D3.3 Datasheets and instruction manuals for agri-PV solutions for demos

Symbiosyst

Horizon Europe EU project
Grant Agreement No. 101096352



Funded by the European Union

Funded by the European Union. Views and opinions expressed are however those of the author(s) only and do not necessarily reflect those of the European Union or CINEA. Neither the European Union nor the granting authority can be held responsible for them. As of 11th of November 2026 this report has been submitted to the EC but its content has not been approved yet

Document control sheet

Project	**SYMBIOSYST – Create a Symbiosis where PV and agriculture can have a mutually beneficial relationship**

Topic identifier	HORIZON-CL5-2022-D3-01-06
Grant Agreement N°	101096352
Coordinator	ACCADEMIA EUROPEA DI BOLZANO (EURAC)
Duration	01/01/2023 – 31/12/2026
Work package N°	WP3
Work package title	Innovative solutions for climate and crop-based reliability and performance of agri-PV
Work package leader	Convert
Task n°	3.3
Task leader	
Document title	Datasheets and instruction manuals for agri-PV solutions for demos
Lead Beneficiary	EF SOLARE ITALIA
Dissemination level	PUBLIC
Authors	Angelo Pignatelli, Pietro Felici
Contributors	Giuseppe Demofonti, Barry Van Marrewijk, James MacDonald, David Caballero Flores, Cinja Seick, Giacomo Bosco, Enrico Dalla Maria, Giovanni Borz, Martin Thalheimer, Walter Guerra, Marcel Macarulla, Ben Browne
Reviewer(s)	Giovanni Borz, Stefano Modugno
Issue date	6/11/2026

History of versions

Version	Date	Author - Beneficiary	Comments
V1.0	15/12/2024	Angelo Pignatelli – EF Solare Italia	Final Draft
V2.0	14/01/2025	David Moser - Eurac	Final review
V3.0	30/01/2026	Pietro Felici – EF Solare	Version to accomplish EC request of revision dated 08/10/2025
V4.0	6/11/2026	Pietro Felici – EF Solare	Version to accomplish EC request of revision dated 02/03/2026

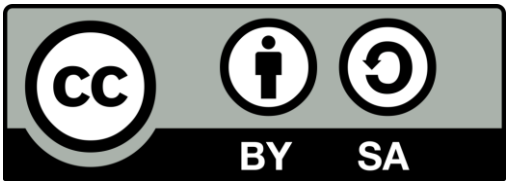

This work is licensed under a Creative Common Attribution-ShareAlike 4.0 International License (CC BY-SA 4.0)

Acknowledgements

The work described in this publication has received funding from the European Union Horizon Europe research and innovation programme under grant agreement Nº 101096352.

Disclaimer

This document reflects only the authors' view and not those of the European Commission or CINEA. This work may rely on data from sources external to the members of the SYMBIOSYST project Consortium. Members of the Consortium do not accept liability for loss or damage suffered by any third party as a result of errors or inaccuracies in such data. The information in this document is provided "as is" and no guarantee or warranty is given that the information is fit for any particular purpose. The user there of uses the information at its sole risk and neither the European Commission, CINEA nor any member of the SYMBIOSYST Consortium is liable for any use that may be made of the information.

Executive Summary

The SYMBIOSYST project, supported by the EC Horizon Europe Programme, aims to bridge the gap between solar energy production and agriculture by developing tailored photovoltaic (PV) solutions for both greenhouse and open-field agriculture across diverse climatic conditions in three nations. The initiative includes the creation of several agri-PV demonstrators, encompassing scenarios from vegetable farming to fruit cultivation with traditional and other training systems under adjustable tracking systems or into greenhouses with roof partially covered by PV modules. In particular the agri-PV demonstrators are:

- Bolzano (Italy) is an open agri-PV demonstrator. It is an open apple orchard combined with a PV tracking system that partially cover the apple trees
- Barcelona (Spain) is an open agri-PV demonstrator. It is an open cultivation of short-stature and trellised seasonal vegetables tomatoes and lettuce combined with a PV tracking system.
- Schipluiden (Netherlands) demonstrator is a greenhouse used to study the diffusion of light through the rooftop in order to run the model to simulate crops and harvest. PV modules are installed on top of the rooftop realizing zones with different transparency factors. In addition, a particular coating is applied on the glass rooftop to increase the light diffusion in the greenhouse.
- Scalea (Italy) demonstrator is an open citrus fruit production, with existing tracker-based PV systems (this is also a demo driver).

Within the SYMBIOSYST project the aim of the Work Package 3 (WP3) is to develop innovative solutions to deliver reliable agri-PV systems, for climate and crop-based reliability and performance of agri-PV.

The scope of this deliverable is to collect all datasheets, instruction manuals for installation, commissioning and tuning of the relevant equipment for agri-PV projects to be installed into the demonstrators. It is recommended to read this deliverable taking into account the executive designs of the demo plants that are described in the deliverable 5.3 of the Working Package number 5.

Moreover the deliverable includes the description of the PAR+ diffusive coating spread on the greenhouse glass roof.

In all the demonstrators it is very important to measure both typical PV electric, environmental, agriculture and light parameters, so also the datasheets of the sensors are included.

The deliverable includes some hints about permitting tasks, procedure request of grid connection, drone flight authorization as well as on-site delivery of the equipment.
Despite of the small size of Bolzano demonstrator, the authorization procedure was particularly complex due to the changing law that happened in the Bolzano province before the project started. Even though the changing law was important as it was intended to allow and simplify the installation of agri-PV demonstrator, we experienced that the actual authorization procedure to be applied in synergy by different public entities involved was not aligned with the changing law, and this occurrence imposed a delay in the process.
Considering the topic of the grid connection the conditions are different for the demonstrators. Bolzano agri-PV plant is not electrically coupled with buildings or other premises whose electricity consumption could be satisfied, even partially, by the PV plant. For this reason Symbiosyst partners had to require a fully new grid connection to the local DSO to inject and sell the energy produced by the PV system and to obtain the energy for auxiliary services when the PV system is not producing.
For Barcelona and Schipluiden demonstrators the PV equipment are coupled to grid in points already used to get the energy needed to feed buildings or other premises belonging to the entities managing the demonstrators. For Barcelona demonstrator some power injection limitation applied, so when the energy produced by the PV system was not fully consumed by the building loads in real time, some energy curtailment applied. The responsible partners successfully issued to the local DSO request to remove the power injection limitation. Scalea open agri-PV system is not connected to the grid because when to request was issued to the local DSO the offered solution was too much demanding in terms of conduit length, delivery time and cost. For this reason Scalea demonstrator was equipped with a BESS system that feeds experimental electrical loads to enable the PV system to work regularly.

Symbiosyst project includes also measurements performed by means of drones. For this reason some hints about flight permission procedures are provided, together with technical information about drone-based measurements and sensors.

To conclude, even if the collected datasheets and the descriptions of the authorization procedures and grid connection are quite project-specific, all this information can be useful to stakeholders interested in launching new agri-PV initiatives.

Abbreviation list

Table 1: Abbreviation list.

Abbreviation	Meaning
1P	PV layout with 1 row of PV modules installed in Portrait mode
AC	Alternating current
Agri-PV/ AV	Agrivoltaics
BEG	Bifacial energy gain
DC	Direct current
DHI	Diffused horizontal irradiance
DLI	Daily light integral
DNI	Direct normal irradiance
E-W	East-West
EOT	Electrical, optical and thermal
FS	Full sun
G_{AV}	Global irradiance for the agrivoltaic system
GCR	Ground cover ratio
GHI	Global horizontal irradiance
GPU	Graphics Processing Unit
G_{ref}	Global irradiance for the reference system
GTI	Global tilted irradiance
HSAT	Horizontal Single-Axis Tracker
kWh/m^2	Kilowatt-hour per square metre
MWh/m^2	Megawatt-hour per square metre
N-S	North-South
PAR	Photosynthetically active radiation
POA	Plane of array
PV	Photovoltaics
T_a	Air temperature
W/m^2	Watts per meter square
Wp	Watt peak
W_s	Wind speed

Table of Contents

Document control sheet 2
Acknowledgements 3
Disclaimer 3
Executive Summary 4
Abbreviation list 6
Table of Contents 7
Index of Figures 8
Index of Tables 8
1. Equipment documentation 9
1.1. Barcelona demonstrator 9
1.1.1. Tracking System Structures (Trackers) 10
1.1.2. Photovoltaic Modules 12
1.1.3. Fixed Agricultural and biological sensors 15
1.1.4. Robot 16
1.2. Bolzano demonstrator 17
1.2.1. Tracking system structures 19
1.2.2. PV Modules 20
1.2.3. Fixed monitoring system 21
1.3. Schipluiden (Netherlands) demonstrator 23
1.3.1. Agricultural Sensors 24
1.3.2. PV modules 25
1.3.3. PAR+ Diffusive Coating 26
1.4. Scalea (CS – Italy) demonstrator 27
2. Project Permitting 28
2.1. Bolzano demonstrator authorization process 28
2.2. Barcelona demonstrator authorization process 29
3. Procedures for Agri-PV plant grid connection 30
3.1. Bolzano demonstrator grid connection procedure 30
3.2. Barcelona and Schipluiden demonstrators grid connection procedures 30
4. Flight permitting and measurements with drones 31
4.1. Permitting procedure for the drone flights 31
4.2. Metrology and sensing solution 32
4.3. Datasheets — drone platforms and sensors 32
5. Logistic aspects 34
6. Annexes 35
7. Conclusion 36
ANNEXES - DATASHEETS of the Barcelona demo 37
ANNEXES - DATASHEETS of the Bolzano demo 239

ANNEXES - DATASHEETS of the Schipluiden demo **439**

ANNEXES - DATASHEETS of the Scalea demo **450**

Index of Figures

Figure 1: Front and upper view of the trackers 11
Figure 2: lateral view of the trackers 12
Figure 3: Standard transparent PV modules datasheet (Aleo Solar) 13
Figure 4: Semi-transparent modules datasheet (Aleo Solar) 14
Figure 5: Fixed sensors in Barcelona demo 15
Figure 6: UPC Robot characteristics 17
Figure 7: Tracker dimensions and scheme 19
Figure 8: 400W Standard transparency modules (Aleo Solar) 20
Figure 9: 40% Transparency modules (Aleo Solar) 21
Figure 10: Fixed monitoring system 22
Figure 11: Each zone containing 9 to 16 sensors placed in a grid-like formation 24
Figure 12: PV module characteristics (Aleo Solar) 25
Figure 13: Fotoniq PAR+ coating main characteristics 26

Index of Tables

Table 1: Abbreviation list. 6
Table 2: List of the equipment of Barcelona demonstrator 9
Table 3: ePAR Sensors characteristics 16
Table 4: Sensors mounted on UPC robot 17
Table 5: List of the equipment for Bolzano demonstrator 18
Table 6: PAR sensors characteristics 23
Table 7: List of the equipment for Schipluiden closed Agri-PV demonstrator 23
Table 8: List of the equipment for Scalea open Agri-PV demonstrator 27
Table 9: Comparison of the two sites 32
Table 10: DJI Matrice 4T features — thermography drone (EURAC-owned, flown for Above's requirements) 32
Table 11: EL survey platform features - Intertek CEA (AePVI) AirLabONE RTK 33

1. Equipment documentation

Symbiosyst demonstrators are composed of both prototypes and standard equipment usually available over the PV or electrical market. For each of the demonstrators along this chapter the list of the equipment is provided. Components like electrical cables, switches and other general electrical equipment are not mentioned.
For each demonstrator, a summary table of all components is shown, of which a complete datasheet will be provided in the Annexes. It is specified here that the first column of the summary tables identifies each datasheet in the Annexes.

Subsequently, the components are briefly discussed to give the reader a brief but comprehensive overview, by dividing them into three subcategories: tracker structures, photovoltaic modules and monitoring system. The latter could be also divided into sensors related to the PV system and those related to the agricultural part, i.e. plants, soil and microclimate. For this publication, it was decided to leave the photovoltaic part to the annexes, apart from the initial table listing all the sensors present.

For some prototypes, not all documentation is currently available, as certain manuals can only be finalized after installation and system tuning. This is due to the non-standard characteristics of the demonstrator plants and the need to adapt the documentation to the final system configuration.

1.1. Barcelona demonstrator

Equipment of Barcelona agrivoltaics demonstrator based on PV tracking system are listed in the table below.

Table 2: List of the equipment of Barcelona demonstrator

Identifier	Type of system	Producer	Model/Type	Prototype / Standard system	Notes
BA.1	Mono-axial -1 P - Tracker (not Hyperstatic)	Valmont – Convert	Agri-Tracker for Barcelona demonstrator	Prototype	
BA.2	Autonomous Robot with sensors	CDEI – UPC Centre de Disseny d'Equips Industriales	CDEI – UPC Autonomous Robot with Sensors	Prototype	
BA.3	PV modules – 400 Wp	Aleo Solar	R'n'D – module Anti Glare 400 W – Type 1 - Premium PV panel	Prototype	"full" module
BA.4	PV modules – 270 Wp	Aleo Solar	R'n'D – module Anti Glare 270 W – Type 2 - Premium PV panel	Customized product	Module with 40% transparency degree
BA.5	Inverter	Brand available on the market (SMA Solar Technology AG)	50 KW power class	Standard product	String inverter with multiple MPPT
BA.6	AGRI e-PAR sensor	Apogee	SQ-618-SS	Standard product	Extended photosynthetically

					active radiation sensor
BA.7	AGRI air temp. sensor AGRI air relative humidity sensor	Epluse	HTP 201 4- 20mA HTP201-M1-A6- E8-KL150	Standard product	Sensor to study the agriculture activity
BA.8	AGRI soil temp. sensor AGRI soil humidity	DeltaOhm	HD3910.1.10	Standard product	Sensor to study the agricultural activity
BA.9	WEATHER air temperature WEATHER air relative humidity	Epluse	HTP 201 4- 20mA HTP201-M1-A6- E8-KL150	Standard product	Weather sensor
BA.10	WEATHER precipitation/rain	Luft	ws100 UMB	Standard product	Weather sensor
BA.11	WEATHER wind speed	PCE	PCE-WS 4-20mA	Standard product	Weather sensor (anemometer)
BA.12	PV irradiance (G_POA) sensor	Hukseflux	SR05-D2A2 pyranometer	Standard product	PV-purpose sensor
BA.13	PV albedo irradiance sensor	Hukseflux	SR05-D2A2 pyranometer	Standard product	PV-purpose sensor
BA.14	PV module temperature	General	PT100 class b	Standard product	PV-purpose sensor

1.1.1. Tracking System Structures (Trackers)

In the Symbiosyst project, two different trackers were developed for Agri-PV applications by Convert, tailored to the needs of the two Demo plants in the project: Demo in Ora/Bolzano and Demo in Barcelona.
The two developed trackers are different in terms of the track frame, while they are completely similar in terms of the mechanical handling part, the power supply system, the control system and the weather sensors.
More in detail:

- the structure of both trackers is innovative in shape and in many design solutions,
- the part concerning movement, power supply and control, refers to solutions already used to some extent by Convert in its standard trackers

The Trackers power supply, movement control and handling is a system composed of many different devices:

1. QCC or Central Control Switchboard: it is the control unit (PLC) embedding all the functions that allow the monitoring and the control of the entire solar power plant (SCADA).
2. QP or Remote Switchboard: it is a local unit that acts as an extension of the QCC, enabling to add additional weather sensors and/or to control one or more subfields.
3. PS or Power Switchboard: It is connected to LV or auxiliary transformers and is responsible to supply all the DS within the subfield.
4. DS or Distribution Switchboard: it is supplied by the PS and is responsible to supply the power and the communication to all the actuators connected to it.
5. Sensors: provide useful information and enable to set strategies for the safety of the entire system and optimal tracking.
6. Accessories: their existence depend on the PV plant requirements. For instance, whether wireless antenna (WLAN) are optional devices, they may become mandatory for a specific architecture, used for redundancy in case fiber optic is in use or to reach isolated portions of a plant.

The auxiliary sensor system for tracker movement essentially consists of:

- Anemoscope (Wind Direction)
- Anemometer (Wind Speed)
- Snow sensor
- Irradiance sensor (Pyranometer)
- GPS
- Ultrasonic wind sensor

The following figures show the general dimensions of the structures for the Barcelona demonstrator. The main difference between the trackers used for the various demonstrators are the different minimum heights, which are measured by considering the minimum height of the PV module edge at the maximum tracker angle. This is done to best adapt to the various crops. In the case of the Barcelona demo, the minimum height is 2.22 m.

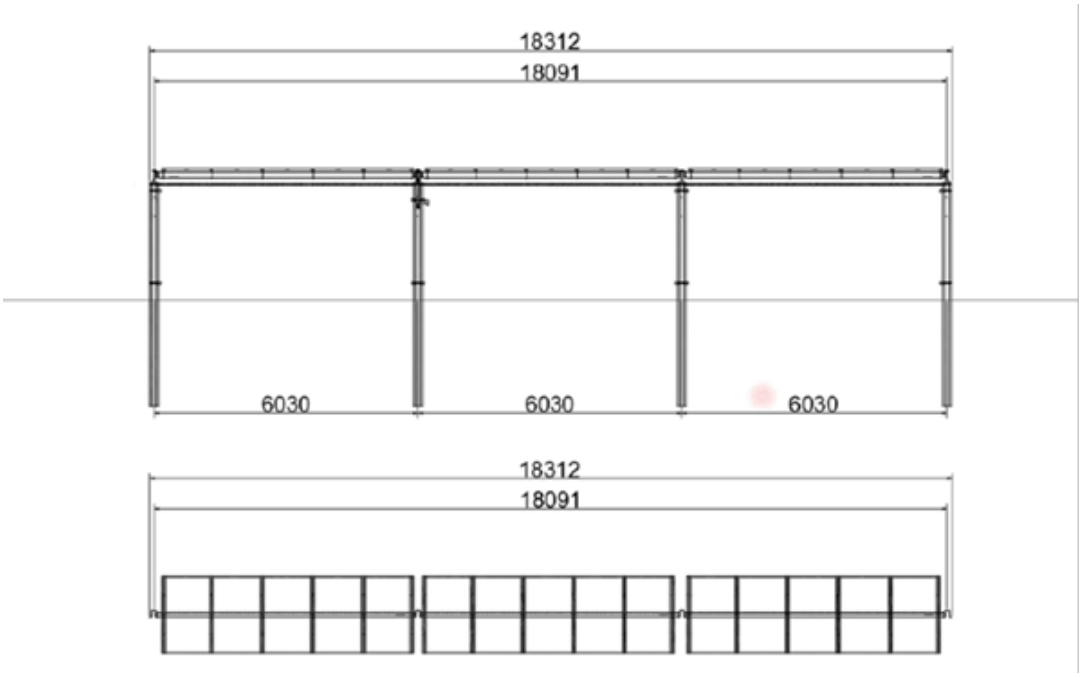

Figure 1: Front and upper view of the trackers

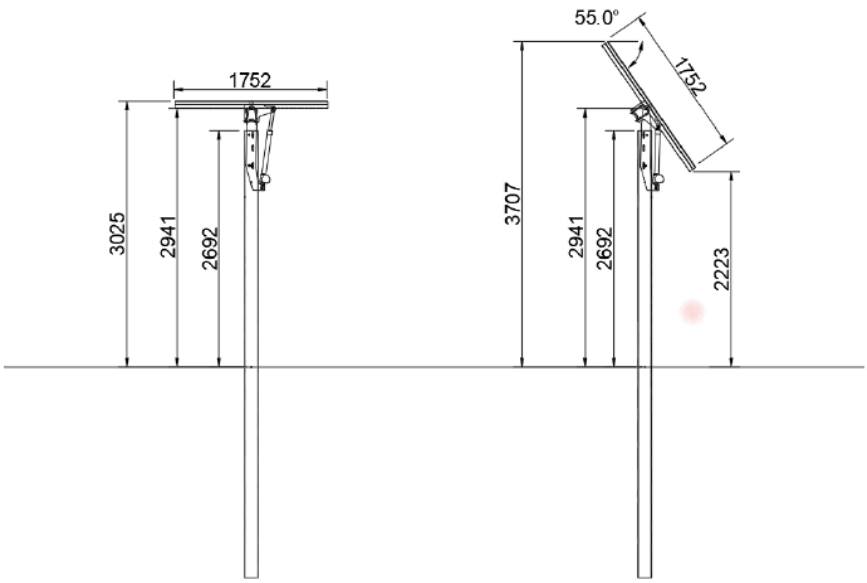

Figure 2: lateral view of the trackers

1.1.2. Photovoltaic Modules

Two types of photovoltaic bifacial modules were chosen for the Barcelona demonstrator, one with a transparency degree of less than 10% and one with a transparency degree of 40%. The special feature of the modules developed by Aleo Solar specifically for the Barcelona demo is the presence of an anti-glare layer. Due to the proximity of the installation to Barcelona-El Prat Airport, the PV system was designed with particular attention to reducing reflected radiation, favouring low-reflectance solutions.

Figures 3 and 4 summarise the characteristics of the two types of modules utilized.

DIMENSIONS [mm]

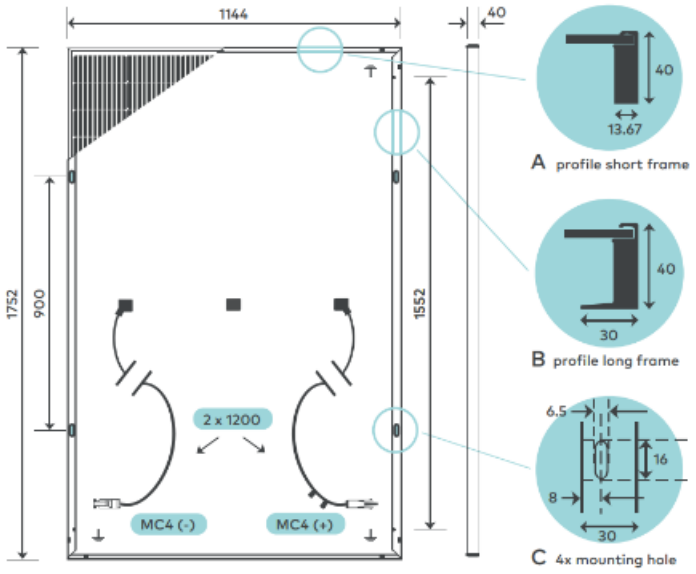

BASIC MODULE DATA		
Length x width x height	[mm]	1752 x 1144 x 40
Weight	[kg]	22
Number of cells		108
Cell size	[mm]	182 x 91
Cell material		Monocrystalline Si, PERC
Number of Busbars		10
Front sheet		3.2 mm Solar glass (TSG) with anti-reflective coating, minimal reflection
Back sheet		Polymer sheet, transparent
Frame material		Al alloy, black

BASIC DATA JUNCTION BOX		
Parts of junction box acc. to IEC 62790	[mm]	left & right: 62 x 58 x 14 middle: 49 x 55 x 14
Bypass diodes		3 (one per box)
IP class		IP68
Cable	[mm]	1200 (+), 1200 (-) acc. to EN 50618
Connectors		genuine MC4 acc. to EN 62852

ELECTRICAL DATA (STC)			TYPE 1
Rated power	P_{MPP}	[W]	400
Rated voltage	V_{MPP}	[V]	31.5
Rated current	I_{MPP}	[A]	12.7
Open-circuit voltage	V_{OC}	[V]	37.6
Short-circuit current	I_{SC}	[A]	13.1
Efficiency	η	[%]	20.0

Electrical values measured under standard test conditions (STC): 1000 W/m²; 25 °C; AM 1.5

CLASSIFICATION		
Classification range (positive classification)	[W]	0/+9.99

ELECTRICAL DATA (LOW IRRADIANCE)			TYPE 1
Power	P_{MPP}	[W]	77.6

Electrical values measured under: 200 W/m²; 25 °C; AM 1.5
Measurement tolerance of P_{MPP} under STC -3/+3 %; Accuracy of other electrical values -10/+10 %
Efficiency related to gross module area

TEMPERATURE COEFFICIENTS			
Temperature coefficient I_{SC}	α (I_{SC})	[%/K]	+0.03
Temperature coefficient V_{OC}	β (V_{OC})	[%/K]	-0.26
Temperature coefficient P_{MPP}	Y (P_{MPP})	[%/K]	-0.34

REFLECTION PROPERTIES									
Angle	[deg.]	10	20	30	40	50	60	70	80
Luminance	[cd/m²]	1.0E+04	1.1E+04	1.1E+04	1.7E+04	3.0E+04	8.9E+04	3.4E+05	3.5E+06
Partial reflection factor	[%]	0.001	0.001	0.001	0.001	0.002	0.006	0.021	0.219

Figure 3: Standard transparent PV modules datasheet (Aleo Solar)

DIMENSIONS [mm]

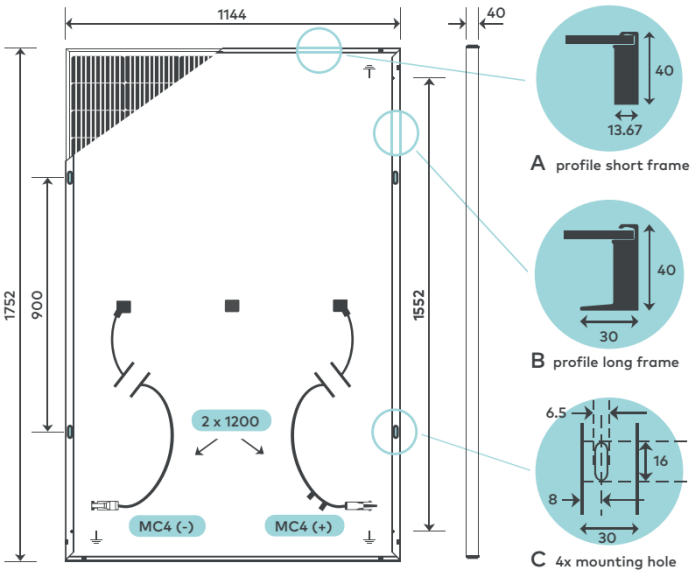

BASIC MODULE DATA

Length x width x height	[mm]	1752 x 1144 x 40
Weight	[kg]	22
Number of cells		72
Cell size	[mm]	182 x 91
Cell material		Monocrystalline Si, PERC
Number of Busbars		10
Front sheet		3.2 mm Solar glass (TSG) with anti-reflective coating, minimal reflection
Back sheet		Polymer sheet, transparent
Frame material		Al alloy, black

BASIC DATA JUNCTION BOX

Parts of junction box acc. to IEC 62790	[mm]	left & right: 62 x 58 x 14
Bypass diodes		2 (one per box)
IP class		IP68
Cable	[mm]	1200 (+), 1200 (-) acc. to EN 50618
Connectors		genuine MC4 acc. to EN 62852

ELECTRICAL DATA (STC)

			TYPE 2
Rated power	P_{MPP}	[W]	270
Rated voltage	V_{MPP}	[V]	21.1
Rated current	I_{MPP}	[A]	12.8
Open-circuit voltage	V_{OC}	[V]	25.2
Short-circuit current	I_{SC}	[A]	13.2
Efficiency	η	[%]	13.5

Electrical values measured under standard test conditions (STC): 1000 W/m²; 25 °C; AM 1.5

CLASSIFICATION

Classification range (positive classification)	[W]	0/+9.99

ELECTRICAL DATA (LOW IRRADIANCE)

			TYPE 2
Power	P_{MPP}	[W]	52.4

Electrical values measured under: 200 W/m²; 25 °C; AM 1.5
Measurement tolerance of P_{MPP} under STC -3/+3 %; Accuracy of other electrical values -10/+10 %
Efficiency related to gross module area

TEMPERATURE COEFFICIENTS

Temperature coefficient I_{SC}	α (I_{SC})	[%/K]	+0.03
Temperature coefficient V_{OC}	β (V_{OC})	[%/K]	-0.26
Temperature coefficient P_{MPP}	Y (P_{MPP})	[%/K]	-0.34

REFLECTION PROPERTIES

Angle	[deg.]	10	20	30	40	50	60	70	80
Luminance	[cd/m²]	1.0E+04	1.1E+04	1.1E+04	1.7E+04	3.0E+04	8.9E+04	3.4E+05	3.5E+06
Partial reflection factor	[%]	0.001	0.001	0.001	0.001	0.002	0.006	0.021	0.219

Reflection properties measured independently by an external surveyor

Figure 4: Semi-transparent modules datasheet (Aleo Solar)

1.1.3. Fixed Agricultural and biological sensors

The fixed monitoring system developed for this demo considers both the photovoltaic and agricultural parts of the agrivoltaic system. The sensors mounted in the Barcelona demo are schematised in Figure 5.

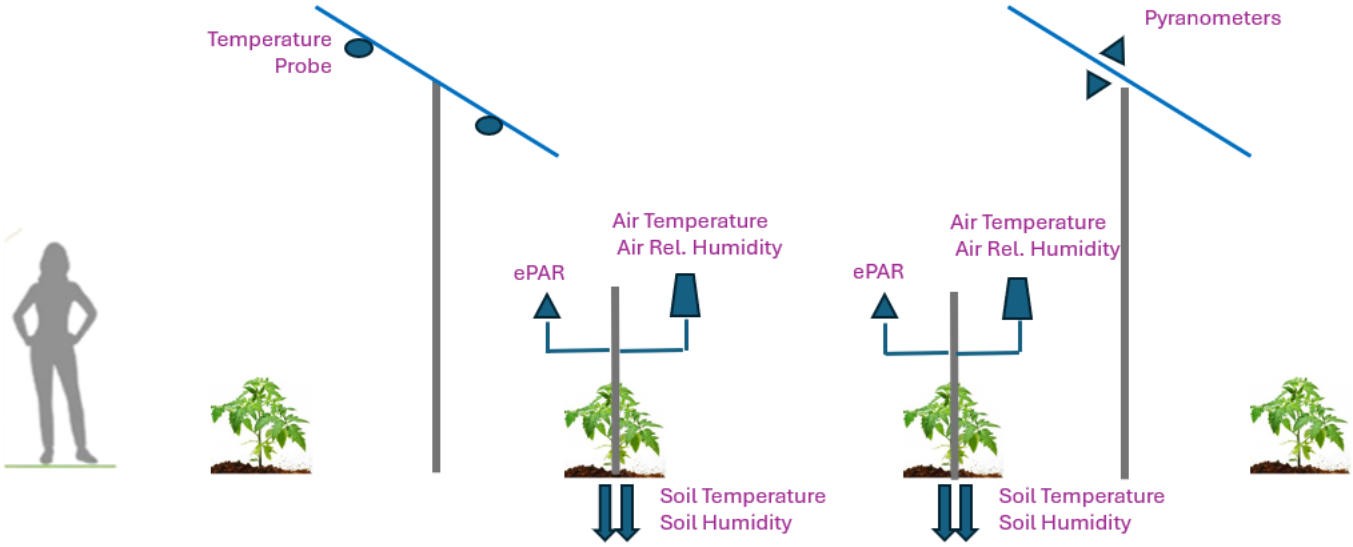

Figure 5: Fixed sensors in Barcelona demo

With regard to the datasheets of the fixed sensors prepared for the Symbiosyst project, please refer to the attached documentation in the separate annexes. The ePAR (effective Active Radiation for Photosynthesis) sensors is the sensor that monitors the radiation incident on plants, which is responsible for the biological differences that can take place in an advanced agrivoltaic plant compared to a traditional agricultural plant. Table 3 shows the specifications of the ePAR sensors used in the Spanish Symbiosyst demo. These sensors are manufactured by Apogee Instruments.

SPECIFICATIONS

	SQ-618-SS
Input Voltage	5.5 to 24 V DC
Average Max Current Draw	RS-232 37 mA; RS-485 quiescent 37 mA, active 42 mA
Calibration Factor	Custom for each sensor and stored in the firmware
Calibration Uncertainty	± 5 % (see calibration Traceability below)
Measurement Repeatability	Less than 1 % (up to 4000 µmol m^{-2} s^{-1})
Long-term Drift (Non-stability)	Less than 2 % per year
Non-linearity	Less than 1 % (up to 4000 µmol m^{-2} s^{-1})
Field of View	180°
Spectral Range	383 to 757 nm ± 5 nm (wavelengths where response is greater than 50 %)
Directional (Cosine) Response	± 2 % at 45° zenith angle, ± 5 % at 75° zenith angle (see Directional Response below)
Azimuth Error	Less than 0.5 %
Tilt Error	Less than 0.5 %
Temperature Response	-0.11 ± 0.04 % per C (see Temperature Response below)
Uncertainty in Daily Total	Less than 5 %
Detector	Blue-enhanced silicon photodiode
Housing	Anodized aluminum body with acrylic diffuser
IP Rating	IP68
Operating Environment	-40 to 70 C; 0 to 100 % relative humidity; can be submerged in water up to depths of 30 m
Dimensions	30.5 mm diameter, 37 mm height
Mass (with 5 m of cable)	140 g
Cable	5 m of shielded, twisted-pair wire; TPR jacket (high water resistance, high UV stability, flexibility in cold conditions); pigtail lead wires; stainless steel (316), M8 connector

Table 3: ePAR Sensors characteristics

1.1.4. Robot

At Symbiosyst Spanish demo in Barcelona, researchers of UPC also developed a robot equipped with a complete sensor system for monitoring an agrivoltaic plant. The development of the robot is one of Symbiosyst goals. Please refer to the annexes for the complete documentation, but general information is presented in the main text. Figure 6 summarises the characteristics, both in terms of size and mounted sensors, of the robot. The table 4 shows the sensors mounted on the robot with a brief description.

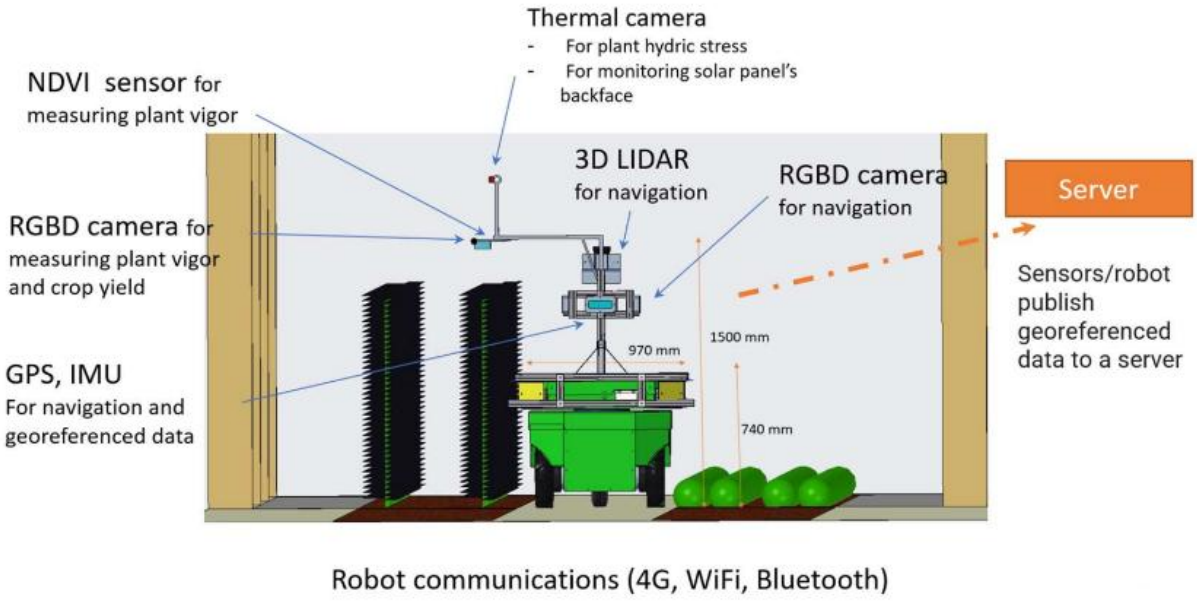

Figure 6: UPC Robot characteristics

Sensor	Function	Description
Intel RealSense D457 RGB-D Camera	Navigation and plant monitoring	Combines high-resolution RGB imaging and depth sensing to create 3D models, enabling spatial awareness and object detection.
Optris Xi 400 Thermal Camera	Crop and solar panel temperature monitoring	Captures temperature variations to detect water stress in plants (e.g., CWSI) and overheating in photovoltaic panels.
Integrated thermometer	Environmental monitoring	Measures ambient temperature and wet bulb temperature for analyzing environmental conditions.
ACS-211 Crop Circle Sensor	Crop health assessment	Measures plant reflectance at 670 nm and 780 nm to calculate NDVI and 3DNDVI indices for crop vigor and health.
LIDAR (Light Detection and Ranging)	Navigation and mapping	Generates detailed point clouds for precise environmental mapping, navigation, and obstacle avoidance.
IMU (Inertial Measurement Unit)	Navigation stabilization and motion tracking	Provides real-time orientation and motion data by tracking accelerations and rotational velocities.
GNSS (Global Navigation Satellite System)	Geolocation and path tracking	Ensures accurate positioning and heading estimation, optimizing field coverage with RTK corrections when available.

Table 4: Sensors mounted on UPC robot

1.2. Bolzano demonstrator

As far as the Bolzano demonstrator is concerned, the main differences compared to the Barcelona installation lie in the increased height of the tracker beam and the use of photovoltaic modules without an anti-glare coating. Furthermore, additional structural elements positioned orthogonally to the tracker axis were incorporated to enhance the system's resistance to lateral wind loads. This structural reinforcement constitutes a further distinction from the tracker configuration adopted at the Barcelona demonstrator.

Equipment of the Bolzano agrivoltaic demonstrator based on PV tracking system are listed in the table below.

Table 5: List of the equipment for Bolzano demonstrator

Identifier	Type of system	Producer	Model/Type	Prototype / Standard system	Notes
BO.1	Mono-axial -1 P - Tracker (hyperstatic)	Valmont – Convert	Agri-Tracker for Bolzano demonstrator	Prototype	
BO.2	PV modules – 400 Wp	Aleo Solar	R'n'D – module 400 W – Type 1 - Premium PV panel	Prototype	"full" module
BO.3	PV modules – 270 Wp	Aleo Solar	R'n'D – module 270 W – Type 2 - Premium PV panel	Customized product	Semi-transparent module
BO.4	Inverter	Brand available on the market (Huawei)	30 KW, 25 kW and 15 KW power classes	Standard product	String inverter with multiple MPPT
BO.5	AGRI PAR sensor	Apogee	SQ-202X-SS	Standard product	Photosynthetically active radiation sensor
BO.6	AGRI air temp. sensor AGRI air relative humidity sensor	Epluse	HTP 201 4- 20mA HTP201-M1-A6- E8-KL150	Standard product	Sensor to study the agricultural activity
BO.7	AGRI soil temp. sensor AGRI soil humidity	DeltaOhm	HD3910.1.10	Standard product	Sensor to study the agricultural activity
BO.8	WEATHER air temperature WEATHER air relative humidity	Epluse	HTP 201 4- 20mA HTP201-M1-A6- E8-KL150	Standard product	Weather sensor
BO.9	WEATHER precipitation/rain	Luft	ws100 UMB	Standard product	Weather sensor
BO.10	WEATHER wind speed	PCE	PCE-WS 4-20mA	Standard product	Weather sensor (anemometer)
BO.11	PV irradiance (G_POA) sensor	Hukseflux	SR05-D2A2 pyranometer	Standard product	PV-purpose sensor
BO.12	PV albedo irradiance sensor	Hukseflux	SR05-D2A2 pyranometer	Standard product	PV-purpose sensor
BO.13	PV module temperature	General	PT100 class b	Standard product	PV-purpose sensor

1.2.1. Tracking system structures

The height of the tracker structure developed by Convert for the Bolzano demo was defined, together with researchers from Laimburg, to allow the passage of agricultural machinery, while also leaving space for anti-hail nets and anti-frost system. In addition to this, the structure designed for this demo features orthogonal beams that make the structure more rigid. This modification was made following wind tunnel studies, which showed a greater load on the poles. The dimensions of the trackers developed for Bolzano are shown in the figure 7. The minimum height is around 3.5m.

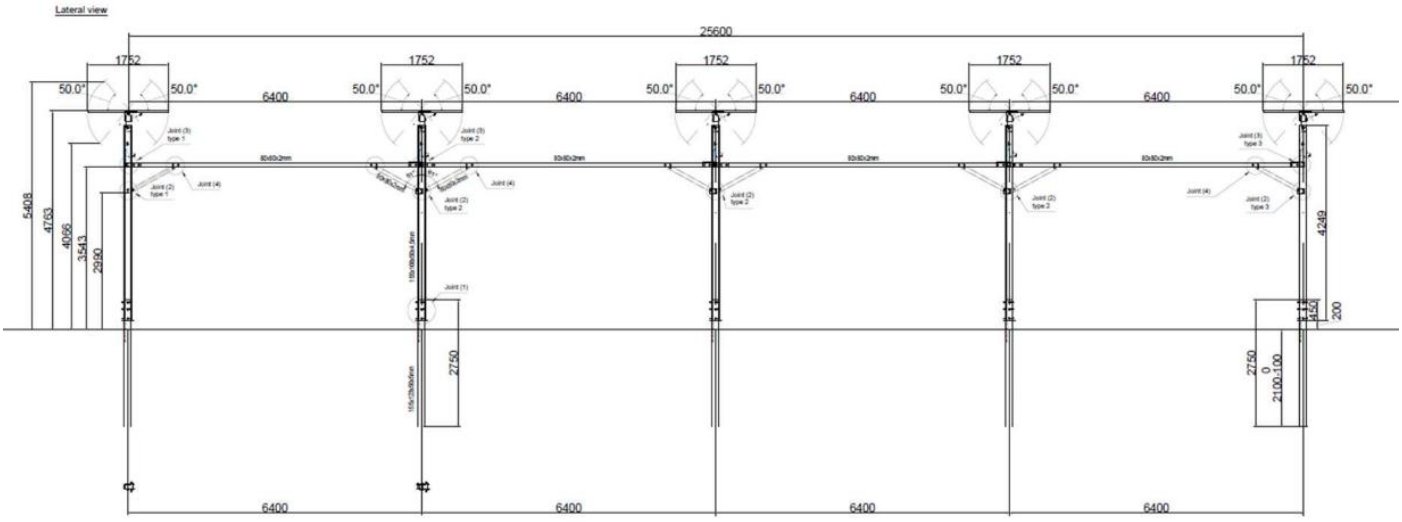

Figure 7: Tracker dimensions and scheme

1.2.2. PV Modules

For the Bolzano demo, Aleo Solar developed modules with standard transparency, less than 10 per cent, and with 40 per cent transparency. In this case, unlike the Spanish demo, an anti-glare layer was not included. Figures 8 and 9 show the datasheets of the two module types.

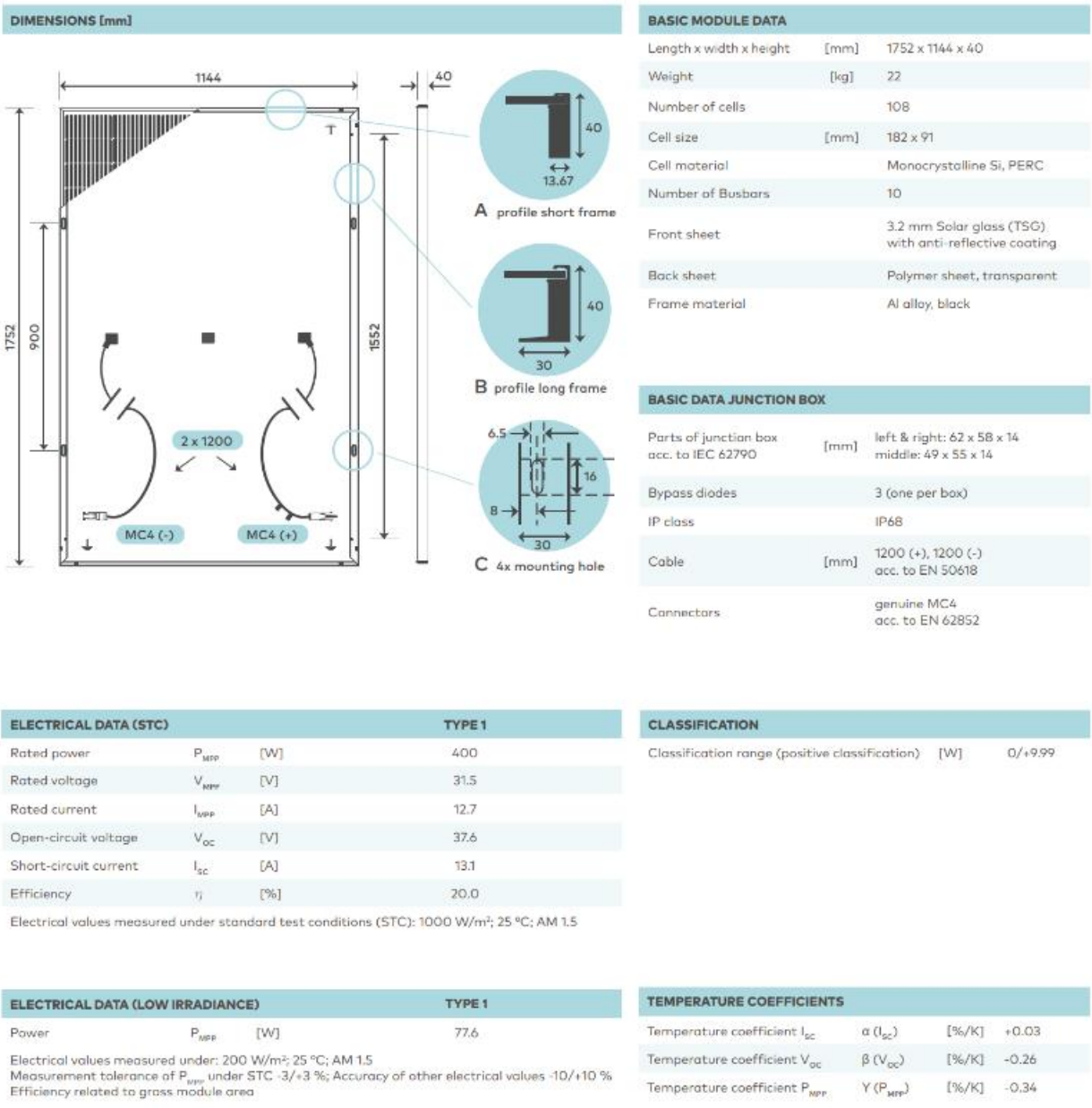

DIMENSIONS [mm]

BASIC MODULE DATA

Length x width x height	[mm]	1752 x 1144 x 40
Weight	[kg]	22
Number of cells		108
Cell size	[mm]	182 x 91
Cell material		Monocrystalline Si, PERC
Number of Busbars		10
Front sheet		3.2 mm Solar glass (TSG) with anti-reflective coating
Back sheet		Polymer sheet, transparent
Frame material		Al alloy, black

BASIC DATA JUNCTION BOX

Parts of junction box acc. to IEC 62790	[mm]	left & right: 62 x 58 x 14 middle: 49 x 55 x 14
Bypass diodes		3 (one per box)
IP class		IP68
Cable	[mm]	1200 (+), 1200 (-) acc. to EN 50618
Connectors		genuine MC4 acc. to EN 62852

ELECTRICAL DATA (STC)

			TYPE 1
Rated power	P_{MPP}	[W]	400
Rated voltage	V_{MPP}	[V]	31.5
Rated current	I_{MPP}	[A]	12.7
Open-circuit voltage	V_{OC}	[V]	37.6
Short-circuit current	I_{SC}	[A]	13.1
Efficiency	η	[%]	20.0

Electrical values measured under standard test conditions (STC): 1000 W/m²; 25 °C; AM 1.5

CLASSIFICATION

Classification range (positive classification)	[W]	0/+9.99

ELECTRICAL DATA (LOW IRRADIANCE)

			TYPE 1
Power	P_{MPP}	[W]	77.6

Electrical values measured under: 200 W/m²; 25 °C; AM 1.5
Measurement tolerance of P_{MPP} under STC -3/+3 %; Accuracy of other electrical values -10/+10 %
Efficiency related to gross module area

TEMPERATURE COEFFICIENTS

Temperature coefficient I_{SC}	α (I_{SC})	[%/K]	+0.03
Temperature coefficient V_{OC}	β (V_{OC})	[%/K]	-0.26
Temperature coefficient P_{MPP}	γ (P_{MPP})	[%/K]	-0.34

Figure 8: 400W Standard transparency modules (Aleo Solar)

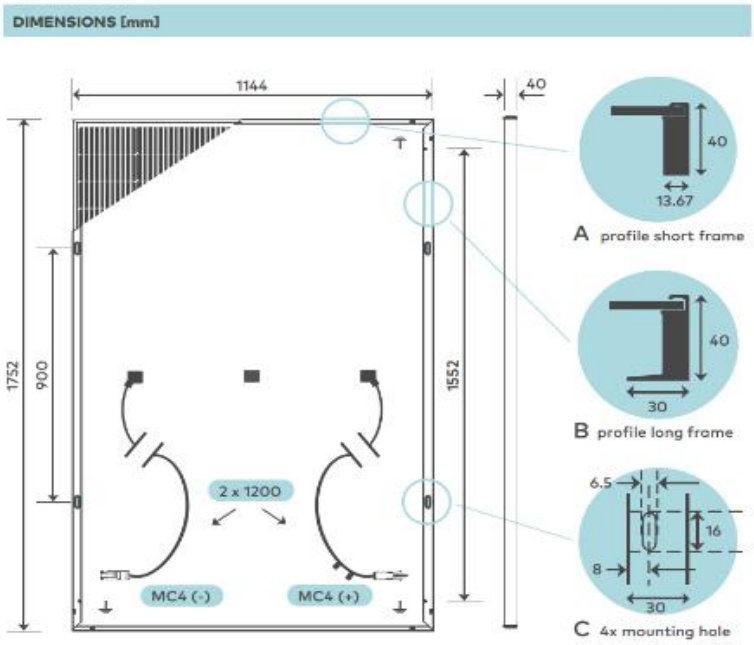

BASIC MODULE DATA		
Length x width x height	[mm]	1752 x 1144 x 40
Weight	[kg]	22
Number of cells		72
Cell size	[mm]	182 x 91
Cell material		Monocrystalline Si, PERC
Number of Busbars		10
Front sheet		3.2 mm Solar glass (TSG) with anti-reflective coating
Back sheet		Polymer sheet, transparent
Frame material		Al alloy, black

BASIC DATA JUNCTION BOX		
Parts of junction box acc. to IEC 62790	[mm]	left & right: 62 x 58 x 14
Bypass diodes		2 (one per box)
IP class		IP68
Cable	[mm]	1200 (+), 1200 (-) acc. to EN 50618
Connectors		genuine MC4 acc. to EN 62852

ELECTRICAL DATA (STC)			TYPE 2
Rated power	P_{MPP}	[W]	270
Rated voltage	V_{MPP}	[V]	21.1
Rated current	I_{MPP}	[A]	12.8
Open-circuit voltage	V_{OC}	[V]	25.2
Short-circuit current	I_{SC}	[A]	13.2
Efficiency	η	[%]	13.5

Electrical values measured under standard test conditions (STC): 1000 W/m²; 25 °C; AM 1.5

CLASSIFICATION		
Classification range (positive classification)	[W]	0/+9.99

ELECTRICAL DATA (LOW IRRADIANCE)			TYPE 2
Power	P_{MPP}	[W]	52.4

Electrical values measured under: 200 W/m²; 25 °C; AM 1.5
Measurement tolerance of P_{MPP} under STC -3/+3 %; Accuracy of other electrical values -10/+10 %
Efficiency related to gross module area

TEMPERATURE COEFFICIENTS			
Temperature coefficient I_{SC}	α (I_{SC})	[%/K]	+0.03
Temperature coefficient V_{OC}	β (V_{OC})	[%/K]	-0.26
Temperature coefficient P_{MPP}	γ (P_{MPP})	[%/K]	-0.34

Figure 9: 40% Transparency modules (Aleo Solar)

1.2.3. Fixed monitoring system

For this demo, the fixed monitoring system, developed by EURAC following the indications of the other partners, is used to monitor the system as a whole (PV and agricultural part), as well as to validate the models for simulation. In the following figure, the monitoring system is schematised; it can be seen that in this case the PAR is measured at two different heights. It is also noticeable that the PAR sensors used in this demo have a different and more limited spectral range, switching from ePAR (Effective Photosynthetically Active Radiation, 380-750) to PAR (Photosynthetically Active Radiation, 370-650 nm). This choice came about as a result of requests from the various teams involved in the agricultural part.

For a complete description of the fixed monitoring system, please refer to deliverable 5.2, and for the complete datasheets, please refer to the Annexes.

Figure 10 shows the diagram of the monitoring system, while Table 6 shows the characteristics of the PAR sensor

mounted in the Bolzano demo.

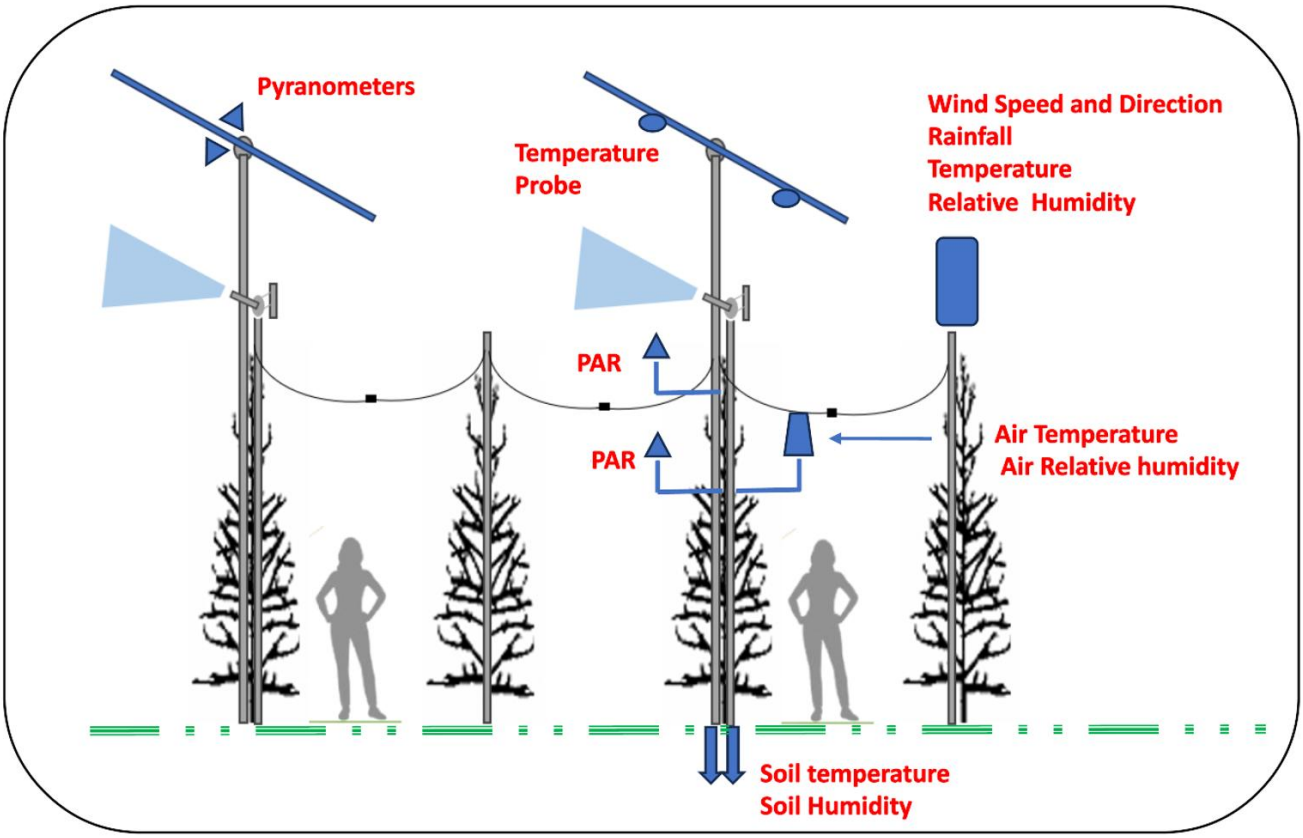

Figure 10: Fixed monitoring system

Specifications — SQ-202X-SS

Parameter	SQ-202X-SS
Power Supply	5 to 24 V DC; nominal current draw 300 µA
Output Sensitivity	0.6 mV per µmol m^{-2} s^{-1}
Calibration Factor (Reciprocal of Sensitivity)	1.6 µmol m^{-2} s^{-1} per mV
Calibrated Output Range	0 to 2.5 V
Calibration Uncertainty	± 5%
Measurement Repeatability	Less than 0.5%
Long-term Drift (Non-stability)	Less than 2% per year
Non-linearity	Less than 1% (up to 4000 µmol m^{-2} s^{-1})
Response Time	Less than 1 ms
Field of View	180°
Spectral Range	370 to 650 nm (response > 50% of maximum)
Directional (Cosine) Response	± 5% at 75° zenith angle
Temperature Response	0.06 ± 0.06% per °C
Operating Environment	−40 to 70°C; 0 to 100% RH; submersible to 30 m
Dimensions	30.5 mm diameter, 37 mm height
Mass (with 5 m cable)	140 g
Cable	5 m shielded twisted-pair, TPR jacket, stainless steel (316) M8 connector

Table 6: PAR sensors characteristics

1.3. Schipluiden (Netherlands) demonstrator

Equipment of Schipluiden agrivoltaic demonstrator based on greenhouse are listed in the table below.

Table 7: List of the equipment for Schipluiden closed Agri-PV demonstrator

Identifier	Type of system	Producer	Model/Type	Prototype / Standard system	Notes
NE.1	PV modules – 360 Wp	Aleo Solar	R'n'D – module Anti Glare 360 W - Premium PV panel for GreenHouses	Customized product	Non-transparent White backsheet with high reflectivity module
NE.2	PAR+ diffusive coating	Fotoniq	PAR+ Diffusive Product	Customized product	Coating for glasses of greenhouses

NE.3	Inverter	Brand available on the market (SMA	50 KW power class	Standard product	String inverter with multiple MPPT
NE.4	Daily Light Integral (DLI) sensors	Quantified Sensor Technology	Firefly platform sensor node FF02	Standard product	Measurement of the light during one day

1.3.1. Agricultural Sensors

No crops were cultivated in the Schipluiden greenhouse. The greenhouse was used to characterise indoor and outdoor light and environmental conditions and to provide input data for modelling prospective crop responses. A grid of 90 PAR (Photosynthetically Active Radiation)/DLI (Daily Light Integral) sensors was installed;
Each zone comprises 9 to 16 sensors positioned in a grid-like formation, as demonstrated in Figure 11 in which some of the Quantified sensors are depicted in an empty greenhouse.

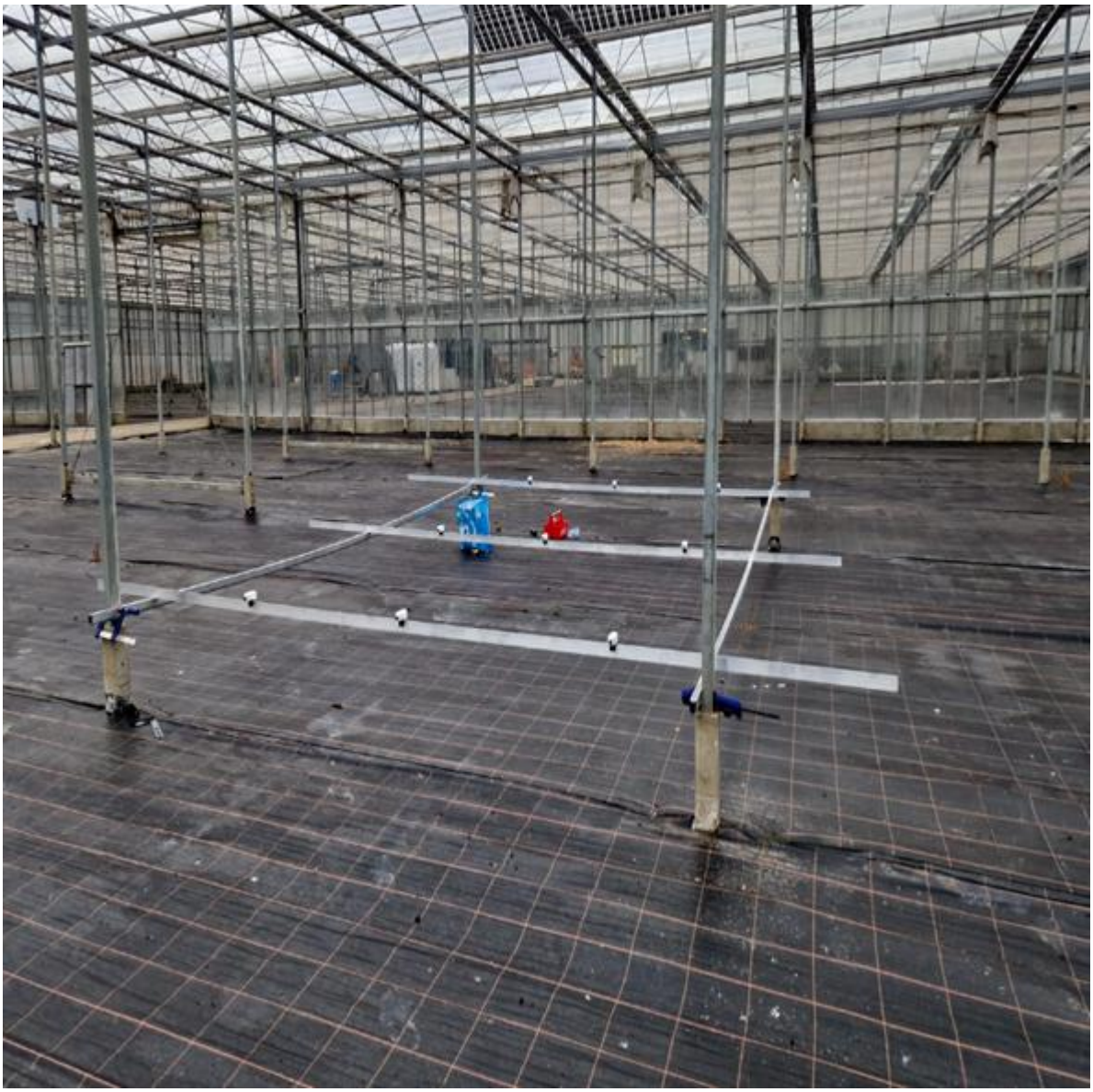

Figure 11: Grid-like arrangement of PAR/DLI sensors in the Schipluiden greenhouse, with 9 to 16 sensors per zone

1.3.2. PV modules

Aleo Solar developed modules specifically for greenhouse application. This PV model type supports the following features:

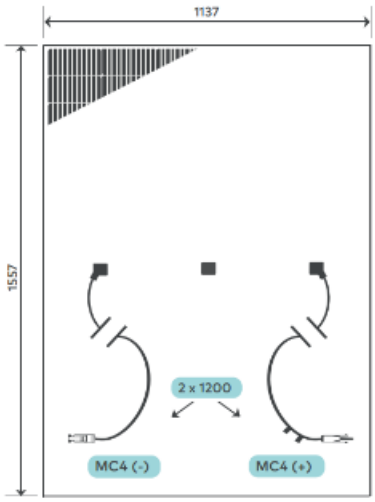

ELECTRICAL DATA (STC)			
Rated power	P_{MPP}	[W]	360
Rated voltage	V_{MPP}	[V]	27.85
Rated current	I_{MPP}	[A]	12.92
Open-circuit voltage	V_{OC}	[V]	33.06
Short-circuit current	I_{SC}	[A]	13.53
Efficiency	η	[%]	20.3

Electrical values measured under standard test conditions (STC): 1000 W/m²; 25 °C; AM 1.5

BASIC MODULE DATA		
Length x width x height	[mm]	1557 x 1137 x 5
Weight	[kg]	18
Number of cells		96
Cell size	[mm]	182 x 91
Cell material		Monocrystalline Si, PERC
Number of Busbars		10
Front sheet		3.2 mm Solar glass (TSG) with anti-reflective coating
Back sheet		Polymer sheet, white
Frame material		Frameless

ELECTRICAL DATA (LOW IRRADIANCE)			
Power	P_{MPP}	[W]	70

Electrical values measured under: 200 W/m²; 25 °C; AM 1.5
Measurement tolerance of P_{MPP} under STC -3/+3 %
Accuracy of other electrical values -10/+10 %
Efficiency relating to gross module area

BASIC DATA JUNCTION BOX		
3 parts junction box acc. to IEC 62790	[mm]	left & right: 62 x 58 x 14 middle: 49 x 55 x 14
Bypass diodes		3 (one per box)
IP class		IP68
Cable	[mm]	1200 (+), 1200 (-) acc. to EN 50618
Connectors		genuine MC4 acc. to EN 62852

CLASSIFICATION		
Classification range (positive classification)	[W]	0/+9.99

TEMPERATURE COEFFICIENTS			
Temperature coefficient I_{SC}	α (I_{SC})	[%/K]	+0.03
Temperature coefficient V_{OC}	β (V_{OC})	[%/K]	-0.26
Temperature coefficient P_{MPP}	γ (P_{MPP})	[%/K]	-0.34

Figure 12: PV module characteristics (Aleo Solar)

- smaller size than those usually sold to the market to be integrated into the existing steel frame of the greenhouse structure
- Unframed format to be compatible with the existing fastening systems of the Schipluiden greenhouse structure
- Non-transparent white backsheet with high reflectivity, 87%, in the 420-700 nm wavelength range, so

corresponding to PAR (Photosynthetic Active Radiation).

1.3.3. PAR+ Diffusive Coating

The greenhouse rooftop was equipped with a diffusive coating.
Diffuse light penetrates deeper into the crop, resulting in more photosynthesis in the plant. This coating was sprayed on the glass rooftop by means of a particular tool that simplified and made safer the technician's job.
Figure 13 shows the main characteristics of the coating layer, please refer to the Annexes for the complete datasheet.

Product description	PAR+ is a durable and sprayable coating that brings diffusivity inside your greenhouse year-round without losing grow light (PAR). Diffuse light penetrates deeper into the crop, resulting in more photosynthesis in the plant.	
Intended use	Intended for exterior greenhouse covers. It does not have to be removed at the end of the season due to its 8-year durability.	
Technical specifications	Hortiscatter	: 35 ± 10%
	Hemispherical transmission[1]	: 80 ± 1%
	Dry thickness	: 35 ± 10 µm
	Durability	: Guaranteed ≥ 5 years
	Chalk compatible	: Yes
	Cleanable	: Yes, resistant to common cleaning agents
	[1]On a 4-mm low-iron clear glass	
Effect on crops	The diffuse light results in a more even light and temperature distribution in the greenhouse, both horizontally and vertically. The improved distribution dampens the i) peak light intensities and ii) peak temperatures, and removes any shading that is created by the greenhouse structure. This allows the plant to use the available light more efficiently and delays the moment at which the plant reaches water stress due to the lower plant temperature under the coating.	

Figure 13: Fotoniq PAR+ coating main characteristics

It's worth highlighting that the datasheet contains the intended performance specifications of the PAR+ coating under the recommended application conditions. In particular for retrofitting solutions, so when the product is applied to the exterior of greenhouses, its final performance can be influenced by factors that are partially outside the coating vendor's control, such as sudden weather changes during application, site-specific conditions, or variations in the spraying process. In the case of the Schipluiden demonstrator, the coating was successfully applied.

1.4. Scalea (CS – Italy) demonstrator

The Scalea demonstrator consists of a retrofitted agrivoltaic system installed over a citrus orchard and operated by EF Solare Italia. The intervention involved the upgrade of an existing photovoltaic plant through the replacement and revamping of the PV modules. In addition, the site is equipped with a comprehensive monitoring **system**, including environmental and agronomic sensors, to assess and analyse the microclimatic conditions generated by the presence of the photovoltaic modules and supporting structures.

Table 8: List of the equipment for Scalea open Agri-PV demonstrator

Identifier	Type of system	Producer	Model/Type	Prototype / Standard system	Notes
SC.1	Mono-axial -1 P - Tracker	Valmont – Convert	Agri-Tracker for Scalea demonstrator	Prototype	Scalea prototype is the legacy version of Bolzano/Barcelona trackers
SC.2	PV modules – 550 Wp	JA Solar	JAM72D30 550/MB	Standard	"full" module bifacial
SC.3	Inverter with BESS capability with its battery	Brand available on the market (Zucchetti)	17 KW power classes	Standard product	String inverter with multiple MPPT
SC.4	AGRI PAR sensor	Apogee	SQ-514	Standard product	Photosynthetically active radiation sensor
SC.5	AGRI soil humidity	Gropoint	Lite	Standard product	Sensor to study the agricolture activity
SC.6	Meteo Station and sensors	µMETOS and Talgil sensors	NB-oT	Standard product	Meteo station to study agri-PV environment
SC.7	Matric potential	Teros	21	Standard product	Sensor to study the agricolture activity
SC.8	Dendrometer	Ecomatik	DD-21	Standard product	Sensor to study the agricolture activity
SC.9	Soil Temperature	Juno	PT 100 sensor	Standard product	Sensor to study the agricolture activity

2. Project Permitting

Typically, stakeholders interested in Agri-PV initiatives include medium to large-scale farmers and investors focused on renewable energy who also wish to support agricultural activities. These investors are often drawn to Agri-PV projects that have capacities in the several megawatt (MW) range or occupy significant areas of land. Consequently, it is highly recommended to conduct a legal evaluation of the current national regulations to determine the allowable size (in MWs or hectares) and the permitted structure of Agri-PV installations.
Following the national legal assessment, it is also crucial to check for any regional or local restrictions regarding the types or sizes of Agri-PV projects that can be developed and approved. In addition to the Agri-PV facility itself, the connection to the electrical grid must also be authorized, especially if the energy generated is not consumed on-site. Therefore, civil and electrical works may need to be carried out to connect the Agri-PV plant to the national grid.

2.1. Bolzano demonstrator authorization process

While Italian national law permitted Agri-PV installations, Symbiosyst partners faced more restrictive regulations from the Autonomous Province of Bolzano. In the past the province through the provincial law readily approved rooftop solar installations through a streamlined authorization process, but banned ground-mounted solar systems to protect agricultural land from energy development. However, the local regulations didn't differentiate between conventional ground-mounted arrays and innovative elevated Agri-PV systems that enable continued farming underneath.
To gain approval for their Agri-PV research demonstrator, Symbiosyst partners engaged in ongoing discussions with local policymakers to highlight how these systems could complement agricultural activities rather than compete with them. Following this consultation process, the province amended its laws to specifically permit Agri-PV demonstration projects.
The stakeholders prepared the executive design for the agri-PV demonstrator and submitted it to the local municipality to inform them of the planned start date for construction. Although a recent amendment to provincial law suggested that the approval process would be as straightforward as that for rooftop installations, the actual process turned out to be more complex for two main reasons.
Firstly, because the new law is recent, the municipality opted to involve the provincial authorities to ensure a thorough review of the stakeholders' request for approval. Secondly, even though the agri-PV demonstrators occupy a relatively small area, the sun-tracking structures are anchored into the ground and have a rotation axis that reaches approximately 4 meters in height. Therefore, comprehensive structural calculations must be submitted to the qualified authority, the Italian Genio Civile, to obtain a submission receipt. This receipt must be shared with the municipality before construction of the agri-PV plant can commence, indicating that all official processes have been completed. The authorization process was then formalized by having a 2 steps approval, from the Province and from the municipality to declare together the conformity of the project.

2.2. Barcelona demonstrator authorization process

For Barcelona demonstrator the national and regional rules did not present particular restrictions to the realization of the Agri-PV demonstrator. As the project is nearby the BCN airport, a permit was required and obtained by the AESA (the Spanish Aviation Safety and Security Agency: *Agencia Estatal de Seguridad Aérea*).
The procedure at local level to be followed by the stakeholders is very similar to the one applicable for the Italian demonstrator. It means that the first step is to submit a detailed project description to the municipality that has to be informed about the intention of the stakeholder to build the agri-PV demonstrator. Afterwards, if the stakeholders do not receive denials from the municipality, a detailed executive design for the Agri-PV system has to the submitted including the structural calculation in order to begin the plant construction.

3. Procedures for Agri-PV plant grid connection

Agri-PV installations are typically built in rural areas where the electrical grid may be weak or distant from the installation site. Therefore, conducting a grid connection feasibility study is essential before beginning any project. The intended use of the generated electricity then determines which specific grid connection procedure must be followed. For example, the demonstrator sites in Barcelona, Bolzano, and Schipluiden required different grid connection procedures based on their distinct plans for utilizing the produced energy.

3.1. Bolzano demonstrator grid connection procedure

Since this Agri-PV demonstrator is not connected to any existing buildings, it cannot directly feed electrical loads. However, due to its proximity to the national grid, the stakeholders submitted a request to the local electricity grid operator to receive technical specifications and cost estimated for the grid connection. The request included the power output of the system and the power needed to feed auxiliary services, for instance the safety mechanism of the tracker and the systems of sensors and communication devices.

The Distribution System Operator (DSO) responded favourably, indicating that connecting the Agri-PV plant to the low voltage grid would be straightforward and cost-effective. For the Italian grid connection rules the DSO counts the only days needed for the civil and electric works, while all the time needed to get the permission to realize the conduit through third-parts property is not considered in the offer of the DSO. Unfortunately, the path established unilaterally by the DSO passed under a small bridge of the railway in the countryside. Even though the works were simple from the technical point of view, more than one year was needed by the DSO itself to get the permission from the railway company to dig the conduit. In this scenario the consortium decided to accept the DSO offer and in the meantime we waited the DSO completed the conduit we connected the PV plant to the existent electric circuit of a close building. In so doing the PV system could not inject energy into the grid but Symbiosyst succeeded in feeding the trackers to enable their tilting, enabling the structure to reach the stow position under harsh weather conditions and to generate realistic crop shading patterns representative of those produced by a commercial agrivoltaic installation with a fully operational tracking system.

In June 2026, the demonstrator was connected to the DSO grid with full capability of both energy injection and consumption for the auxiliary services.

3.2. Barcelona and Schipluiden demonstrators grid connection procedures

For both these demonstrators there were already points of common coupling to the grid available to manage the energy provided by the PV equipment.

Barcelona demonstrator has already an existing electric grid connection to the Agròpolis site to serve offices, other agricultural loads, such as irrigation system, electric tools & perhaps future vehicles. In the initial phase, the PV system was connected to the grid but was not authorized to export excess electricity. Therefore, all power generated had to be consumed on-site. To comply with this requirement, the Agri-PV system was equipped with a smart meter controlling the inverters and limiting the PV production to the instantaneous demand of the local loads. Subsequently, the demonstrator operator applied to the Distribution System Operator (DSO) for permission to export surplus electricity to the grid. The request was approved, and on 16 October 2026 the grid connection was upgraded, enabling the export of excess solar energy not consumed on-site.

Schipluiden demonstrator consists in a rooftop PV system installed on the top of the roof of the greenhouse that is already connected to the national grid. Also, in this case the energy coming from the PV inverter is fully used by the loads connected to the main circuit of the greenhouse.

4. Flight permitting and measurements with drones

4.1. Permitting procedure for the drone flights

Regulatory framework and the entities involved

Drone operations at the SYMBIOSYST demonstrators are conducted under the EASA framework for unmanned aircraft, as implemented in each Member State. The operator holds its own registration, pilot competency and third-party liability insurance, which are company-level credentials rather than site-specific ones. What varies from site to site is airspace access. Where a demonstrator is located within controlled airspace or within the protection zone of an airport, a separate site-specific authorisation may be required from the national aviation authority and/or the air navigation service provider, in addition to the operator's own credentials. It is this second step, rather than the operator's qualifications, that may determine whether a flight can go ahead..

Ora/Bolzano demonstrator: permitting route that never produced a decision

ABOVE engaged a locally registered Italian drone operator to hold the airspace applications for the Bolzano area, since the site lies close to Bolzano Airport and falls within its protection zone. The applicable procedure is the Italian ATM-09 process, under which the request is filed with the airport and ENAC, notified to ENAV, and results in an ATS opinion and the publication of a NOTAM for the intended flight window.

Two applications were submitted in March and August 2023, but despite follow-up requests and formal reminders, no ATS opinion or final decision was ever issued. It was confirmed that the applied procedure was right, so lack of response appeared to be an administrative issue rather than a technical objection. Moreover from January 2024, additional Remote ID requirements would have required new equipment before any further application. Under these circumstances, ABOVE decided to involve partners and suppliers operating drones properly equipped with Remote ID devices and already holding the relevant company-level operating credentials.

Ora/Bolzano demonstrator: how the 2026 measurement campaign was delivered

The measurements were ultimately completed in July 2026 by restructuring who flew, rather than by resolving the original applications:

- Thermography was flown by EURAC using its own DJI Matrice 4T, its own pilot and its existing certification, with Above defining the acquisition requirements and carrying out the processing and analysis. No third-party flight permit was required on Above's side.
- Aerial electroluminescence was performed by an ABOVE partner, whose UAV pilots hold their own ascent permits for day and night operations on the basis of pilot examination and liability insurance. These are company-level permits and did not require a new site-specific application.
- Site-level permissions were handled separately by Laimburg, covering night access to the plant and the site electrician sign-off needed to energise the strings for the EL survey.

This is the practical lesson for other agri-PV projects. Where an airspace authorisation route stalls, using a partner or subcontractor that already holds the relevant operating permissions at company-level for that airspace is considerably faster than pursuing the original application.

Barcelona demonstrator: explicit refusal

At the Barcelona demonstrator the obstacle was different and unambiguous. The site lies close to Barcelona Airport, and the surrounding area is subject to a military restriction.

Above applied through a local collaborator for flight permission from ENAIRE for scheduled dates in July 2025, in support of the crop monitoring work. An initial approval was indicated, but when the updated request was submitted the authorities revoked it, on the basis that under Royal Decree 517/2024 the request had to be processed through a

different procedure. The request was then refused outright. Flight was not permitted at any altitude: the area is restricted to ground level, and the military does not authorise operations within it.

Operating at reduced altitude was explored as a mitigation and was also refused. The only remaining options identified were to wait for a full administrative process to complete under the new decree, which was incompatible with the crop cycle and the deliverable timetable, or to carry out the equivalent monitoring on a comparable crop at an unrestricted location.

Table 9: Comparison of the two sites

	Ora/Bolzano	**Barcelona**
Constraint	Proximity to Bolzano Airport, application process produced no decision	Proximity to Barcelona Airport plus a military restriction
Authorities involved	Bolzano Airport, ENAC, ENAV (ATM-09 procedure)	ENAIRE, under Royal Decree 517/2024
Outcome	No ATS opinion issued on either application (Mar 2023, Aug 2023)	Refused; no flight permitted at any altitude
How measurements were obtained	Flown by EURAC and by an Above partner under their own existing permissions, July 2026	Not obtained; alternative location for the crop trial proposed

4.2. Metrology and sensing solution

Aerial thermography — Ora/Bolzano demonstrator

Above and EURAC worked in synergy to define the thermal imagery acquisition requirements and then process and analyse the resulting data through SolarGain, to identify underperforming modules and hot-spot indicators across the demonstrator's apple-orchard-mounted trackers. Because EURAC had recently acquired its own thermal-capable drone, Acquisition parameters (flight altitude, image overlap, gimbal angle, thermal gain mode) were agreed on June 2026. EURAC completed the thermography flight in early July 2026; Above received the imagery afterwards for processing and analysis.

Electroluminescence — Ora/Bolzano demonstrator

Above performed the aerial electroluminescence. The survey was carried out over the nights of 8-10 July 2026, energising and imaging all 200 modules across the plant's 7 rows / 10 strings.

4.3. Datasheets — drone platforms and sensors

Table 10: DJI Matrice 4T features — thermography drone (EURAC-owned, flown for Above's requirements)

Parameter	**Value**
Drone max takeoff weight	1,420 g (standard propellers)
Max flight time	49 min (no wind, no payload)

Positioning	RTK: 1 cm + 1 ppm horizontal, 1.5 cm + 1 ppm vertical
Thermal imager	Uncooled vanadium oxide (VOx)
Thermal resolution	640 x 512 px native; up to 1,280 x 1,024 px (Super Resolution)
Thermal frame rate	30 Hz
Spectral range	8-14 µm
Thermal lens	45° DFOV, 53 mm equivalent focal length, f/1.0, focus 5 m to infinity
Temperature range	-20°C to 150°C (high gain) / 0°C to 550°C (low gain)
Temperature accuracy	±2°C or ±2% (high gain) / ±5°C or ±3% (low gain), whichever is greater
Visual cameras	Wide 48 MP/24 mm f/1.7; medium-tele 48 MP/70 mm f/2.8; tele 48 MP/168 mm f/2.8

Source: DJI Matrice 4 Series official specification page, https://enterprise.dji.com/matrice-4-series/specs

Table 11: **EL survey platform features - Intertek CEA (AePVI) AirLabONE RTK**

Parameter	Value
Platform	AirLabONE RTK (proprietary Intertek CEA / AePVI UAV platform)
Max take-off mass class	Up to 10 kg
Typical flight altitude	Up to 30 m above the modules
EL camera	aepvi_cam_NIR_85, 12 MP, near-infrared, UAV-mounted
Switching hardware	AepviSwitch 1.0 Master/Slave — remote DC multi-switch, up to 100 strings via up to 4 service power supplies
Pilot certification	Ascent permits for day and night flights, held on the basis of written pilot examination and liability insurance (company-level, not site-specific)

5. Logistic aspects

Stakeholders have to care about logistic details of the Agri-PV demonstrators for the following aspects:

- Sometimes Agri-PV plants are developed in lands quite far from important roads, so equipment including tracker structures or power conversion stations or other heavy and big systems must be delivered to the plant site through country roads. It is necessary to check how wide and robust are the roads to reach the Agri-PV plant and if there are obstacles for heavy trucks to reach the plant site (for example small/weak bridges). If there are already agriculture activities in the Agri-PV site, it's likely that trucks can reach the site to take away fruits or vegetable, but a check is always recommended.
- Depending on the size of the Agri-PV installation a proper storage area must be dedicated to store the equipment before installation. Civil, mechanical, electrical works have not to interfere with agricultural activities that may be already established in the project land, and the safety of farmers working in the area where the PV equipment has to be installed has to be guaranteed.
- Some mechanical and electrical works have to the performed at height of 3 – 4 meters from the ground level. So safe and strong elevation tools are used for Agri-PV installation based on elevated trackers, fixed structured or PV modules integrated into the roof of greenhouses. In case the installation of trackers has to be performed in the same piece of land where plants are already present (for example the apple trees in the Ora/Bolzano demonstrator), the stakeholder has to find the ramming machine for the poles and the elevation platform to mount the PV modules whose dimensions are compatible with the space between the orchard tree lines.

6. Annexes

This deliverable D 3.3 includes the datasheets collected for Barcelona, Bolzano, Schipluiden and Scalea demonstrators. The documents are provided in the Annexes accompanying this deliverable.

Manual installation and commissioning Agri-PV Trackers for Barcellona e Bolzano Field.

Valmont/Conver Italy, in order to ensure correct installation and commissioning of its trackers, provides the following documents/manuals:

- A manual for the installation and commissioning of the power supply and control system for the motors in each tracker.
- A manual for using the power supply and control system.
- A manual for assembling and commissioning the trackers with regard to their structural component.

In general, the above-mentioned documents are valid for a wide range of trackers and are finalised for the specific scenario of interest by means of two other tools:

- The Construction Drawing Set, which for the specific field under consideration provides detailed information on the structural part of the tracker: type and number of components, specific assembly tolerances, etc.
- Executive Design, which details the assembled tracker in all its parts.

As a result of the Symbiosyst Project, Valmont Convert Italia, has developed two tracker solutions to meet the needs of the Bolzano and Barcelona agro-photovoltaic fields, characterised by:

- A clear height below the PV panels > 2.1 metres,
- A Monitoring and Control System that is able to acquisition more parameters (e.g. humidity area, temperatures, etc.) than those of a standard PV system; all this through an up-grade of the Scada System already available in Convert and indicated as ‘100 Motors’.

Consequently, the following documents were produced by Convert Italia and are available as annex:

- The ‘100 Motors’ control system installation and commissioning manual.
- A user manual for the ‘100 Motors’ control system.
- A general assembly manual for the structural solutions developed.
- The Construction Drawing Set and the Executive Design, respectively for the two demonstration plants in Bolzano and Barcelona.

Finally, it is pointed out that these documents are to be considered ‘non-definitive’ as all the solutions developed are to be considered prototypical; they will be definitive once they have incorporated the indications from the assembly/field start- up experience.

7. Conclusion

The purpose of this deliverable is to collect datasheets about the equipment installed over the demonstrators and provide the readers with information about the procedures followed by the Symbiosyst partners to receive the authorization to build the agri-PV plant. Nevertheless, it has to be said that each agri-PV project is unique, the technologies move forward quickly and authorization to build and connect the PV plants apply locally, so this deliverable aims to be an high level guide and advisory paper for all the stakeholders interested in starting new agri-PV initiatives to have ready some hints to properly start this challenging projects.

Stakeholders are warmly invited to check for updates applicable to the authorization procedures to get the permission to build and to connect the agri-PV plant because sometimes changing laws may be positive, but also negative.

ANNEXES - DATASHEETS of the Barcelona demo

R'n'D-modules for SYMBIOSYST Anti Glare 400 W

Premium PV panel

The durable one.
For a green planet.

Type 1

CONSTRUCTION CLOSE TO AIRPORTS
Perfect for use close to airports or highways.

LOW-REFLECTION SURFACE
Special glass structure reduces glare.

IMPROVED SURFACE
Anti-reflective coating ensures optimum self-cleaning and higher yields.

LOW LUMINANCE
At an angle of irradiation of 10°, the max.luminance of 10,000 cd/m² is significantly below the limit value of the EASA Aerodrome Design Guideline (20,000 cd/m²). Proven by independent measurements.

PACKED FOR SAFE TRANSPORT
Packed upright, avoiding the emergence of microcracks and thus ensuring factory quality at the place of delivery.

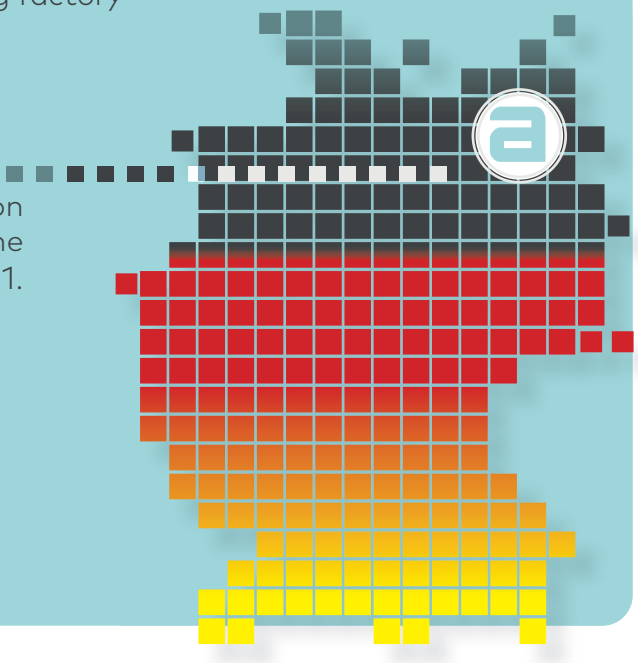

MADE IN GERMANY
Right here. In Prenzlau. In our production facility. Here we manufacture under the aspects of quality & durability since 2001.

A SUSTAINABLE CHOICE
A premium product, which lasts for decades. Manufactured according to rigid environmental standards. Produced with 100 % green electricity.

QUALITY UNDER HAND AND SEAL

Design optimized with SmartCalc Module

aleo
www.aleo-solar.de

R'n'D-modules for SYMBIOSYST Anti Glare 400 W Premium PV panel

DIMENSIONS [mm]

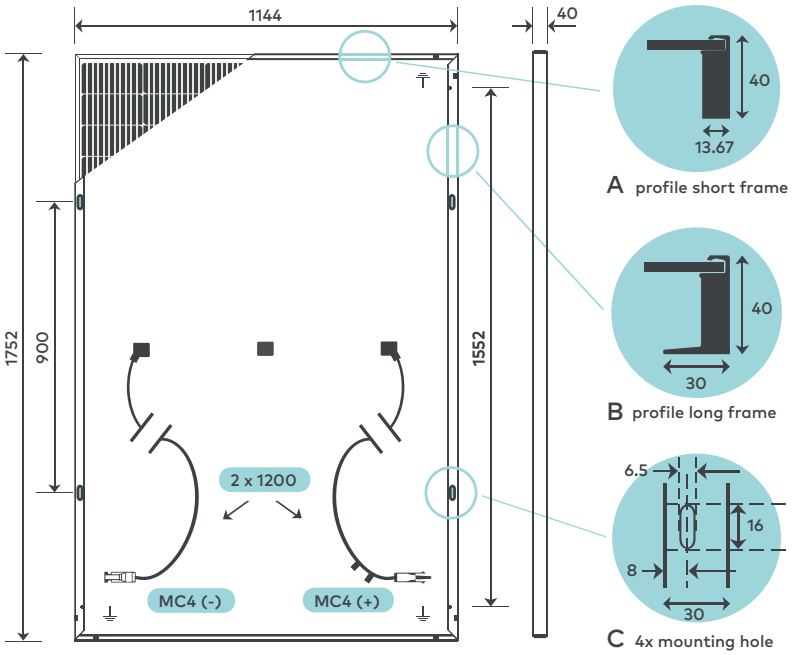

BASIC MODULE DATA

Length x width x height	[mm]	1752 x 1144 x 40
Weight	[kg]	22
Number of cells		108
Cell size	[mm]	182 x 91
Cell material		Monocrystalline Si, PERC
Number of Busbars		10
Front sheet		3.2 mm Solar glass (TSG) with anti-reflective coating, minimal reflection
Back sheet		Polymer sheet, transparent
Frame material		Al alloy, black

BASIC DATA JUNCTION BOX

Parts of junction box acc. to IEC 62790	[mm]	left & right: 62 x 58 x 14 middle: 49 x 55 x 14
Bypass diodes		3 (one per box)
IP class		IP68
Cable	[mm]	1200 (+), 1200 (-) acc. to EN 50618
Connectors		genuine MC4 acc. to EN 62852

ELECTRICAL DATA (STC)

			TYPE 1
Rated power	P_{MPP}	[W]	400
Rated voltage	V_{MPP}	[V]	31.5
Rated current	I_{MPP}	[A]	12.7
Open-circuit voltage	V_{OC}	[V]	37.6
Short-circuit current	I_{SC}	[A]	13.1
Efficiency	η	[%]	20.0

Electrical values measured under standard test conditions (STC): 1000 W/m²; 25 °C; AM 1.5

CLASSIFICATION

Classification range (positive classification)	[W]	0/+9.99

ELECTRICAL DATA (LOW IRRADIANCE)

			TYPE 1
Power	P_{MPP}	[W]	77.6

Electrical values measured under: 200 W/m²; 25 °C; AM 1.5
Measurement tolerance of P_{MPP} under STC -3/+3 %; Accuracy of other electrical values -10/+10 %
Efficiency related to gross module area

TEMPERATURE COEFFICIENTS

Temperature coefficient I_{SC}	α (I_{SC})	[%/K]	+0.03
Temperature coefficient V_{OC}	β (V_{OC})	[%/K]	-0.26
Temperature coefficient P_{MPP}	Y (P_{MPP})	[%/K]	-0.34

REFLECTION PROPERTIES

Angle	[deg.]	10	20	30	40	50	60	70	80
Luminance	[cd/m²]	1.0E+04	1.1E+04	1.1E+04	1.7E+04	3.0E+04	8.9E+04	3.4E+05	3.5E+06
Partial reflection factor	[%]	0.001	0.001	0.001	0.001	0.002	0.006	0.021	0.219

Reflection properties measured independently by an external surveyor

PLEASE CONTACT YOUR AUTHORISED ALEO DEALER

ALEO SOLAR GMBH
Marius-Eriksen-Straße 1
17291 PRENZLAU
GERMANY

CONTACT
+49 3984-8328-0
info@aleo-solar.com
www.aleo-solar.com

©aleo solar GmbH 10/2024

R'n'D-modules for SYMBIOSYST Anti Glare 270 W

Premium PV panel

The durable one.
For a green planet.

Type 2

CONSTRUCTION CLOSE TO AIRPORTS
Perfect for use close to airports or highways.

LOW-REFLECTION SURFACE
Special glass structure reduces glare.

IMPROVED SURFACE
Anti-reflective coating ensures optimum self-cleaning and higher yields.

LOW LUMINANCE
At an angle of irradiation of 10°, the max.luminance of 10,000 cd/m² is significantly below the limit value of the EASA Aerodrome Design Guideline (20,000 cd/m²). Proven by independent measurements.

PACKED FOR SAFE TRANSPORT
Packed upright, avoiding the emergence of microcracks and thus ensuring factory quality at the place of delivery.

MADE IN GERMANY
Right here. In Prenzlau. In our production facility. Here we manufacture under the aspects of quality & durability since 2001.

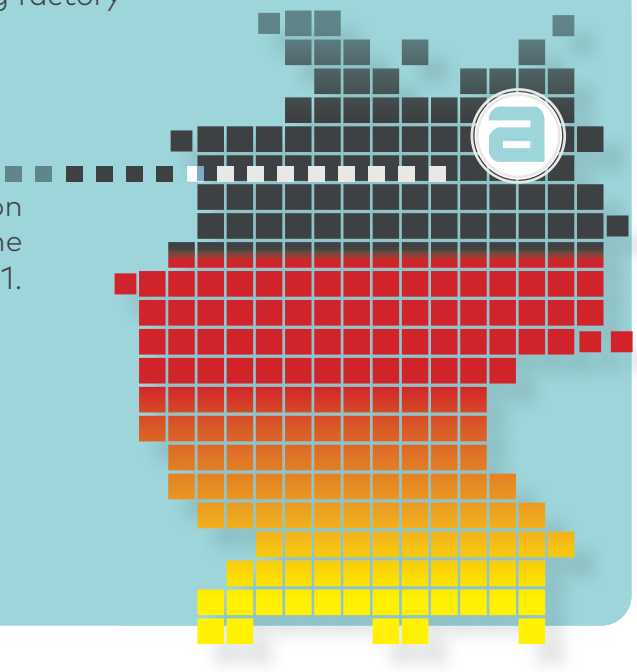

A SUSTAINABLE CHOICE
A premium product, which lasts for decades. Manufactured according to rigid environmental standards. Produced with 100 % green electricity.

QUALITY UNDER HAND AND SEAL

Design optimized with SmartCalc Module

aleo
www.aleo-solar.de

R'n'D-modules for SYMBIOSYST Anti Glare 270 W Premium PV panel

DIMENSIONS [mm]

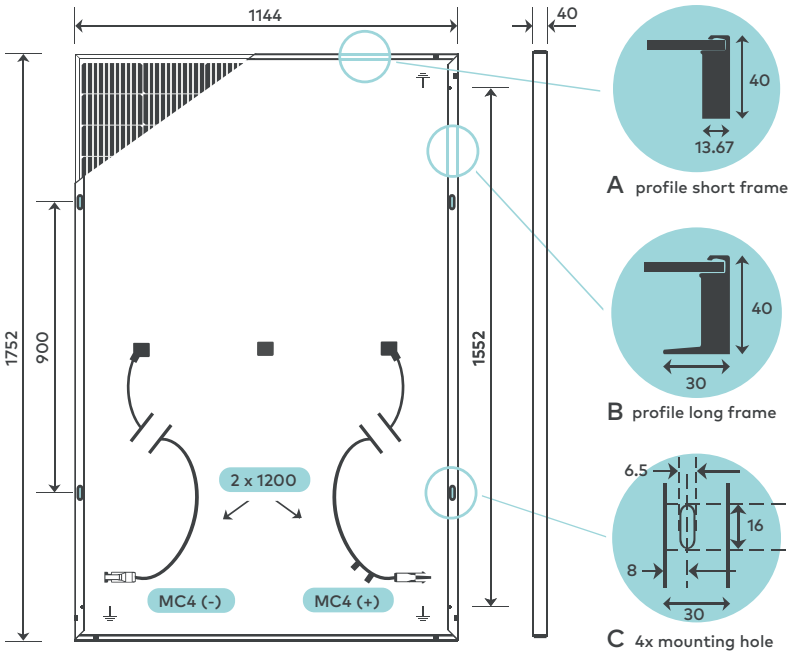

BASIC MODULE DATA

Length x width x height	[mm]	1752 x 1144 x 40
Weight	[kg]	22
Number of cells		72
Cell size	[mm]	182 x 91
Cell material		Monocrystalline Si, PERC
Number of Busbars		10
Front sheet		3.2 mm Solar glass (TSG) with anti-reflective coating, minimal reflection
Back sheet		Polymer sheet, transparent
Frame material		Al alloy, black

BASIC DATA JUNCTION BOX

Parts of junction box acc. to IEC 62790	[mm]	left & right: 62 x 58 x 14
Bypass diodes		2 (one per box)
IP class		IP68
Cable	[mm]	1200 (+), 1200 (-) acc. to EN 50618
Connectors		genuine MC4 acc. to EN 62852

ELECTRICAL DATA (STC)

			TYPE 2
Rated power	P_{MPP}	[W]	270
Rated voltage	V_{MPP}	[V]	21.1
Rated current	I_{MPP}	[A]	12.8
Open-circuit voltage	V_{OC}	[V]	25.2
Short-circuit current	I_{SC}	[A]	13.2
Efficiency	η	[%]	13.5

Electrical values measured under standard test conditions (STC): 1000 W/m²; 25 °C; AM 1.5

CLASSIFICATION

Classification range (positive classification)	[W]	0/+9.99

ELECTRICAL DATA (LOW IRRADIANCE)

			TYPE 2
Power	P_{MPP}	[W]	52.4

Electrical values measured under: 200 W/m²; 25 °C; AM 1.5
Measurement tolerance of P_{MPP} under STC -3/+3 %; Accuracy of other electrical values -10/+10 %
Efficiency related to gross module area

TEMPERATURE COEFFICIENTS

Temperature coefficient I_{SC}	α (I_{SC})	[%/K]	+0.03
Temperature coefficient V_{OC}	β (V_{OC})	[%/K]	-0.26
Temperature coefficient P_{MPP}	Y (P_{MPP})	[%/K]	-0.34

REFLECTION PROPERTIES

Angle	[deg.]	10	20	30	40	50	60	70	80
Luminance	[cd/m²]	1.0E+04	1.1E+04	1.1E+04	1.7E+04	3.0E+04	8.9E+04	3.4E+05	3.5E+06
Partial reflection factor	[%]	0.001	0.001	0.001	0.001	0.002	0.006	0.021	0.219

Reflection properties measured independently by an external surveyor

PLEASE CONTACT YOUR AUTHORISED ALEO DEALER

ALEO SOLAR GMBH
Marius-Eriksen-Straße 1
17291 PRENZLAU
GERMANY

CONTACT
+49 3984-8328-0
info@aleo-solar.com
www.aleo-solar.com

©aleo solar GmbH 10/2024

apogee®

INSTRUMENTS

OWNER'S MANUAL

EPAR SENSOR

Model SQ-618

Rev: 17-Oct-2023



APOGEE INSTRUMENTS, INC. | 721 WEST 1800 NORTH, LOGAN, UTAH 84321, USA
TEL: (435) 792-4700 | FAX: (435) 787-8268 | WEB: APOGEEINSTRUMENTS.COM

Copyright © 2023 Apogee Instruments, Inc.

TABLE OF CONTENTS

Owner's Manual 1

Certificates of Compliance 3

Introduction 5

Sensor Models 7

Specifications 8

Deployment and Installation 11

Cable Connectors 12

Operation and Measurement 12

Maintenance and Recalibration 19

Troubleshooting and Customer Support 20

Return and Warranty Policy 21

CERTIFICATE OF COMPLIANCE

EU Declaration of Conformity

This declaration of conformity is issued under the sole responsibility of the manufacturer:

Apogee Instruments, Inc.
721 W 1800 N
Logan, Utah 84321
USA

for the following product(s):

Models: SQ-618
Type: ePAR Sensor

The object of the declaration described above is in conformity with the relevant Union harmonization legislation:

2014/30/EU	Electromagnetic Compatibility (EMC) Directive
2011/65/EU	Restriction of Hazardous Substances (RoHS 2) Directive
2015/863/EU	Amending Annex II to Directive 2011/65/EU (RoHS 3)

Standards referenced during compliance assessment:

EN 61326-1:2013	Electrical equipment for measurement, control, and laboratory use – EMC requirements
EN 63000:2018	Technical documentation for the assessment of electrical and electronic products with respect to the restriction of hazardous substances

Please be advised that based on the information available to us from our raw material suppliers, the products manufactured by us do not contain, as intentional additives, any of the restricted materials including lead (see note below), mercury, cadmium, hexavalent chromium, polybrominated biphenyls (PBB), polybrominated diphenyls (PBDE), bis (2-ethylhexyl) phthalate (DEHP), butyl benzyl phthalate (BBP), dibutyl phthalate (DBP), and diisobutyl phthalate (DIBP). However, please note that articles containing greater than 0.1 % lead concentration are RoHS 3 compliant using exemption 6c.

Further note that Apogee Instruments does not specifically run any analysis on our raw materials or end products for the presence of these substances, but we rely on the information provided to us by our material suppliers.

Signed for and on behalf of:
Apogee Instruments, October 2023



Bruce Bugbee
President
Apogee Instruments, Inc.

CE

CERTIFICATE OF COMPLIANCE

UK Declaration of Conformity

This declaration of conformity is issued under the sole responsibility of the manufacturer:

Apogee Instruments, Inc.
721 W 1800 N
Logan, Utah 84321
USA

for the following product(s):

Models: SQ-618
Type: ePAR Sensor

The object of the declaration described above is in conformity with the relevant UK Statutory Instruments and their amendments:

2016 No. 1091	The Electromagnetic Compatibility Regulations 2016
2012 No. 3032	The Restriction of the Use of Certain Hazardous Substances in Electrical and Electronic Equipment Regulations 2012

Standards referenced during compliance assessment:

BS EN 61326-1:2013	Electrical equipment for measurement, control, and laboratory use – EMC requirements
BS EN 63000:2018	Technical documentation for the assessment of electrical and electronic products with respect to the restriction of hazardous substances

Please be advised that based on the information available to us from our raw material suppliers, the products manufactured by us do not contain, as intentional additives, any of the restricted materials including lead (see note below), mercury, cadmium, hexavalent chromium, polybrominated biphenyls (PBB), polybrominated diphenyls (PBDE), bis (2-ethylhexyl) phthalate (DEHP), butyl benzyl phthalate (BBP), dibutyl phthalate (DBP), and diisobutyl phthalate (DIBP). However, please note that articles containing greater than 0.1 % lead concentration are RoHS 3 compliant using exemption 6c.

Further note that Apogee Instruments does not specifically run any analysis on our raw materials or end products for the presence of these substances, but we rely on the information provided to us by our material suppliers.

Signed for and on behalf of:
Apogee Instruments, October 2023



Bruce Bugbee
President
Apogee Instruments, Inc.

UK CA

INTRODUCTION

Radiation that drives photosynthesis is called photosynthetically active radiation (PAR) and, historically, is defined as total radiation across a range of 400 to 700 nm. PAR is almost universally quantified as photosynthetic photon flux density (PPFD) in units of micromoles per square meter per second (µmol m^{-2} s^{-1}, equal to microEinsteins per square meter per second) summed from 400 to 700 nm (total number of photons from 400 to 700 nm). However, ultraviolet and far-red photons outside the defined PAR range of 400-700 nm can also contribute to photosynthesis and influence plant responses (e.g., flowering).

Data from recent studies indicate that far-red photons synergistically interact with photons in the historically defined PAR range of 400-700 nm to increase photochemical efficiency in leaves (Hogewoning et al., 2012; Murakami et al., 2018; Zhen and van Iersel, 2017; Zhen et al., 2019). Measurements from whole plants and plant canopies indicate adding far-red photons (using far-red LEDs with peaks near 735 nm and outputting photons across a range of about 700-750 nm) to radiation sources outputting photons in the 400-700 nm range increases canopy photosynthesis equal to the addition of the same number of photons in the 400-700 nm range for multiple species, and C3 and C4 photosynthetic pathways, but far-red photons alone are photosynthetically inefficient and result in minimal photosynthesis (Zhen and Bugbee, 2020a; Zhen and Bugbee, 2020b).

This research suggests that far-red photons drive canopy photosynthesis with similar efficiency as photons in the traditional PAR range when they are acting synergistically with photons in the 400-700 nm range, meaning when far-red photons are added to radiation sources outputting 400-700 nm photons. Thus, far-red photons need to be included in the definition of PAR (Zhen et al., 2021).

Sensors that measure PPFD are often called quantum sensors due to the quantized nature of radiation. A quantum refers to the minimum quantity of radiation, one photon, involved in physical interactions (e.g., absorption by photosynthetic pigments). In other words, one photon is a single quantum of radiation. Sensors that function like traditional quantum sensors but measure a wider range of wavelengths can be thought of as an ‘extended range’ quantum sensor.

Typical applications of traditional quantum sensors include incoming PPFD measurement over plant canopies in outdoor environments or in greenhouses and growth chambers and reflected or under-canopy (transmitted) PPFD measurement in the same environments. The extended photosynthetically active radiation (ePAR) sensor detailed in this manual uses a detector that is sensitive to radiation from 383-757 nm ± 5 nm, which allows it to measure photons from Far-red.

Apogee Instruments SQ-600 series ePAR sensors consist of a cast acrylic diffuser (filter), photodiode, and signal processing circuitry mounted in an anodized aluminum housing. A cable to connect the sensor to a measurement device is also included. SQ-600 series ePAR sensors are designed for continuous photon flux density measurements in indoor or outdoor environments. The SQ-618 sensors output a digital signal using Modbus RTU protocol over RS-232 or RS-485.

Hogewoning et al. 2012. Photosynthetic Quantum Yield Dynamics: From Photosystems to Leaves. *The Plant Cell*, 24: 1921–1935.

Murakami et al. 2018. A Mathematical Model of Photosynthetic Electron Transport in Response to the Light Spectrum Based on Excitation Energy Distributed to Photosystems. *Plant Cell Physiology*. 59(8): 1643–1651.

Zhen and Van Iersel. 2017. Far-red light is needed for efficient photochemistry and photosynthesis. *Journal of Plant Physiology.* 209: 115–122.

Zhen et al. 2019. Far-red light enhances photochemical efficiency in a wavelength-dependent manner. *Physiologia Plantarum.* 167(1):21-33.

Zhen and Bugbee. 2020a. Far-red photons have equivalent efficiency to traditional photosynthetic photons: Implications for redefining photosynthetically active radiation. *Plant Cell and Environment*. 2020; 1–14.

Zhen and Bugbee. 2020b. Substituting Far-Red for Traditionally Defined Photosynthetic Photons Results in Equal Canopy Quantum Yield for CO_2 Fixation and Increased Photon Capture During Long-Term Studies: Implications for Re-Defining PAR. *Frontiers in Plant Science.* 11:1-14.

Zhen et al. 2021. Why Far-Red Photons Should Be Included in the Definition of Photosynthetic Photons and the Measurement of Horticultural Fixture Efficacy. *Frontiers in Plant Science.* 12:1-4.

SENSOR MODELS

This manual covers the Modbus RTU communication protocol, ePAR sensor model SQ-618 (in bold below). Additional models are covered in their respective manuals.

Model	Signal
SQ-610	Self-powered
SQ-612	0-2.5 V
SQ-614	4-20 mA
SQ-615	0-5 V
SQ-616	USB
SQ-617	SDI-12
SQ-618	**Modbus**



A sensor's model number and serial number are located on the bottom of the sensor. If the manufacturing date of a specific sensor is required, please contact Apogee Instruments with the serial number of the sensor.

SPECIFICATIONS

	SQ-618-SS
Input Voltage	5.5 to 24 V DC
Average Max Current Draw	RS-232 37 mA; RS-485 quiescent 37 mA, active 42 mA
Calibration Factor	Custom for each sensor and stored in the firmware
Calibration Uncertainty	± 5 % (see calibration Traceability below)
Measurement Repeatability	Less than 1 % (up to 4000 µmol m^{-2} s^{-1})
Long-term Drift (Non-stability)	Less than 2 % per year
Non-linearity	Less than 1 % (up to 4000 µmol m^{-2} s^{-1})
Field of View	180°
Spectral Range	383 to 757 nm ± 5 nm (wavelengths where response is greater than 50 %)
Directional (Cosine) Response	± 2 % at 45° zenith angle, ± 5 % at 75° zenith angle (see Directional Response below)
Azimuth Error	Less than 0.5 %
Tilt Error	Less than 0.5 %
Temperature Response	-0.11 ± 0.04 % per C (see Temperature Response below)
Uncertainty in Daily Total	Less than 5 %
Detector	Blue-enhanced silicon photodiode
Housing	Anodized aluminum body with acrylic diffuser
IP Rating	IP68
Operating Environment	-40 to 70 C; 0 to 100 % relative humidity; can be submerged in water up to depths of 30 m
Dimensions	30.5 mm diameter, 37 mm height
Mass (with 5 m of cable)	140 g
Cable	5 m of shielded, twisted-pair wire; TPR jacket (high water resistance, high UV stability, flexibility in cold conditions); pigtail lead wires; stainless steel (316), M8 connector

Calibration Traceability

Apogee Instruments SQ-600 series ePAR sensors are calibrated through side-by-side comparison to the mean of four transfer standard sensors under a reference lamp. The transfer standard sensors are recalibrated with a quartz halogen lamp traceable to the National Institute of Standards and Technology (NIST).

Spectral Response

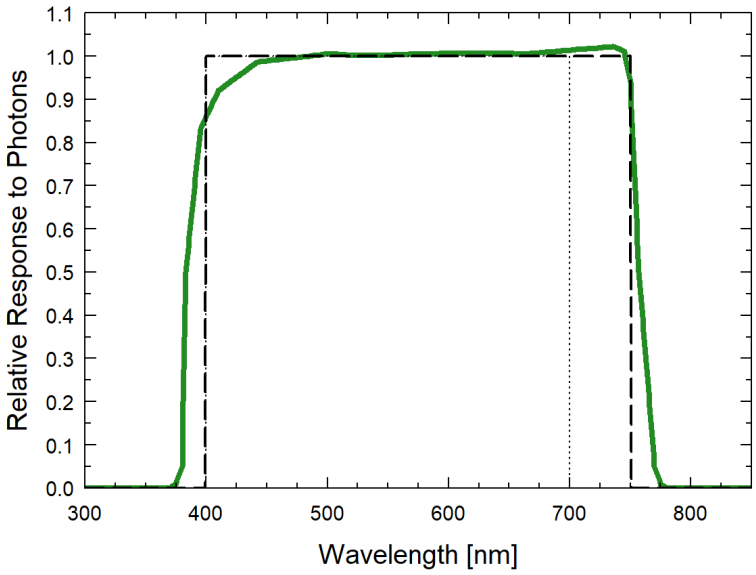

Mean spectral response measurements of four replicate Apogee SQ-600 series ePAR Sensors. Incremental spectral response measurements were made at 10 nm increments across a wavelength range of 370 to 800 nm in a monochromator with an attached electric light source. Measured spectral data from each quantum sensor were refined and normalized by comparing measured spectral response of the monochromator/electric light combination to measured spectral differences from a quantum sensor reference.

Cosine Response

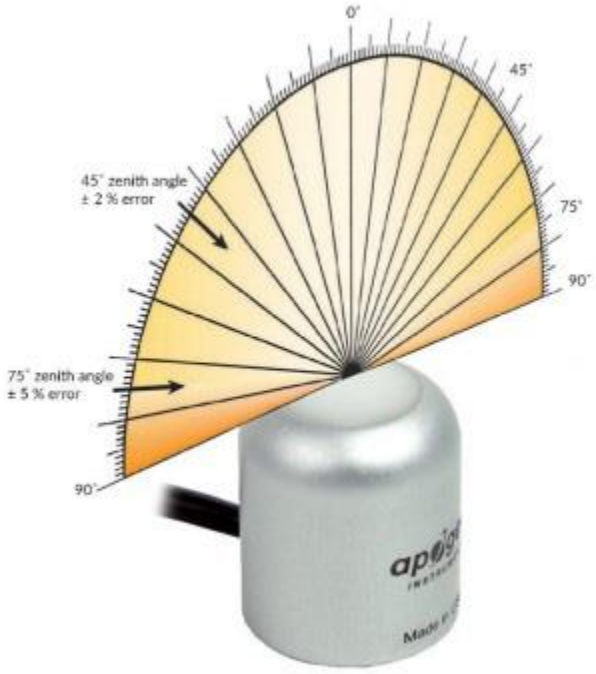

Directional, or cosine, response is defined as the measurement error at a specific angle of radiation incidence. Error for Apogee SQ-600 series ePAR Sensor is approximately ± 2 % and ± 5 % at solar zenith angles of 45° and 75°, respectively.

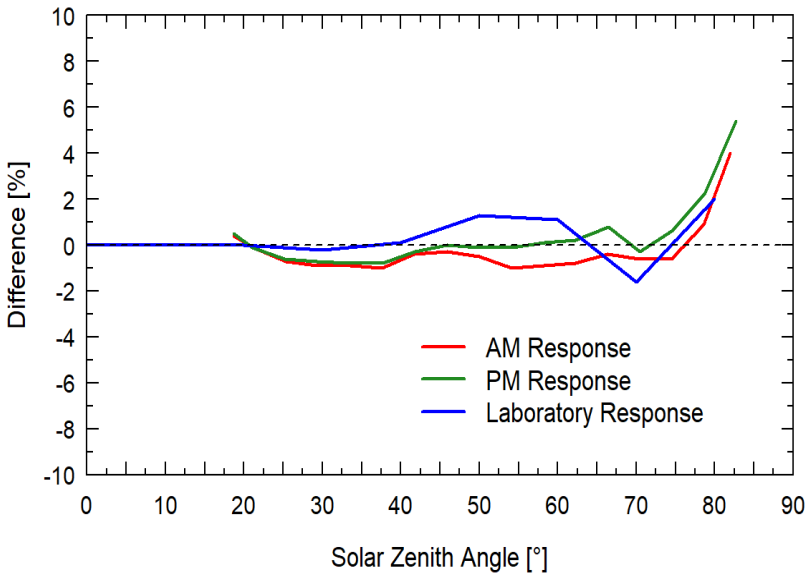

Mean directional (cosine) response of seven Apogee series quantum sensors. Directional response measurements were made on the rooftop of the Apogee building in Logan, Utah. Directional response was calculated as the relative difference of quantum sensors from the mean of replicate reference quantum sensors (LI-COR models LI-190 and LI-190R, Kipp & Zonen model PQS 1). Data were also collected in the laboratory using a reference lamp and positioning the sensor at varying angles.

DEPLOYMENT AND INSTALLATION

Mount the sensor to a solid surface with the nylon mounting screw provided. To accurately measure photon flux density incident on a horizontal surface, the sensor must be level. An Apogee Instruments model AL-100 leveling plate is recommended for this purpose. To facilitate mounting on a cross arm, an Apogee Instruments model AL-120 mounting bracket is recommended.



Nylon Screw: 10-32 x 3/8

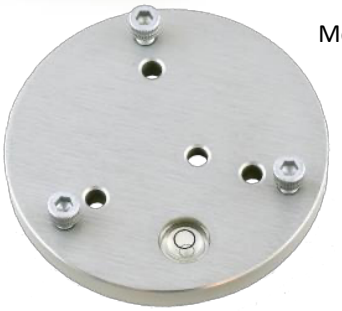

Model: AL-100



Nylon Screw: 10-32 x 3/8

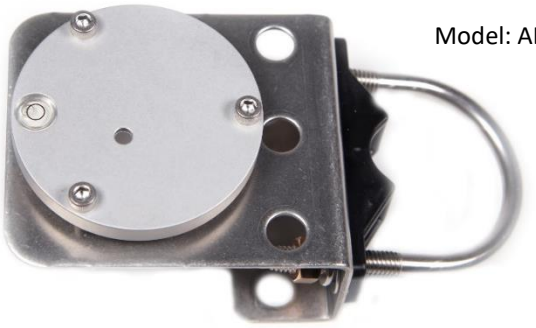

Model: AL-120

To minimize azimuth error, the sensor should be mounted with the cable pointing toward true north in the northern hemisphere or true south in the southern hemisphere. Azimuth error is typically less than 0.5 %, but it is easy to minimize by proper cable orientation.



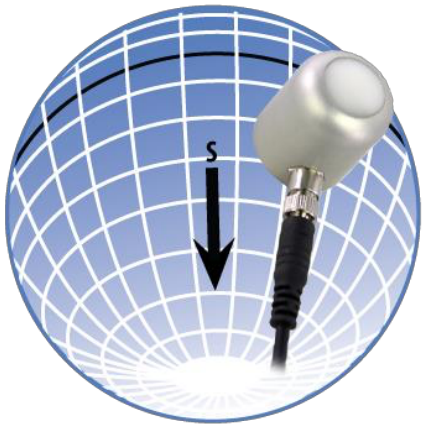

In addition to orienting the cable to point toward the nearest pole, the sensor should also be mounted such that obstructions (e.g., weather station tripod/tower or other instrumentation) do not shade the sensor. **Once mounted, the blue cap should be removed from the sensor.** The blue cap can be used as a protective covering for the sensor when it is not in use.

CABLE CONNECTORS

Apogee offers cable connectors to simplify the process of removing sensors from weather stations for calibration (the entire cable does **not** have to be removed from the station and shipped with the sensor).

The ruggedized M8 connectors are rated IP68, made of corrosion-resistant marine-grade stainless-steel, and designed for extended use in harsh environmental conditions.



Cable connectors are attached directly to the head.

Instructions

Pins and Wiring Colors: All Apogee connectors have six pins, but not all pins are used for every sensor. There may also be unused wire colors inside the cable. To simplify datalogger connection, we remove the unused pigtail lead colors at the datalogger end of the cable.

If a replacement cable is required, please contact Apogee directly to ensure ordering the proper pigtail configuration.

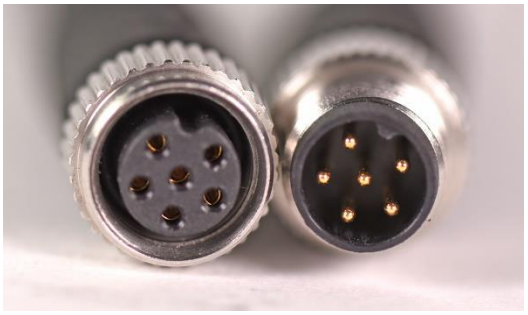

A reference notch inside the connector ensures proper alignment before tightening.

Alignment: When reconnecting a sensor, arrows on the connector jacket and an aligning notch ensure proper orientation.

Disconnection for extended periods: When disconnecting the sensor for an extended period of time from a station, protect the remaining half of the connector still on the station from water and dirt with electrical tape or other method.



When sending sensors in for calibration, only send the sensor head.

Tightening: Connectors are designed to be firmly finger-tightened only. There is an o-ring inside the connector that can be overly compressed if a wrench is used. Pay attention to thread alignment to avoid cross-threading. When fully tightened, 1-2 threads may still be visible.

WARNING: Do **not** tighten the connector by twisting the black cable or sensor head, only twist the metal connector (yellow arrows).

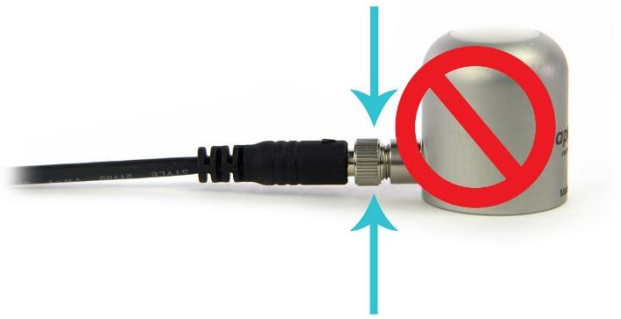

Finger-tighten firmly

OPERATION AND MEASUREMENT

The SQ-618 ePAR sensor has a Modbus output, where extended photosynthetically active radiation (ePAR) is returned in digital format. Measurement of SQ-618 ePAR sensors requires a measurement device with a Modbus interface that supports the Read Holding Registers (0x03) function.

Wiring

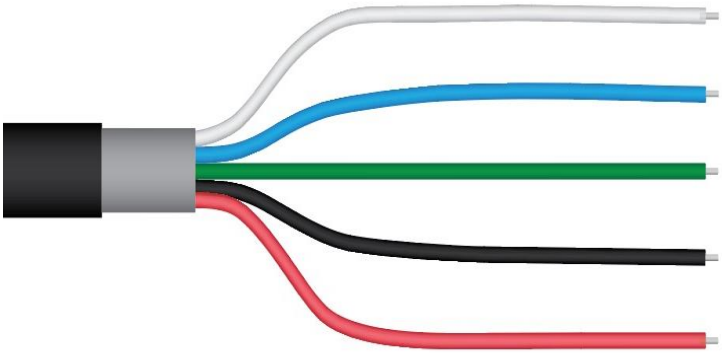

White: RS-232 RX / RS-485 Positive

Blue: RS-232 TX / RS-485 Negative

Green: Select (Switch between RS-232 and RS-485)

Black: Ground

Red: Power +12 V

The Green wire should be connected to Ground to enable RS-485 communication, or it should be connected to 12 V power for RS-232 communication. Text for the White and Blue wires above refers to the port that the wires should be connected to.

Sensor Calibration

All Apogee Modbus ePAR sensors (model SQ-618) have sensor-specific calibration coefficients determined during the custom calibration process. Coefficients are programmed into the sensors at the factory.

Modbus Interface

The following is a brief explanation of the Modbus protocol instructions used in Apogee SQ-618 ePAR sensors. For questions on the implementation of this protocol, please refer to the official serial line implementation of the Modbus protocol: http://www.modbus.org/docs/Modbus_over_serial_line_V1_02.pdf (2006) and the general Modbus protocol specification: http://www.modbus.org/docs/Modbus_Application_Protocol_V1_1b3.pdf (2012). Further information can be found at: http://www.modbus.org/specs.php

Overview

The primary idea of the Modbus interface is that each sensor exists at an address and appears as a table of values. These values are called Registers. Each value in the table has an associated index, and that index is used to identify which value in the table is being accessed.

Sensor addresses

Each sensor is given an address from 1 to 247. Apogee sensors are shipped with a default address of 1. If using multiple sensors on the same Modbus line, the sensor's address will have to be changed by writing the Slave Address register.

Register Index

Each register in a sensor represents a value in the sensor, such as a measurement or a configuration parameter. Some registers can only be read, some registers can only be written, and some can be both read and written. Each register exists at a specified index in the table for the sensor. Often this index is called an address, which is a separate address than the sensor address, but can be easily confused with the sensor address.

However, there are two different indexing schemes used for Modbus sensors, though translating between them is simple. One indexing scheme is called one-based numbering, where the first register is given the index of 1, and is thereby accessed by requesting access to register 1. The other indexing scheme is called zero-based numbering, where the first register is given the index 0, and is thereby accessed by requesting access to register 0. Apogee Sensors use zero-based numbering. However, if using the sensor in a system that uses one-based numbering, such as using a CR1000X logger, adding 1 to the zero-based address will produce the one-based address for the register.

Register Format:

According to the Modbus protocol specification, Holding Registers (the type registers Apogee sensors contain) are defined to be 16 bits wide. However, when making scientific measurements, it is desirable to obtain a more precise value than 16 bits allows. Thus, several Modbus implementations will use two 16-bit registers to act as one 32-bit register. Apogee Modbus sensors use this 32-bit implementation to provide measurement values as 32-bit IEEE 754 floating point numbers.

Apogee Modbus sensors also contain a redundant, duplicate set of registers that use 16-bit signed integers to represent values as decimal-shifted numbers. It is recommended to use the 32-bit values, if possible, as they contain more precise values.

Communication Parameters:

Apogee Sensors communicate using the Modbus RTU variant of the Modbus protocol. The default communication parameters are as follows:

Slave address: 1
Baudrate: 19200
Data bits: 8
Stop bits: 1
Parity: Even
Byte Order: Big-Endian (most significant byte sent first)

The baudrate and slave address are user configurable. **Valid slave addresses are 1 to 247. Since the address 0 is reserve as the broadcast address, setting the slave address to 0 will set the slave address to 1.** (This will also reset factory-calibrated values and should **NOT** be done by the user unless otherwise instructed.)

Read only registers (function code 0x3).

Float Registers	
0 1	calibrated output µmol m^{-2} s^{-1}
2 3	detector millivolts
4 5	immersed output µmol m^{-2} s^{-1}
6 7	solar output µmol m^{-2} s^{-1}
8 9	Reserved for Future Use
10 11	device status (1 means device is busy, 0 otherwise)
12 13	firmware version
Integer Registers	
40	calibrated output µmol m^{-2} s^{-1} (shifted one decimal point to the left)
41	detector millivolts (shifted one decimal point to the left)
42	immersed output µmol m^{-2} s^{-1} (shifted one decimal point to the left)
43	solar output µmol m^{-2} s^{-1} (shifted one decimal point to the left)
44	Reserved for Future Use
45	device status (1 means device is busy, 0 otherwise)
46	firmware version (shifted one decimal point to the left)

Read/Write registers (function codes 0x3 and 0x10).

Float Registers	
16 17	slave address
18 19	model number*
20 21	serial number*
22 23	baudrate (0 = 115200, 1 = 57600, 2 = 38400, 3 = 19200, 4 = 9600, writes of any number other than 0, 1, 2, 3, or 4 are ignored
24 25	parity (0 = none, 1 = odd, 2 = even)
26 27	number of stopbits
28 29	multiplier*
30 31	offset*
32 33	immersion factor*
34 35	solar multiplier*
36 37	running average
38 39	heater status
Integer Registers	
48	slave address
49	model number*
50	serial number*
51	baudrate (0 = 115200, 1 = 57600, 2 = 38400, 3 = 19200, 4 = 9600, writes of any number other than 0, 1, 2, 3, or 4 are ignored
52	parity (0 = none, 1 = odd, 2 = even)
53	number of stopbits
54	multiplier (shifted two decimal points to the left)*
55	offset (shifted two decimal points to the left)*
56	immersion factor (shifted two decimal points to the left)*
57	solar multiplier (shifted two decimal points to the left)*
58	running average
59	heater status

***Registers marked with an asterisk (*) cannot be written to unless a specific procedure is followed. Contact Apogee Instruments to receive the procedure for writing these registers**

Packet Framing:

Apogee sensors use Modbus RTU packets and tend to adhere to the following pattern:

Slave Address (1 byte), Function Code (1 byte), Starting Address (2 bytes), Number of Registers (2 bytes), Data Length (1 byte, optional) Data (n bytes, optional)

Modbus RTU packets use the zero-based address when addressing registers.

For information on Modbus RTU framing, see the official documentation at
http://www.modbus.org/docs/Modbus_Application_Protocol_V1_1b3.pdf

Example Packets:

An example of a data packet sent from the controller to the sensor using function code 0x3 reading register address 0. Each pair of square brackets indicates one byte.

[Slave Address][Function][Starting Address High Byte][Starting Address Low Byte][No of Registers High Byte][No of Registers Low Byte][CRC High Byte][CRC Low Byte]

0x01 0x03 0x00 0x00 0x00 0x02 0xC4 0x0B

An example of a data packet sent from the controller to the sensor using function code 0x10 writing a 1 to register 26. Each pair of square brackets indicates one byte.

[Slave Address][Function][Starting Address High Byte][Starting Address Low Byte][No of Registers High Byte][No of Registers Low Byte][Byte Count][Data High Byte][Data Low Byte][Data High Byte][Data Low Byte][CRC High Byte][CRC Low Byte]

0x01 0x10 0x00 0x1A 0x00 0x02 0x04 0x3f 0x80 0x00 0x00 0x7f 0x20.

Spectral Error

Quantum sensors are the most common instrument for measuring PPFD, because they are about an order of magnitude lower cost the spectroradiometers, but spectral errors must be considered. The spectral errors in the table below can be used as correction factors for individual radiation sources.

Spectral Errors for PPFD Measurements with Apogee SQ-610 Series ePAR Sensors

Radiation Source (Error Calculated Relative to Sun, Clear Sky)	SQ-610 Series PPFD Error [%]
Sun (Clear Sky)	2.5
Sun (Cloudy Sky)	2.6
Cool White Fluorescent (T5)	-0.5
Metal Halide	0.7
Ceramic Metal Halide	0.3
Mogul Base HPS	0.3
Dual-ended HPS	0.6
Cool White LED	-1.0
Warm White LED	-0.4
Blue LED (442 nm)	-2.7
Cyan LED (501 nm)	-0.7
Green LED (529 nm)	-0.7
Amber LED (598 nm)	-0.4
Red LED (666 nm)	-0.3
Far Red LED (737 nm)	4.5

Immersion Effect Correction Factor

When a radiation sensor is submerged in water, more of the incident radiation is backscattered out of the diffuser than when the sensor is in air (Smith, 1969; Tyler and Smith, 1970). This phenomenon is caused by the difference in the refractive index for air (1.00) and water (1.33) and is called the immersion effect. Without correction for the immersion effect, radiation sensors calibrated in air can only provide relative values underwater (Smith, 1969; Tyler and Smith, 1970). Immersion effect correction factors can be derived by making measurements in air and at multiple water depths at a constant distance from a lamp in a controlled laboratory setting.

Apogee SQ-610 series ePAR sensors have an immersion effect correction factor of 1.25. This correction factor should be multiplied by PPFD measurements made underwater to yield accurate PPFD.

Further information on underwater measurements and the immersion effect can be found on the Apogee webpage (http://www.apogeeinstruments.com/underwater-par-measurements/).

Smith, R.C., 1969. An underwater spectral irradiance collector. Journal of Marine Research 27:341-351.

Tyler, J.E., and R.C. Smith, 1970. Measurements of Spectral Irradiance Underwater. Gordon and Breach, New York, New York. 103 pages.

MAINTENANCE AND RECALIBRATION

Blocking of the optical path between the target and detector can cause low readings. Occasionally, accumulated materials on the diffuser of the upward-looking sensor can block the optical path in three common ways:

1. Moisture or debris on the diffuser.
2. Dust during periods of low rainfall.
3. Salt deposit accumulation from evaporation of sea spray or sprinkler irrigation water.

Apogee Instruments upward-looking sensors have a domed diffuser and housing for improved self-cleaning from rainfall, but active cleaning may be necessary. Dust or organic deposits are best removed using water, or window cleaner, and a soft cloth or cotton swab. Salt deposits should be dissolved with vinegar and removed with a cloth or cotton swab. **Salt deposits cannot be removed with solvents such as alcohol or acetone.** Use only gentle pressure when cleaning the diffuser with a cotton swab or soft cloth to avoid scratching the outer surface. The solvent should be allowed to do the cleaning, not mechanical force. **Never use abrasive material or cleaner on the diffuser.**

It is recommended that sensors be recalibrated every two years. See the Apogee webpage for details regarding return of sensors for recalibration (http://www.apogeeinstruments.com/tech-support-recalibration-repairs/).

TROUBLESHOOTING AND CUSTOMER SUPPORT

Independent Verification of Functionality

If the sensor does not communicate with the datalogger, use an ammeter to check the current drain. It should be near 37 mA when the sensor is powered. Any current drain significantly greater than approximately 37 mA indicates a problem with power supply to the sensors, wiring of the sensor, or sensor electronics.

Compatible Measurement Devices (Dataloggers/Controllers/Meters)

Any datalogger or meter with RS-232/RS-485 that can read/write float or integer values.

An example datalogger program for Campbell Scientific dataloggers can be found at https://www.apogeeinstruments.com/content/Quantum-Modbus.CR1.

Cable Length

All Apogee sensors use shielded cable to minimize electromagnetic interference. For best communication, the shield wire must be connected to an earth ground. This is particularly important when using the sensor with long lead lengths in electromagnetically noisy environments.

RS-232 Cable Length

If using an RS-232 serial interface, the cable length from the sensor to the controller should be kept short, no longer than 20 meters. For more information, see section 3.3.5 in this document: http://www.modbus.org/docs/Modbus_over_serial_line_V1_02.pdf

RS-485 Cable Length

If using an RS-485 serial interface, longer cable lengths may be used. The trunk cable can be up to 1000 meters long. The length of cable from the sensor to a tap on the trunk should be short, no more than 20 meters. For more information, see section 3.4 in this document: http://www.modbus.org/docs/Modbus_over_serial_line_V1_02.pdf

Troubleshooting Tips

- Make sure to use the green wire to select between RS-232 and RS-485.
- Make sure that the sensor is wired correctly (refer to wiring diagram).
- Make sure the sensor is powered by a power supply with a sufficient output (e.g., 12 V).
- Make sure to use the appropriate kind of variable when reading Modbus registers. Use a float variable for float registers and an integer variable for integer registers.
- Make sure the baudrate, stop bits, parity, byte order, and protocols match between the control program and the sensor. Default values are:
    - Baudrate: 19200
    - Stop bits: 1
    - Parity: Even
    - Byte order: ABCD (Big-Endian/Most Significant Byte First)
    - Protocol: RS-232 or RS-485

RETURN AND WARRANTY POLICY

RETURN POLICY

Apogee Instruments will accept returns within 30 days of purchase as long as the product is in new condition (to be determined by Apogee). Returns are subject to a 10 % restocking fee.

WARRANTY POLICY

What is Covered
All products manufactured by Apogee Instruments are warranted to be free from defects in materials and craftsmanship for a period of four (4) years from the date of shipment from our factory. To be considered for warranty coverage an item must be evaluated by Apogee.

Products not manufactured by Apogee (spectroradiometers, chlorophyll content meters, EE08-SS probes) are covered for a period of one (1) year.

What is Not Covered
The customer is responsible for all costs associated with the removal, reinstallation, and shipping of suspected warranty items to our factory.

The warranty does not cover equipment that has been damaged due to the following conditions:

1. Improper installation, use, or abuse.

2. Operation of the instrument outside of its specified operating range.

3. Natural occurrences such as lightning, fire, etc.

4. Unauthorized modification.

5. Improper or unauthorized repair.

Please note that nominal accuracy drift is normal over time. Routine recalibration of sensors/meters is considered part of proper maintenance and is not covered under warranty.

Who is Covered
This warranty covers the original purchaser of the product or another party who may own it during the warranty period.

What Apogee Will Do
At no charge Apogee will:

1. Either repair or replace (at our discretion) the item under warranty.

2. Ship the item back to the customer by the carrier of our choice.

Different or expedited shipping methods will be at the customer's expense.

How to Return an Item

1. Please do not send any products back to Apogee Instruments until you have received a Return Merchandise Authorization (RMA) number from our technical support department by submitting an online RMA form at www.apogeeinstruments.com/tech-support-recalibration-repairs/. We will use your RMA number for tracking of the service item. Call (435) 245-8012 or email techsupport@apogeeinstruments.com with questions.

2. For warranty evaluations, send all RMA sensors and meters back in the following condition: Clean the sensor's exterior and cord. Do not modify the sensors or wires, including splicing, cutting wire leads, etc. If a connector has been attached to the cable end, please include the mating connector – otherwise the sensor connector will be removed in order to complete the repair/recalibration. ***Note:*** *When sending back sensors for routine calibration that have Apogee's standard stainless-steel connectors, you only need to send the sensor with the 30 cm section of cable and one-half of the connector. We have mating connectors at our factory that can be used for calibrating the sensor.*

3. Please write the RMA number on the outside of the shipping container.

4. Return the item with freight pre-paid and fully insured to our factory address shown below. We are not responsible for any costs associated with the transportation of products across international borders.

Apogee Instruments, Inc.
721 West 1800 North Logan, UT
84321, USA

5. Upon receipt, Apogee Instruments will determine the cause of failure. If the product is found to be defective in terms of operation to the published specifications due to a failure of product materials or craftsmanship, Apogee Instruments will repair or replace the items free of charge. If it is determined that your product is not covered under warranty, you will be informed and given an estimated repair/replacement cost.

PRODUCTS BEYOND THE WARRANTY PERIOD

For issues with sensors beyond the warranty period, please contact Apogee at techsupport@apogeeinstruments.com to discuss repair or replacement options.

OTHER TERMS

The available remedy of defects under this warranty is for the repair or replacement of the original product, and Apogee Instruments is not responsible for any direct, indirect, incidental, or consequential damages, including but not limited to loss of income, loss of revenue, loss of profit, loss of data, loss of wages, loss of time, loss of sales, accruement of debts or expenses, injury to personal property, or injury to any person or any other type of damage or loss.

This limited warranty and any disputes arising out of or in connection with this limited warranty ("Disputes") shall be governed by the laws of the State of Utah, USA, excluding conflicts of law principles and excluding the Convention for the International Sale of Goods. The courts located in the State of Utah, USA, shall have exclusive jurisdiction over any Disputes.

This limited warranty gives you specific legal rights, and you may also have other rights, which vary from state to state and jurisdiction to jurisdiction, and which shall not be affected by this limited warranty. This warranty extends only to you and cannot by transferred or assigned. If any provision of this limited warranty is unlawful, void, or unenforceable, that provision shall be deemed severable and shall not affect any remaining provisions. In case of any inconsistency between the English and other versions of this limited warranty, the English version shall prevail.

This warranty cannot be changed, assumed, or amended by any other person or agreement

Copyright © 2023 Apogee Instruments, Inc.

APOGEE ePAR SERIES

MQ-610 & SQ-610 Series



MQ-610
(meter and sensor)

SQ-610
(sensor only)

Spectral Response

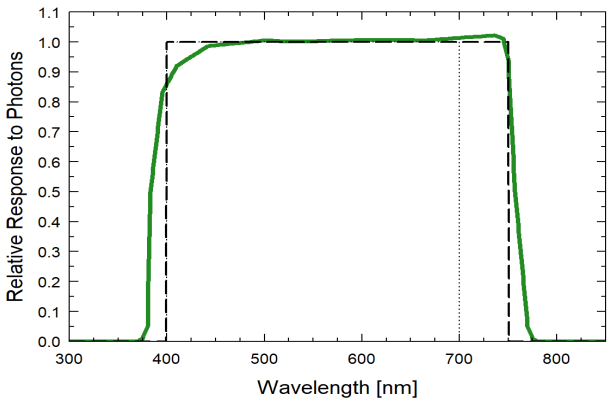

Spectral response of the ePAR sensor (green) compared to the "ePAR" target response (dashed) and the traditonal PAR response (dotted).

Product Specifications

	MQ-610	SQ-610-SS	SQ-612-SS	SQ-614-SS	SQ-615-SS	SQ-616	SQ-617-SS	SQ-618-SS
Power Supply	–	Self-powered	5 to 24 V DC	12 to 24 V DC	5.5 to 24 V DC	5 V USB	5.5 to 24 V DC	
Current Draw	–	–	at 12 V is 57 µA	Maximum of 20 mA	at 12 V is 57 µA	61 mA when logging	1.4 mA (quiescent), 1.8 mA (active)	RS-232 37 mA; RS-485 quiescent 37 mA, active 42 mA
Sensitivity	–	0.01 mV per µmol m^{-2} s^{-1}	0.625 mV per µmol m^{-2} s^{-1}	0.004 mA per µmol m^{-2} s^{-1}	1.25 mV per µmol m^{-2} s^{-1}	–		
Output Type	–	0 to 40 mV	0 to 2.5 V	4 to 20 mA	0 to 5 V	USB	SDI-12	Modbus
Resolution	–	–				0.1 µmol m^{-2} s^{-1}	–	
Calibration Factor	–	100 µmol m^{-2} s^{-1} per mV	1.6 µmol m^{-2} s^{-1} per mA	250 µmol m^{-2} s^{-1} per mA	0.8 µmol m^{-2} s^{-1} per mV	Custom for each sensor and stored in the firmware		
Calibration Uncertainty	± 5 %							
Measurement Range	0 to 4000 µmol m^{-2} s^{-1}							
Measurement Repeatability	Less than 0.5 %							
Long-term Drift	Less than 2 % per year							
Non-linearity	Less than 1 % (up to 4000 µmol m^{-2} s^{-1})							
Response Time	Less than 1 ms						0.6 s	–
Field of View	180°							
Spectral Range	383 to 757 nm ± 5 nm (wavelengths where response is greater than 50 % of maximum)							
Directional (Cosine) Response	± 2 % at 45° zenith angle, ± 5 % at 75° zenith angle							
Azmuth & Tilt Error	Less than 0.5 %	–						
Temperature Response	-0.11 ± 0.04 % per C							
Uncertainty in Daily Total	Less than 5 %	–						
Operating Environment	-40 to 70 C; 0 to 100 % relative humidity; sensor head can be submerged in water up to depths of 30 m; meter is not waterproof							
Dimensions	126 mm L, 70 mm W, 24 mm H	30.5 mm diameter, 37 mm height						

Overview

The new Apogee ePAR (extended photosynthetically active radiation) sensor was created to measure the wider 400-750 nm radiation range that cutting-edge research is showing to be photosynthetically active, beyond the traditional 400-700 nm range defined by McCree. Most of this transformative work to refine and define the ePAR range is being conducted by Dr. Shuyang Zhen and Dr. Bruce Bugbee at Utah State University.

Dimensions

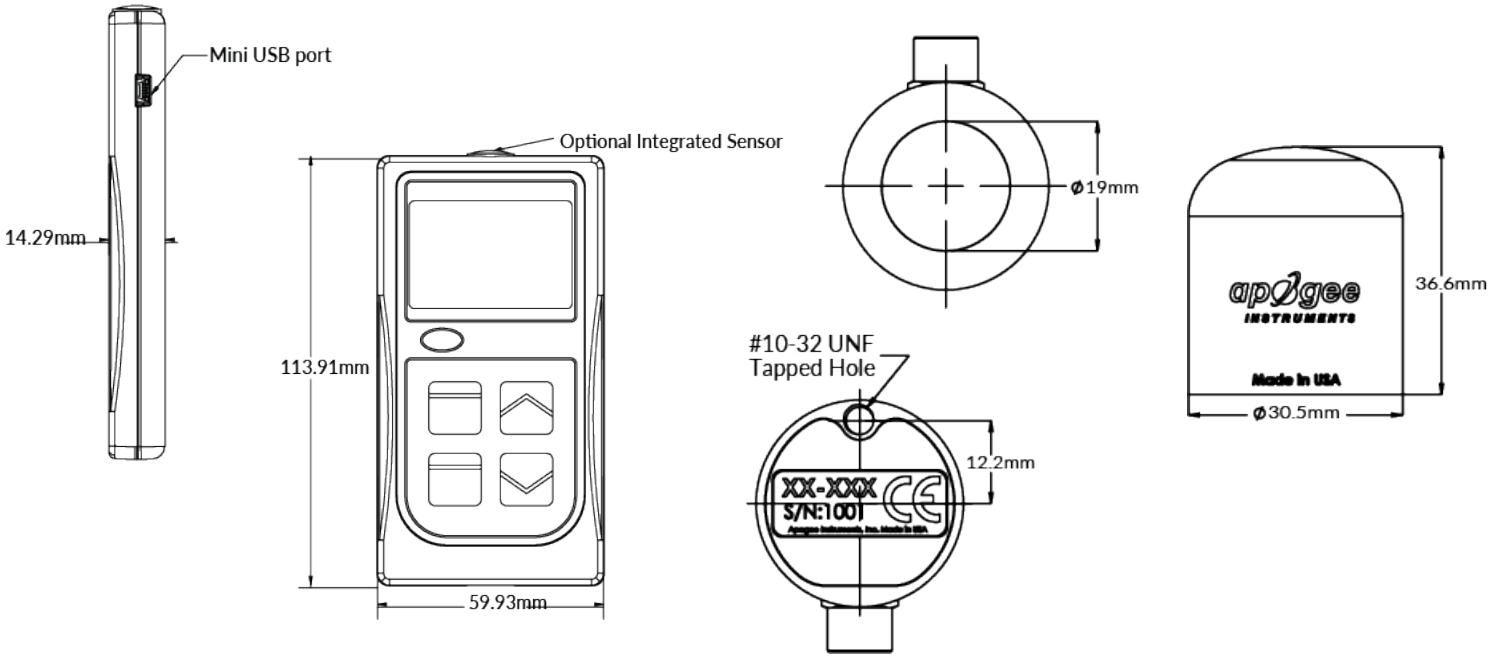

Features

TYPICAL APPLICATIONS

- Total ePAR intensity measurements over plant canopies in all growing environments
- Monitor and adjust grow lights
- Research plant morphogenic activity
- Photobiology studies

MULTIPLE OUTPUT OPTIONS

- 0 to 40 mV
- 0 to 5 V
- USB
- Modbus
- 0 to 2.5 V
- 4 to 20 mA
- SDI-12
- or hand-held meter

ACCURATE, STABLE MEASUREMENTS

Cosine-corrected with directional errors less than ± 5 % at a solar zenith angle of 75°. Long-term non-stability less than 2 % per year.

HIGH QUALITY CABLE

Pigtail-lead sensors feature on IP68, marine-grade stainless-steel cable connectors attached directly to the sensor head to simplify sensor removal for maintenance and recalibration.

CALIBRATION TRACEABILITY

Apogee Instruments SQ-600 series ePAR sensors are calibrated through side-by-side comparison to the mean of four transfer standard sensors under a reference lamp. The transfer standard sensors are recalibrated with a quartz halogen lamp traceable to the National Institute of Standards and Technology (NIST).



Cleaning Instructions

E+E Humidity Measuring Devices with Sensing Probe

your partner in sensor technology.

For the good long term performance of humidity measuring devices it is of highest importance that the sensing head is kept clean. For most applications choosing the appropriate filter cap is sufficient to achieve this.

In polluted applications the filter cap might get clogged. Long response time of the device indicates a dirty filter cap, which shall be replaced by an E+E original new one. Please see the choice of E+E filter caps in the Accessories data sheet at http://www.epluse.com/fileadmin/data/product/accessories/datasheet_accessories.pdf and contact your E+E sales representative for advice.

In certain applications even the correct choice of filter cap cannot stop all pollutants from getting inside the sensing head. Deposits of dirt or dust inside the sensing head can lead to wrong measurements results, mostly by acting like a low parallel impedance on the sensing elements. Such effects are usually stronger in applications with high humidity. In such situations the sensing head can be cleaned by the user.

PLEASE NOTE

- The E+E proprietary sensor coating offers additional protection of the sensing head and it is highly recommended in heavy polluted applications. Please contact the E+E sales representative for details.
- The cleaning procedure described below is efficient against pollution deposits such as dirt and dust. It is not appropriate for humidity sensing elements affected by chemicals, such as aggressive gases. Please contact E+E in case of sensors exposed to chemical agents.
- The cleaning procedure is appropriate for sensing elements with or without the E+E sensor coating.

Instructions for Humidity Sensors

1. Disconnect the device from the power supply.
2. Wipe clean the probe for preventing contamination of the sensing head with pollutants possibly deposited on the exterior of the probe. Use a clean soft cloth, wet or dry depending on the deposits on the probe. Wipe clean also the other parts of the device. Depending on the type, these can be the enclosure with electronics and the probe cable.

NOTICE

- Use only water and/or isopropyl alcohol for cleaning the probe and the other parts of the device. Other cleaning agents might affect the sensing elements.
- Do not attempt to clean the filter cap. This would only lead to its clogging. A dirty filter cap must be replaced by a new, original one, at the end of the cleaning process.

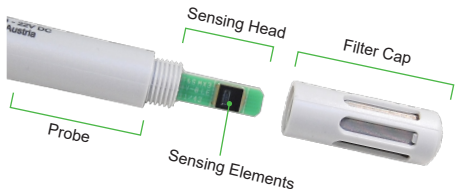

3. Remove (unscrew) the filter cap with utmost care, so that the filter cap does not touch at any time the sensing elements of the sensing head.

NOTICE

- Do never touch the sensing elements.
- Any attempt to clean mechanically the sensing elements such as rubbing or brushing leads certainly to their irreversible damage.

4. Place two glass vessels in the tray of an ultrasonic cleaner, one with clean Isopropyl alcohol and the other with clean deionized water. Then fill the tray of the ultrasonic cleaner with tap water up to the maximum level mark.





Fig. 1 Sensing head in isopropyl alcohol

5. Hold onto the sensing probe and place the sensing head in isopropyl alcohol for 3 minutes (Fig. 1). The sensing element, the leads and the sensor socket shall be immersed in the liquid.
   In case of heavy pollution, as in case of deposits which can be seen with the bare eye, continue this until the deposits are dissolved.

NOTICE

The sensing elements may not touch the vessels!

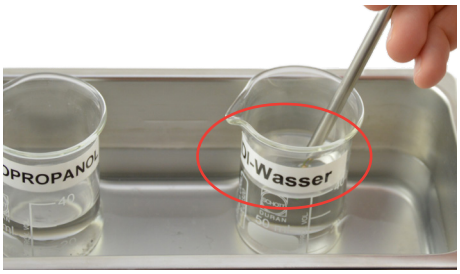

Fig. 2 Sensing head in deionized water

6. Hold onto the sensing probe and place the sensing head in deionized water for 3 minutes. (Fig. 2).
7. Let the sensing head dry free for about 30 minutes at room condition temperature.
8. Make sure by optical inspection that there are not water droplets on any part of the sensing head.
   Place on a new, original filter cap. This must be done with utmost care not to touch the sensing elements.
   For the choice of spare filter caps see accessories data sheet at
   http://www.epluse.com/fileadmin/data/product/accessories/datasheet_accessories.pdf.

NOTICE

Never reuse the old filter cap after cleaning the sensing head.

9. For each device to be cleaned use new clean isopropyl alcohol and deionized water, as well as clean glass vessels.

NOTICE

Do not reuse the isopropyl alcohol and the deionized water for cleaning a second sensor.

PLEASE NOTE

Best cleaning results are achieved by using an ultrasonic cleaner as described above. In case this is not available, perform the entire procedure without it, shaking gently the probe when placed in isopropyl alcohol and in deionized water.

E+E Moisture in Oil Measuring Devices with Sensing Probe

Cleaning of probe head including sensing elements from oil residue is recommended before they are immersed in other oil, prior to longer idle times in air or before calibration.

Intructions for Moisture in Oil Sensors

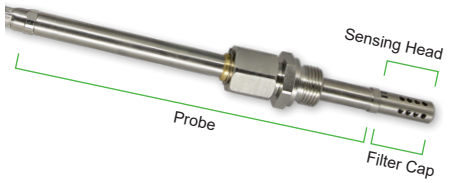

1. Disconnect the device from the power supply.
2. Immerse the measuring head in n-HEPTAN and swirl for approx. 30 seconds. Repeat this procedure in case the sensor is polluted heavily and exchange the n-HEPTAN if necessary.
3. Flush with tap water and air dry for about 30 minutes. If the contamination inside the filter cap is too strong, remove the filter cap and clean by proceeding as follows:
   - Remove the filter cap's screw lock with the help of a small screw driver.
   - Take off the filter cap and clean the sensing head as described above.
   - Replace the filter cap by a new one.
   - Fix the screw lock by pressing it towards the thread.

NOTICE

- Do not touch or rub the sensing element during the cleaning process!
- It is strongly advised NOT to try cleaning the sensor by mechanical means, such as rubbing the sensor with cotton material!

Slight oil streaks on the sensor element surface are considered to be clean.

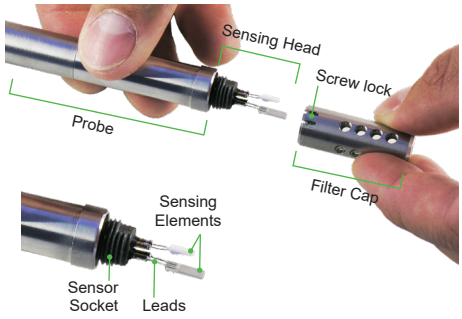

EXPERT ADVICE

For keeping the calibration equipment free from oil contamination, clean the sensing head with n-HETPAN in an ultrasonic cleaner for 3 minutes. If necessary also replace the filter cap by a new one.

E+E Elektronik Ges.m.b.H.
Langwiesen 7
4209 Engerwitzdorf | Austria
T +43 7235 605-0
F +43 7235 605-8
info@epluse.com
www.epluse.com

E+E

your partner
in sensor
technology.

Datasheet HTP201

Humidity and Temperature Probe with Analogue Outputs



www.epluse.com

HTP201

Humidity and Temperature Probe with Analogue Outputs

With its outstanding price performance ratio, HTP201 is the perfect solution for cost effective and reliable measurement of relative humidity (RH) and temperature (T) in most various industries.

Outstanding Measurement Performance with Patented Sensor Technology

The E+E RH/T sensing element with proprietary protection and sealed solder pads ensures excellent long-term performance of the HTP201 over the entire working range and even in dusty and dirty environment. Innovative PCB design inside the probe reduces self-heating relevantly.

Versatility and Robustness

Excellent protection against external influences is ensured by the combination of completely encapsulated electronics and the long-term stable E+E RH/T sensing element. Its IP65 stainless steel or polycarbonate enclosure and integrated cable or a threaded connector make it a versatile probe tackling even challenging applications.

Analogue Outputs

The RH and T measured data is available on two analogue outputs for voltage (0 - 1 V, 0 - 5 V or 0 - 10 V) or current (4 - 20 mA). In addition, the HTP201 has a passive T output (4-wire), a wide temperature and supply voltage range, making it a universally applicable probe.



HTP201 voltage version with stainless steel enclosure and stainless steel sinter filter



HTP201 current version with cable, polycarbonat enclosure and metal grid filter

Features

Measurement performance

- High RH / T accuracy
- Excellent long term stability
- Wide T range: - 40...+80 °C (- 40...+176 °F)
- T compensation
- Very low self-heating

Mechanical construction

- Stainless steel or polycarbonate enclosure
- Encapsulated electronics
- IP65



E+E RH / T sensing element

- Protected by E+E proprietary coating
- Patented sensor technology
- Sealed solder pads
- Very robust

Outputs

- Two analogue outputs
- 0 - 1 / 5 / 10 V
- 4 - 20 mA
- T passive output optional

Connection

- M12x1 Connector
- Flexible cable with
  1.5 / 3 / 5 m (4.9 / 9.8 / 16.4 ft)

Features

Protective Sensor Coating

The E+E proprietary sensor coating is a protective layer applied to the active surface of the sensing element. The coating substantially extends sensor lifetime and ensures optimal measurement performance in corrosive environment (salts, off-shore applications). Additionally, it improves the sensors' long term stability in dusty, dirty or oily applications by preventing stray impedance caused by deposits on the active sensor surface.

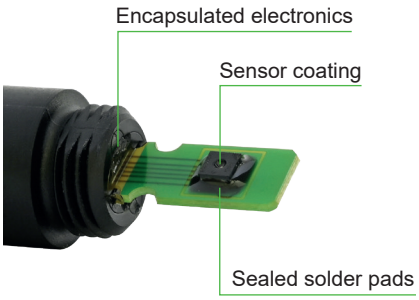

Sensing head with sensor coating and underfiller

Dimensions

Values in mm (inch)

Voltage versions

With connector (Type E9)

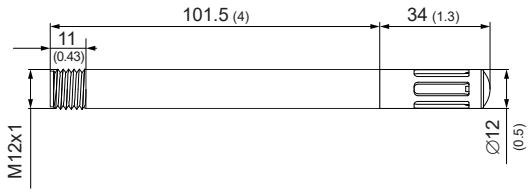

With cable (Type E8)

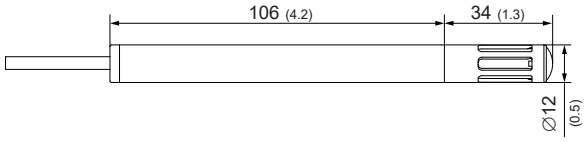

Current versions

With connector (Type E9)

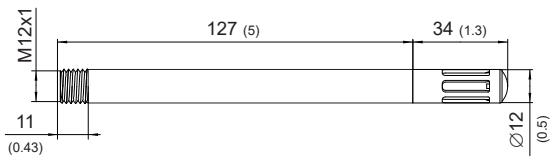

With cable (Type E8)

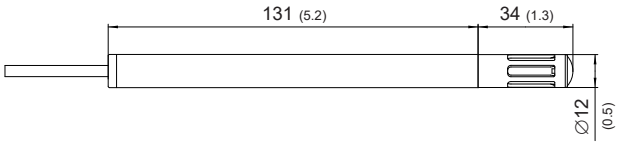

Technical Data

Measurands

Relative humidity (RH)

Measuring range	0...100 %RH
Accuracy[1)] @ 24 V DC, air velocity >0.2 m/s (>39 ft/min), incl. hysteresis, non-linearity and repeatability, current version R_L=250 Ω	
23 °C (0…100 %RH)	±2.5 %RH
0…40 °C (0…100 %RH)	±3 %RH
-20…80 °C (0…100 %RH)	±4 %RH
-40…-20 °C (0…100 %RH)	±5 %RH

1) Traceable to international standards, administrated by NIST, PTB, BEV,...
The accuracy statement includes the uncertainty of the factory calibration with an enhancement factor k=2 (2-times standard deviation).
The accuracy was calculated in accordance with EA-4/02 and with regard to GUM (Guide to the Expression of Uncertainty in Measurement).

Temperature (T)

Measuring range	-40...+80 °C (-40...+176 °F)
Accuracy Incl. hysteresis, non-linearity and repeatability	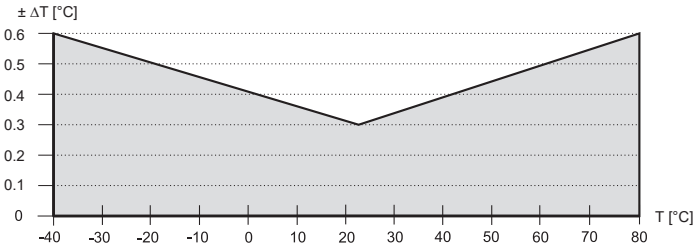

Outputs

Analogue

RH 0...100 % **T -40...+60/80 °C** (see ordering guide)			
Output	0 - 1 V	(-0.1 mA < I_L < 0.1 mA)	
Output	0 - 5 V	(-0.2 mA < I_L < 0.2 mA)	
Output	0 - 10 V	(-1.0 mA < I_L < 1.0 mA)	I_L = load current
Output	4 - 20 mA (2-wire)	R_L ≤ 500 Ω	R_L= load resistance

T Sensor Passive

With Model M6 only (RH + T passive)	4-wire-connection, T sensor according to ordering guide

Technical Data

General

Power supply class III USA & Canada: Class 2 supply necessary, max. voltage 30 V DC	
Output 0 - 1 V	3.6 - 30 V DC
Output 0 - 5 V	10 - 30 V DC
Output 0 - 10 V	15 - 30 V DC
Output 4 - 20 mA	9 V + R_L * 20 mA < V+ < 28 V DC — R_L= load resistance
Current consumption, typ.	
Voltage versions	1.5 mA
Current versions	According to output current
Electrical connection	
Plug versions	Plug M12x1, 4 poles
Cable versions	Cable 1.5 m (4.9 ft) / 3 m (9.8 ft) / 5 m (16.4 ft), PVC Ø4.3 mm, 4 x 0.25 mm² for RH + T with voltage output Ø4.3 mm, 3 x 0.25 mm² for RH + T with current output Ø4.8 mm, 6 x 0.14 mm² for RH + T passive with current output
Storage conditions	-40...+80 °C (-40...+176 °F) 0...95 %RH, non-condensing
Material	
Enclosure	Polycarbonate (PC) or stainless steel 1.4404
Probe cable (cable versions)	Polyvinyl chloride (PVC)
Protection rating	IP65
Electromagnetic compatibility[1)]	EN 61326-1 EN 61326-2-3 Industrial environment FCC Part15 Class B ICES-003 Class B
Shock and vibration	Tested according to EN 60068-2-64 and EN 60068-2-27
Conformity	CE UKCA

1) Analogue output 0 - 1 V is not protected against surge.

v1.1 / Modification rights reserved

Ordering Guide

	Feature	Description	Code		
			HTP201-		
Hardware Configuration	Model	RH + T	M1		-
		RH + T passive	-		M6
	Enclosure	Polycarbonate (PC)		No code	
		Stainless steel	HS2	-	
	Analogue output	0 - 1 V	A1	A1	-
		0 - 5 V	A2	A2	-
		0 - 10 V	A3	A3	-
		4 - 20 mA	-	A6	A6
	T sensor passive	Pt100 DIN A	-		TP1
		Pt1000 DIN A	-		TP3
		NTC10k, B3950 K	-		TP5
	Filter	Membrane, polycarbonate body	No code		
		Metal grid, polycarbonate body	F3		
		Stainless steel sintered	F4		
		Stainless steel - metal grid	F9	-	
	Electrical connection	Cable	E8		
		M12 connector, 4 poles	E9		-
	Connection cable length[1)]	1.5 m (4.9 ft)	KL150		
		3 m (9.8 ft)	KL300		
		5 m (16.4 ft)	KL500		
T Scale	T scaling low	-40 °C	No code		
	T scaling high	60 °C	No code		
		80 °C	SBH80		

1) Only in combination with the cable version

Order Example

HTP201-M1A3E8KL150

Feature	Code	Description
Model	M1	RH + T
Enclosure	No code	Polycarbonate (PC)
Analogue output	A3	0 - 10 V
Filter	No code	Membrane, polycarbonate body
Electrical connection	E8	Cable
Connection cable length	KL150	1.5 m (4.9 ft)
T scaling low	No code	-40 °C
T scaling high	No code	60 °C

v1.1 / Modification rights reserved

Order Example

HTP201-M1HS2A1F9E9SBH80

Feature	Code	Description
Model	**M1**	RH + T
Enclosure	**HS2**	Stainless steel
Analogue output	**A1**	0 - 1 V
Filter	**F9**	Stainless steel - metal grid
Electrical connection	**E9**	M12 connector, 4 poles
T scaling low	**No code**	-40 °C
T scaling high	**SBH80**	80 °C

Accessories

For further information see datasheet Accessories.

Accessories	Code
M12x1 connector, 4 pole socket, for self assembly	**HA010707**
Connection cable, 5 pole, M12x1 plug / socket, shielded, 2 m (6.6 ft) / 5 m (16.4 ft) /10 m (32.8 ft)	**HA010816/HA010817/HA010818**
Connection cable, 5 pole, M12x1 socket / free ends, shielded, 1.5 m (4.9 ft) / 5 m (16.4 ft) / 10 m (32.8 ft)	**HA010819/HA010820/HA010821**
Plastic mounting flange Ø12 mm (0.47") black	**HA010214**
Stainless steel flange Ø12 mm	**HA010201**
Wall mounting clip Ø12 mm (0.47")	**HA010211**
Stainless steel wall mounting clip Ø12 mm (0.47")	**HA010225**
Protection cap for Ø12 mm (0.47") probe	**HA010783**
Radiation shield with fixed clamping ring (M20x1.5)	**HA010502**

v1.1 / Modification rights reserved

Company Headquarters &
Production Site

E+E Elektronik Ges.m.b.H.
Langwiesen 7
4209 Engerwitzdorf | Austria
T +43 7235 605-0
F +43 7235 605-8
info@epluse.com
www.epluse.com

Subsidiaries

E+E Sensor Technology (Shanghai) Co., Ltd.
T +86 21 6117 6129
info@epluse.cn

E+E Elektronik France SARL
T +33 4 74 72 35 82
info.fr@epluse.com

E+E Elektronik Deutschland GmbH
T +49 6171 69411-0
info.de@epluse.com

E+E Elektronik India Private Limited
T +91 990 440 5400
info.in@epluse.com

E+E Elektronik Italia S.R.L.
T +39 02 2707 86 36
info.it@epluse.com

E+E Korea Co., Ltd.
T +82 31 732 6050
info.kr@epluse.com

E+E Elektronik Corporation
T +1 847 490 0520
info.us@epluse.com

your partner
in sensor
technology.

Version v1.1 | 10-2022
Modification rights reserved

www.epluse.com

User Manual

HTP201

Humidity and Temperature Probe with Analogue Outputs

YOUR PARTNER IN SENSOR TECHNOLOGY

ELEKTRONIK® Ges.m.b.H.

BA_HTP201 // v1.0 // Modification rights reserved

E+E Elektronik Ges.m.b.H. doesn‘t accept warranty and liability claims neither upon this publication nor in case of improper treatment of the described products.

The document may contain technical inaccuracies and typographical errors. The content will be revised on a regular basis. These changes will be implemented in later versions. The described products can be improved and changed at any time without prior notice.

© Copyright E+E Elektronik Ges.m.b.H. All rights reserved.

EMC note USA (FCC):

This equipment has been tested and found to comply with the limits for a Class A digital device, pursuant to part 15 of the FCC Rules. These limits are designed to provide reasonable protection against harmful interference when the equipment is operated in a commercial environment. This equipment generates, uses, and can radiate radio frequency energy and, if not installed and used in accordance with the instruction manual, may cause harmful interference to radio communications. Operation of this equipment in a residential area is likely to cause harmful interference in which case the user will be required to correct the interference at his own expense.

EMC note Canada (ICES-003):

CAN ICES-3 (A) / NMB-3 (A)

CONTENT

1 General 4
- 1.1 Explanation of Symbols 4
- 1.2 Safety Instructions 4
  - 1.2.1 General Safety Instructions 4
  - 1.2.2 Intended Use 4
  - 1.2.3 Mounting, Start-up and Operation 5
- 1.3 Environmental Aspects 5

2 Scope of Supply 5

3 Product Description 5
- 3.1 General 5
- 3.2 Dimensions 6
- 3.3 Electrical Connection 7
  - 3.3.1 M1 Models (RH + T) 7
  - 3.3.2 M6 Models (RH + T passive) 8

4 Installation 8
- 4.1 Wall and Ceiling Mount 8
- 4.2 Duct Mount 8
- 4.3 Recommendations for accurate Humidity and Temperature Measurement 8

5 Maintenance and Service 9
- 5.1 Cleaning 9
- 5.2 Filter Cap Replacement 9
- 5.3 Protection during Site Cleaning Operations 10
- 5.4 Repairs 10
- 5.5 Spare Parts 10

6 Accessories 10

7 Technical Data 11

1 General

This user manual serves for ensuring proper handling and optimal functioning of the device. The user manual shall be read before commissioning the equipment and it shall be provided to all staff involved in transport, installation, operation, maintenance and repair. The user manual may not be used for the purposes of competition without the written consent of E+E Elektronik® and may not be forwarded to third parties. Copies may be made for internal purposes. All information, technical data and diagrams included in these instructions are based on the information available at the time of writing.

Please find this document and further product information on our website at www.epluse.com/htp201.

1.1 Explanation of Symbols

This symbol indicates safety information.
It is essential that all safety information is strictly observed. Failure to comply with this information can lead to personal injuries or damage to property. E+E Elektronik® assumes no liability if this happens.

This symbol indicates instructions.
The instructions shall be observed in order to reach optimal performance of the device.

1.2 Safety Instructions

1.2.1 General Safety Instructions

- Avoid any unnecessary mechanical stress and inappropriate use.
- When replacing the filter cap make sure not to touch the sensing elements.
- The device must be operated with the filter cap on at all times.
- Installation, electrical connection, maintenance and commissioning shall be performed by qualified personnel only.
- Use the HTP201 only as intended and observe all technical specifications.
- Do not use HTP201 in explosive atmosphere or for measurement of aggressive gases.

1.2.2 Intended Use

The HTP201 is intended for highly accurate and cost effective humidity (RH) and temperature (T) measurement in demanding process applications. The RH and T measured data is available on two analogue outputs for voltage (0 - 1 V, 0 - 5 V or 0 - 10 V) or current (4 - 20 mA, 2-wire). In addition, the HTP201 has a passive T output (4-wire), a wide temperature and supply voltage range, making it a universally applicable probe.

The use of the HTP201 in any other way than described in this manual bears a safety risk for people and the entire measurement installation and is therefore not allowed.
The manufacturer cannot be hold responsible for damages as a result of incorrect handling, installation, and maintenance of the equipment.

In order to avoid damage to the instrument or health hazards, the measuring equipment must never be manipulated with tools that are not specifically described in this manual.

The sensor may only be utilized in accordance with the conditions defined in the technical data. Otherwise, measurement inaccuracies will occur and equipment failures cannot be ruled out.

The steps recommended by the manufacturer for installation, inspections and maintenance work must be observed and carried out for the safety of the user and for the functionality of the equipment.

Unauthorized product modification leads to loss of all warranty claims. This may be accomplished only with an explicit permission of E+E Elektronik®!

1.2.3 Mounting, Start-up and Operation

The HTP201 humidity and temperature probe has been produced under state of the art manufacturing conditions, has been thoroughly tested and has left the factory fulfilling all safety criteria. The manufacturer has taken all precautions to ensure safe operation of the device. The user must ensure that the device is set up and installed in a manner that does not have a negative effect on its safe use.

The user is responsible for observing all applicable safety guidelines, local and international, with respect to safe installation and operation on the device. This user manual contains information and warnings that must be observed by the user in order to ensure safe operation.

- Mounting, start-up, operation and maintenance of the device may be performed by qualified staff only. Such staff must be authorized by the plant operator to carry out the mentioned activities.
- The qualified staff must have read and understood this user manual and must follow the instructions contained within.
- All process and electrical connections shall be thoroughly checked by authorized staff before putting the device into operation.
- Do not install or start-up a device supposed to be faulty. Make sure that such devices are not accidentally used by marking them clearly as faulty.
- A faulty device may only be investigated and possibly repaired by qualified, trained and authorized staff. If the fault cannot be fixed, the device shall be removed from the process.
- Service operations other than described in this user manual may only be performed by the manufacturer.

Disclaimer of Liability
The manufacturer or their delegated representative is only liable in case of intent or gross negligence. The accountability is limited to the value of the order issued at the time to the manufacturer. The manufacturer is not liable for damages, originated from disregarding the safety instructions or violating the instructions of the manual or operating conditions. Consequential damages are excluded from any liability.

1.3 Environmental Aspects



Products from E+E Elektronik® are developed and manufactured observing of all relevant requirements with respect to environment protection. Please observe local regulations for the device disposal.



For disposal, the individual components of the device must be separated according to local recycling regulations. The electronics shall be disposed of correctly as electronics waste.

2 Scope of Supply

- HTP201 – Humidity and Temperature Probe with Analogue Outputs according to ordering code

3 Product Description

3.1 General

The HTP201 is a robust probe for relative humidity and temperature measurement. Its IP65 rating, the E+E proprietary protective sensor coating and encapsulated electronics make it ideal for highest requirements. The HTP201 is typically implemented in demanding process and climate control applications like in agriculture, life stock, food, pharma or clean rooms. Its stainless steel or polycarbonate enclosure and integrated cable or a threaded connector together with the wide choice of filter caps make it a versatile probe tackling even challenging applications. Installation is simplified by various mounting options which are supported by E+E accessories.

3.2 Dimensions

Voltage versions

With connector (Type E9)

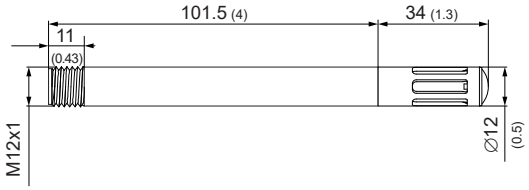

With cable (Type E8)

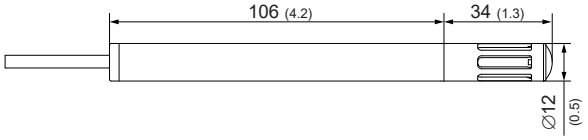

Current versions

With connector (Type E9)

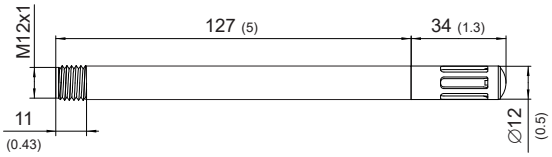

With cable (Type E8)

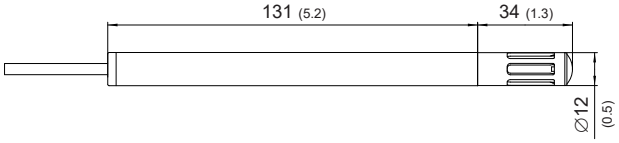

Fig. 1 Dimensions of HTP201 in mm (inch)

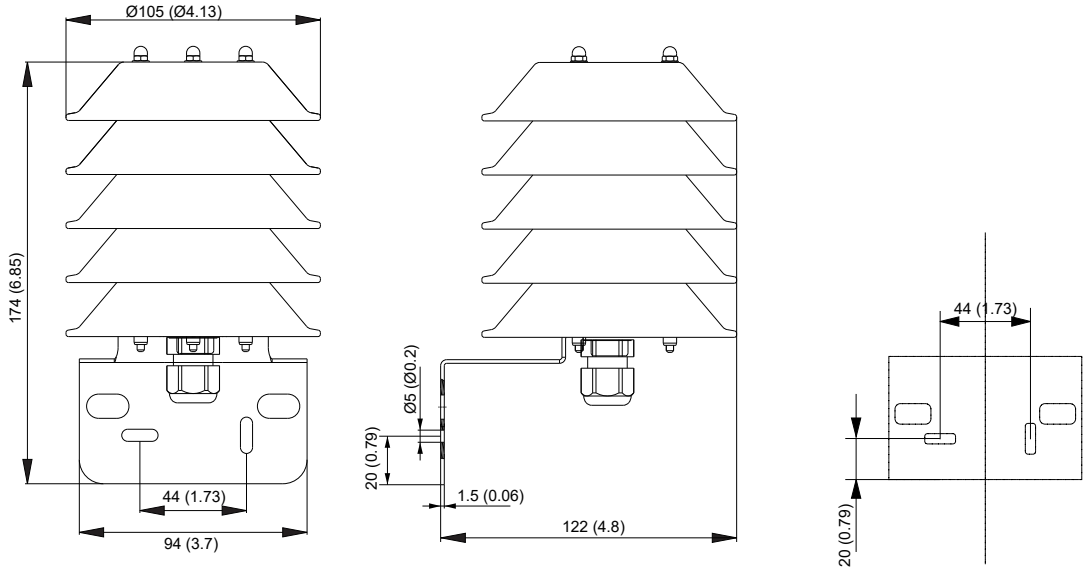

Fig. 2 Dimensions of optional radiation shield (ordering code HA010502) in mm (inch)

3.3 Electrical Connection

Important note:
The manufacturer cannot be held responsible for personal injuries or damage to property as a result of incorrect handling, installation, wiring, power supply and maintenance of the device.

3.3.1 M1 Models (RH + T)

Voltage versions (A1/A2/A3)
With connector (HTP201-M1xE9x)



M12 device plug
front view

Pin number	Function
1	Supply voltage V+
2	RH
3	GND
4	T

With cable (HTP201-M1xE8x)

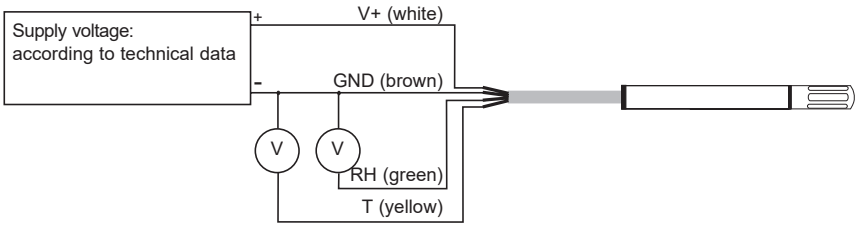

Current version (A6)
With connector (HTP201-M1A6xE9)

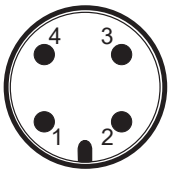

M12 device plug
front view

Pin number	Function
1	Supply voltage V+
2	RH
3	not connected
4	T

With cable (HTP201-M1A6xE8x)

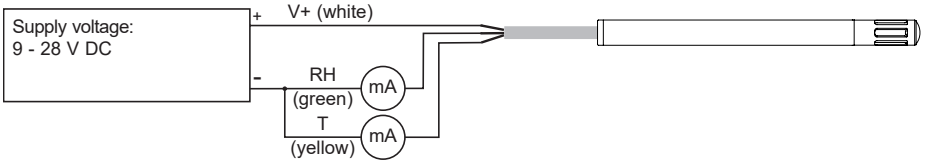

3.3.2 M6 Models (RH + T passive)

Current version (A6)
With connector (HTP201-M6A6xE8x)

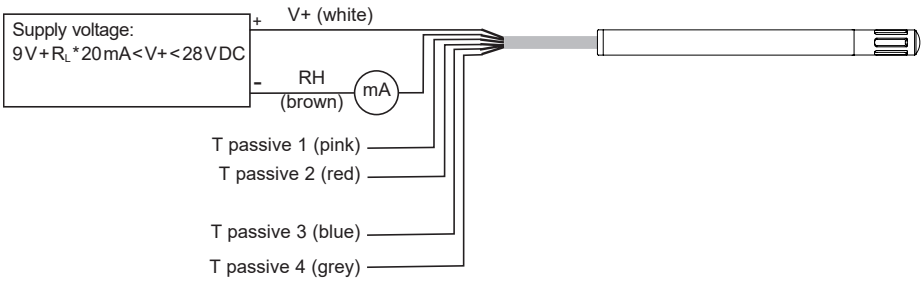

4 Installation

4.1 Wall and Ceiling Mount

Best measurement performance is achieved when the entire probe is located inside the environment to be monitored.
In such a case, the HTP201 may be for instance fixed onto a wall with the mounting clip HA010211 (for polycarbonate) or HA010225 (for stainless steel, both not included in the scope of supply, see data sheet “Accessories”), or freely hang from the ceiling on the connection cable.



Fig. 3 Optional wall and ceiling mount (ordering code HA010211)

4.2 Duct Mount

The probe also can be installed into a duct using the plastic flange HA010214 or the stainless steel flange HA010201 (not included in the scope of supply, see data sheet “Accessories”).



Fig. 4 Optional plastic flange (ordering code HA010214)



Fig. 5 Optional stainless steel flange (ordering code HA010201)

4.3 Recommendations for accurate Humidity and Temperature Measurement

- In case the HTP201 probe is not entirely located in the environment to be monitored, large temperature differences along the probe will lead to temperature gradients. These will have an influence on the accuracy. Therefore, it is of paramount importance to minimize the temperature gradients. The biggest part of the probe shall be located in the target environment and the rest shall be thermally well insulated.

- For outdoor applications the HTP201 shall be equipped with a radiation shield (HA010502) which provides protection from rain, snow and ice. This also causes a natural ventilation which largely prevents overheating of the probe in the sun and thus a distortion of the measured values.

- Best accuracy is achieved with a velocity of min. 0.2 m/s of the air surrounding the probe. Depending on the installation position, flow direction and flow velocity, the accuracy may decline. The following table gives a concise overview. Please note that the vertical positioning with the sensing element upside is the most sensitive one concerning accuracy. Because of possible self heating due to the sensor electronics, it is crucial to have the indicated air flow velocity.

Flow direction of medium		
←	> 0.2 m/s	> 0.2 m/s
→	This type of mounting is not recommended	> 0.2 m/s
↑	> 0.2 m/s	This type of mounting is not recommended
↓	> 0.2 m/s	> 0.2 m/s

Tab. 1 Mounting position, air velocity and accuracy

5 Maintenance and Service

HTP201 does not require any special maintenance, nevertheless for high accurate measurements especially over wide RH and T ranges it is recommended to calibrate the probe every 12 months. If needed, the enclosure or the sensing element may be cleaned as described below.

5.1 Cleaning

Use a damp soft cloth to remove deposits of dust or dirt from the exterior of the probe. Do not use any solvents or abrasive cleaning agents.

In case of dusty, oily and polluted environment:
- Use a damp soft cloth to remove deposits of dust or dirt from the exterior of the probe. Do not use any solvents or abrasive cleaning agents.
- The filter cap shall be replaced once in a while with an E+E original one (see below).
- If needed, the sensing element of the humidity probe can be cleaned by the user (see cleaning instructions - www.epluse.com/cleaning-instructions).

5.2 Filter Cap Replacement

In a dusty or polluted environment it might be necessary to replace the filter cap once in a while. In most of the cases, a clogged filter shows visible contamination or dirt. Longer response time of the humidity measurement also indicates a clogged filter cap. In such cases, replace the filter by a new, original one, see chapter 5.5 Spare Parts.

Procedure
- Turn the filter cap counter-clockwise for removing it.
- Install the new filter cap finger tight by turning it clockwise.

While replacing the filter cap take very good care to not touch or rub the sensing element.

5.3 Protection during Site Cleaning Operations

During site cleaning or sterilization process, if the HTP201 remains on the measuring site the sensing head can be protected with the optional protection cap for 12 mm (0.47") probe (HA010783, see datasheet “Accessories”).
In case the probe is removed from the site, it is recommended to apply the protection cap for the M12 cable socket (HA010781) and the one for the HTP201 M12 plug of (HA010782).



Fig. 6 Protection cap for Ø12 mm (0.47") probe (ordering code HA010783)



Fig. 7 Protection cap for M12 socket (ordering code HA010781)



Fig. 8 Protection cap for M12 plug (ordering code HA010782)

5.4 Repairs

Repairs may be carried out by the manufacturer only. The attempt of unauthorized repair excludes any warranty claims.

5.5 Spare Parts

Description	Order code
Filter caps for probes with Ø12 mm	**Please refer to the datasheet “Accessories“**

6 Accessories

For further information see datasheet Accessories.

General	Order code
M12x1 connector, 4 pole socket, for self assembly	**HA010707**
Connection cable, 5 pole, M12x1 plug / socket, shielded, 2 m (6.6 ft) / 5 m (16.4 ft) /10 m (32.8 ft)	**HA010816/HA010817/ HA010818**
Connection cable, 5 pole, M12x1 socket / free ends, shielded, 1.5 m (4.9 ft) / 5 m (16.4 ft) / 10 m (32.8 ft)	**HA010819/HA010820/ HA010821**
Plastic mounting flange Ø12 mm (0.47") black	**HA010214**
Stainless steel flange Ø12 mm	**HA010201**
Plastic wall mounting clip Ø12 mm (0.47")	**HA010211**
Stainless steel wall mounting clip Ø12 mm (0.47")	**HA010225**
Protection cap for Ø12 mm (0.47") probe	**HA010783**
Protection cap for M12 socket	**HA010781**
Protection cap for M12 plug	**HA010782**
Radiation shield with fixed clamping ring (M20x1.5)	**HA010502**

7 Technical Data

Measurands

Relative humidity (RH)

Measuring range	0...100 %RH
Accuracy[1)] @ 24 V DC, air velocity >0.2 m/s (>39 ft/min), incl. hysteresis, non-linearity and repeatability, current version R_L=250 Ω	
23 °C (0…100 %RH)	±2.5 %RH
0…40 °C (0…100 %RH)	±3 %RH
-20…80 °C (0…100 %RH)	±4 %RH
-40…-20 °C (0…100 %RH)	±5 %RH

1) Traceable to international standards, administrated by NIST, PTB, BEV,...
The accuracy statement includes the uncertainty of the factory calibration with an enhancement factor k=2 (2-times standard deviation).
The accuracy was calculated in accordance with EA-4/02 and with regard to GUM (Guide to the Expression of Uncertainty in Measurement).

Temperature (T)

Measuring range	-40...+80 °C (-40...+176 °F)
Accuracy Incl. hysteresis, non-linearity and repeatability	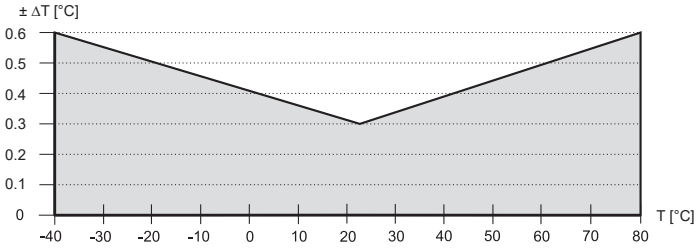

Outputs

Analogue

RH 0...100 % **T -40...+60/80 °C** (see ordering guide)			
Output	0 - 1 V	(-0.1 mA < I_L < 0.1 mA)	
Output	0 - 5 V	(-0.2 mA < I_L < 0.2 mA)	
Output	0 - 10 V	(-1.0 mA < I_L < 1.0 mA)	I_L = load current
Output	4 - 20 mA (2-wire)	R_L ≤ 500 Ω	R_L= load resistance

T Sensor Passive

With Model M6 only (RH + T passive)	4-wire-connection, T sensor according to ordering guide

General

Power supply class III USA & Canada: Class 2 supply necessary, max. voltage 30 V DC	
Output 0 - 1 V	3.6 - 30 V DC
Output 0 - 5 V	10 - 30 V DC
Output 0 - 10 V	15 - 30 V DC
Output 4 - 20 mA	9 V + R_L * 20 mA < V+ < 28 V DC — R_L= load resistance
Current consumption, typ.	
Voltage versions	1.5 mA
Current versions	According to output current
Electrical connection	
Plug versions	Plug M12x1, 4 poles
Cable versions	Cable 1.5 m (4.9 ft) / 3 m (9.8 ft) / 5 m (16.4 ft), PVC Ø4.3 mm, 4 x 0.25 mm² for RH + T with voltage output Ø4.3 mm, 3 x 0.25 mm² for RH + T with current output Ø4.8 mm, 6 x 0.14 mm² for RH + T passive with current output
Storage conditions	-40...+80 °C (-40...+176 °F) 0...95 %RH, non-condensing
Material	
Enclosure	Polycarbonate (PC) or stainless steel 1.4404
Probe cable (cable versions)	Polyvinyl chloride (PVC)
Protection rating	IP65
Electromagnetic compatibility[1)]	EN 61326-1 — EN 61326-2-3 — Industrial environment FCC Part15 Class B — ICES-003 Class B
Shock and vibration	Tested according to EN 60068-2-64 and EN 60068-2-27
Conformity	CE UKCA

1) Analogue output 0 - 1 V is not protected against surge.



HEADQUARTERS

E+E Elektronik Ges.m.b.H.
Langwiesen 7
4209 Engerwitzdorf
Austria
Tel.: +43 7235 605-0
E-mail: info@epluse.com
Web: www.epluse.com

SUBSIDIARIES

E+E Elektronik China
18F, Kaidi Financial Building,
No.1088 XiangYin Road
200433 Shanghai
Tel.: +86 21 6117 6129
E-mail: info@epluse.cn

E+E Elektronik France
47 Avenue de l'Europe
92310 Sèvres
Tel.: +33 4 74 72 35 82
E-mail: info@epluse.fr

E+E Elektronik Germany
Obere Zeil 2
61440 Oberursel
Tel.: +49 6171 69411-0
E-mail: info@epluse.de

E+E Elektronik India
801, Sakhi Vihar Road
400072 Mumbai
Tel.: +91 990 440 5400
E-mail: info.in@epluse.com

E+E Elektronik Italy
Via Alghero 17/19
20128 Milano (MI)
Tel.: +39 02 2707 86 36
E-mail: info@epluse.it

E+E Elektronik Korea
Suite 2001, Heungdeok IT
Valley Towerdong, 13,
Heungdeok 1-ro, Giheung-gu
16954 Yongin-si, Gyeonggi-do
Tel.: +82 31 732 6050
E-mail: info@epluse.co.kr

E+E Elektronik USA
333 East State Parkway
Schaumburg, IL 60173
Tel.: +1 847 490 0520
E-mail: office@epluse.com

HD3910.1 – HD3910.2
Probes for soil volumetric water content measurement

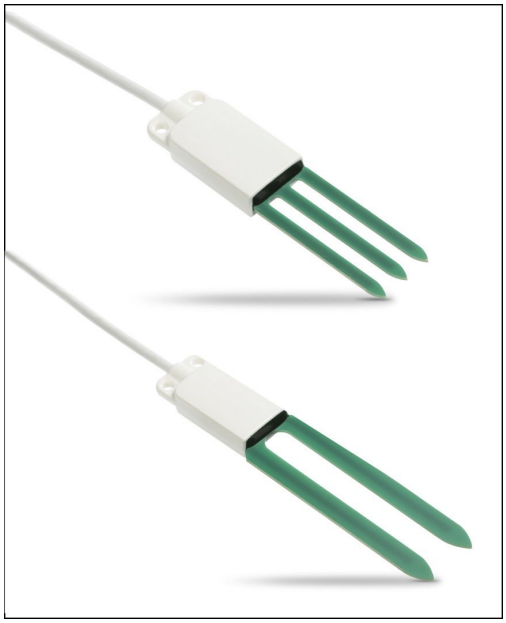

- Measurement of the soil volumetric water content with 2 electrodes (**HD3910.1**) or 3 electrodes (**HD3910.2**) for restricted volumes
- Measurement of the soil temperature
- Various output options available (depending on model): digital RS485 with MODBUS-RTU protocol, digital SDI-12 or analog voltage
- Accurate and stable measure over time
- Degree of protection IP 67
- Minimal invasiveness in the soil
- Easy to install

APPLICATION

- Agriculture
- Hydrology
- Geology

DESCRIPTION

The probes **HD3910.1** (two electrodes) and **HD3910.2** (three electrodes) measure the soil volumetric water content (VWC) by using a capacitive measurement principle which allows fast measurements in the field and with minimal invasiveness.

The three-electrode probe **HD3910.2** is particularly suitable for the measurement in small volumes, for example for cultivations in pots.

The probes are factory-calibrated and do not require any further calibration by the end user.

The circuit board is protected inside a housing made of plastic material and sealed with epoxy resin which allows achieving reliable measurements even in harsh environmental conditions.

The version with **RS485** digital output with **MODBUS-RTU** protocol allows the use of even very long connection cables. It can be connected to the data loggers HD32MT.1 and HD32MT.3 or to any other data logger with RS485 MODBUS-RTU input.

The version with **SDI-12** digital output is compatible with version 1.3 of the protocol and can be connected to the data logger HD32MT.3 or to any other data logger with SDI-12 input.

The version with analog output has two 0.5…3 V standard voltage outputs: one for the volumetric water content and one for the temperature. On request, 0…2.5 V, 0…5 V or 0…10 V outputs.

The probes are equipped with a fixed cable, 5 or 10m standard length, with open wires at the end.

VOLUMETRIC WATER CONTENT

The moist soil is composed of a solid part (minerals), a liquid part (generally water) and a gaseous part (air, water vapor).

The Volumetric Water Content (VWC) is defined as the ratio between the volume occupied by the water (V_w) in a certain portion of the soil and the total volume of the soil portion (V):

$$VWC = \frac{Vw}{V}$$

It can also be expressed as a percentage (% VWC) of the water volume in the total volume.

The volumetric water content is a parameter used in hydrology for the study of the hydraulic properties of the soil, and in agriculture to determine the need to irrigate crops.

TECHNICAL SPECIFICATIONS

Volumetric water content	
Measuring principle	Capacitive
Measuring range	0…60% VWC
Resolution	0.1%
Accuracy (@ 23 °C)	± 3 % between 0 and 50% VWC (standard mineral soil, EC < 5 mS/cm)
Measuring volume	∅= 100 mm x H=150 mm for the 2-electrode probe ∅= 80 mm x H=110 mm for the 3-electrode probe
Sensor operating temperature	-40…+60°C
Temperature	
Sensor	NTC 10 kΩ @ 25°C
Measuring range	-40…+60°C
Resolution	0.1°C
Accuracy	± 0.5°C
Long-term stability	0.1°C / year
Power supply	3.6…30 Vdc for versions with 0…2.5 V analog output 5…30 Vdc for versions with RS485 output and versions with 0.5…3 V analog output 6…30 Vdc for versions with SDI-12 output 7…30 Vdc for versions with 0…5 V analog output 12…30 Vdc for versions with 0…10 V analog output
Consumption	*Versions with RS485 output:* 2 mA average / 15 mA peak @ 12 Vdc *Versions with analog output:* 2.5 mA average / 15 mA peak @ 12 Vdc *Versions with SDI-12 output:* 300 µA @ 12 Vdc in standby <15 mA @ 12 Vdc during measurement
Output	Depending on model: • RS485 with MODBUS-RTU protocol • SDI-12 • 0.5…3 V analog voltage (0.5 V=0 %VWC or -40 °C , 3 V=60 %VWC or +60 °C, minimum load resistence 10 kΩ)
Materials	Handle: thermoplastic material and epoxy resin Electrodes: epoxy glass, thickness 2 mm
Connection	Fixed cable with open wires at the end, length 5 or 10 m standard
Protection degree	IP 67
Weight	150 g approx. (including the 5 m cable)

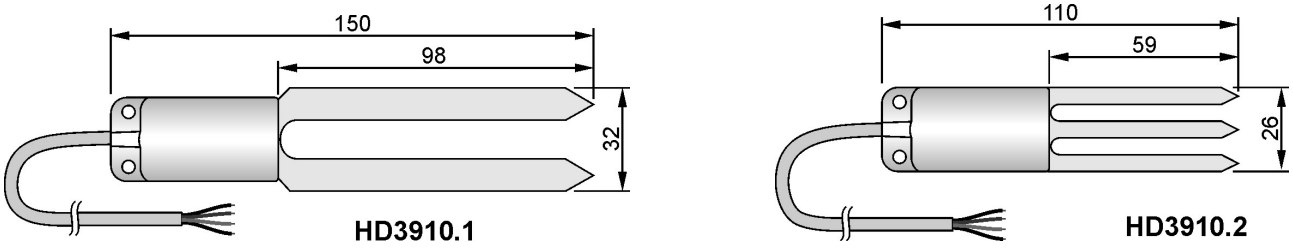

Fig. 1: dimensions (mm)

INSTALLATION

By means of an accessory, perform a hole into the soil deep enough to accommodate the probe. Never use the probe to make the hole in the soil, in order to avoid mechanical damage to the probe itself.

Once the hole was done, insert the probe **completely** into the soil so that the entire handle is covered by the ground: the temperature sensor is located inside the handle, close to the electrodes; therefore, it is necessary that the handle is immersed in the soil for a correct detection of the temperature.

After the introduction of the probe, fill in the empty spaces between the soil and the probe with some soil made powder. To obtain accurate measurements, the soil should be in contact with the electrodes and the probe handle.

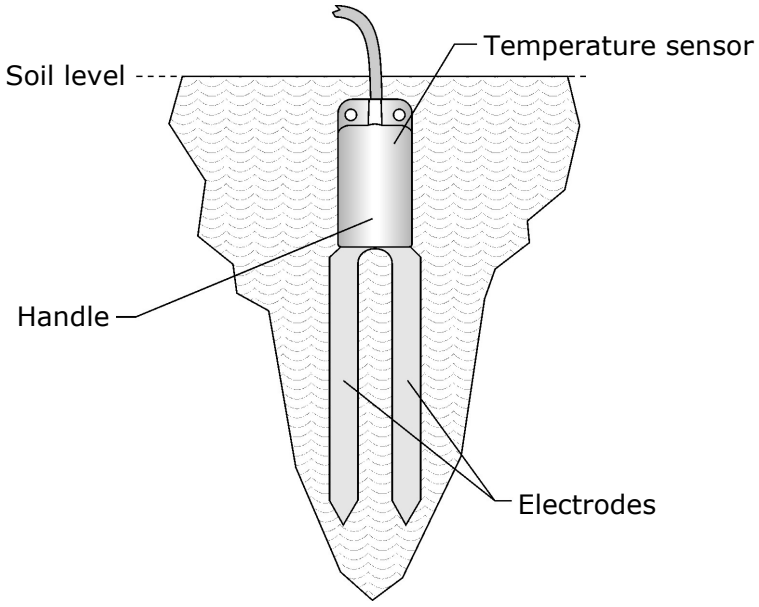

Fig. 2: Installation

The probe can be oriented in any direction, but it is advisable to place it vertically into the ground, so to not hinder the flow of water downward and to minimize the influence of the probe in the soil behavior.

Warnings:

- The portion of soil in which the probe is inserted must be uniform, without air gaps, and not too compact as it would make the introduction of the probe difficult.
- Pay attention to the presence of roots, stones or other objects present in the subsurface that may come between the electrodes and affect the measure.
- Do not use excessive force when introducing the probe, so to avoid irreparable damage to the electrodes.
- The probe measures the water content of the soil volume immediately surrounding the electrodes: position the probe so that there are no objects close to the probe, such as metal poles for example, that may affect the field of action of the probe itself.
- Indicate the presence of the probe during the maintenance operations of the soil (e.g. lawn mowing, ploughing, mechanized harvesting, etc.).
- In order to remove the probe from the soil, grab the handle and pull it upwards. **During the extraction, remove the probe vertically, by avoiding tilt that would damage the electrodes.**
- **Do not remove the probe by pulling the cable.**

CONNECTIONS

Wire color	Function		
	RS485 output	**SDI-12 output**	**Analog output**
Black	Negative power supply	Negative power supply/output	Negative power supply/output
Red	Positive power supply	Positive power supply	Positive power supply
White	RS485 A/-	Positive SDI-12 output	Positive %VWC output
Green	RS485 B/+	---	Positive temperature output

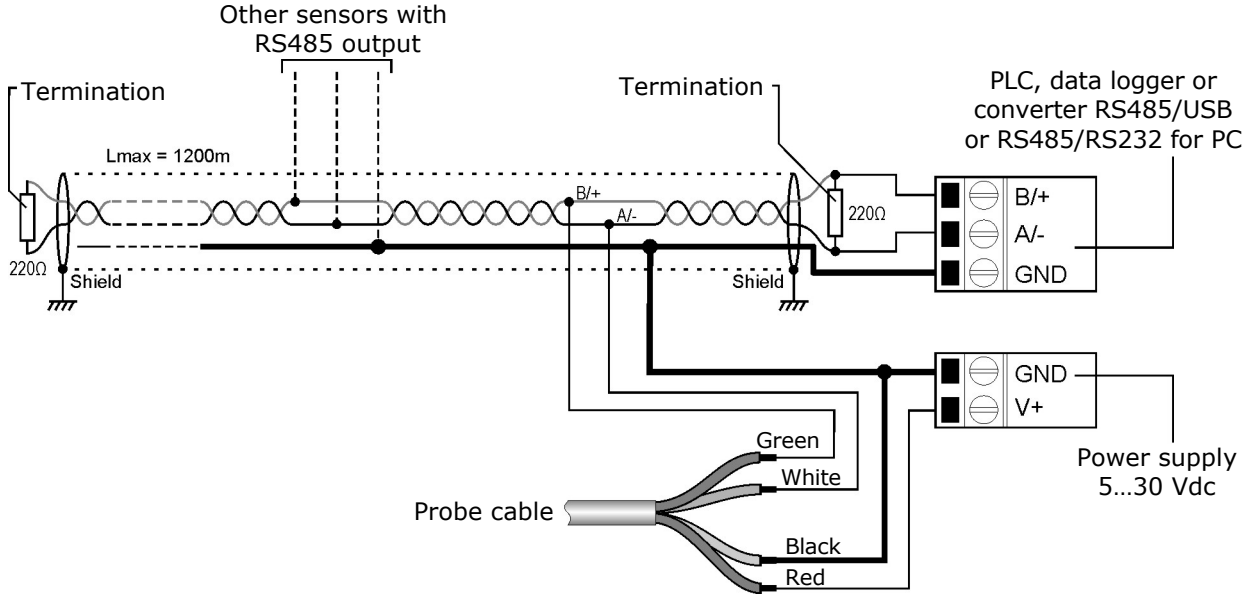

Fig. 3: RS485 connection

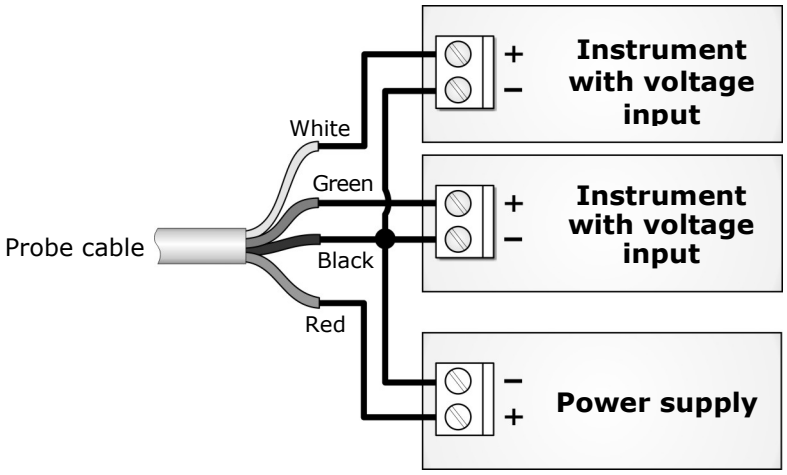

Fig. 4: analog outputs connection

Connect the cable shield to the negative of power supply.

SETTING OF RS485 COMMUNICATION PARAMETERS

Before connecting the probe to the RS485 network you must assign an address and set the communication parameters, if different from the factory preset.

The parameter setting is performed by connecting the probe to the PC by using a RS485/USB or RS485/RS232 converter. The probe must be powered separately. If RS485/USB converter is used it is necessary to install the appropriate USB drivers in the PC.

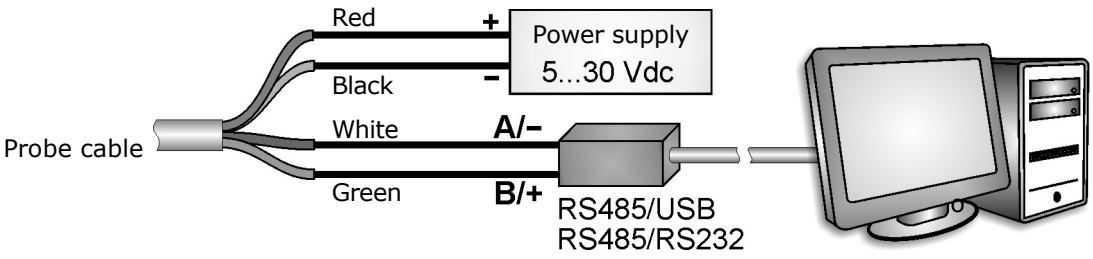

Fig. 5: connection to PC

NOTES ON THE INSTALLATION OF UNSIGNED USB DRIVERS: before installing unsigned USB drivers into operating systems starting from Windows 7, it is necessary to restart the PC disabling the driver signature request. If the operating system is 64-bit, even after installation, it is necessary to disable the request of the driver signature every time the PC is restarted.

Procedure for setting the parameters

1. Start a serial communication program, HyperTerminal for example. Set the communication parameters the same as those set in the instrument. By default, the parameters are:

   Baud Rate = 19200
   Data Bits = 8
   Parity = Even
   Stop Bits = 1

   In the program, set the number of the COM port to which you connect the probe.

2. Type three times the character **|** (124 decimal code ASCII character). The probe replies with **@**.

3. Within 10 seconds from the probe reply, send the command **@** (64 decimal code ASCII character followed by the Enter key). The probe replies with **&**.

   Note: if the probe does not receive the **@** command within 10 seconds, the Modbus mode is activated again.

4. Send the command **CAL USER ON**.

   Note: the CAL USER ON command is disabled after an inactivity of 5 minutes.

5. Send the following serial commands to set the RS485 MODBUS parameters:

Command	Reply	Description
CMAnnn	&|	Set address RS485 to nnn Ranging from 1 to 247. Preset on 1
CMBn	&|	Set RS485 Baud Rate: n=**0** ⇒ 9600, n=**1** ⇒ 19200 Preset on 1 ⇒ 19200
CMPn	&|	Set RS485 transmission mode (data bits, parity, stop bits): n=**0** ⇒ 8N1, n=**1** ⇒ 8N2, n=**2** ⇒ 8E1 n=**3** ⇒ 8E2, n=**4** ⇒ 8O1, n=**5** ⇒ 8O2 Preset on 2 ⇒ 8E1
CMWn	&|	Set receiving mode after RS485 transmission: n=**0** ⇒ Violate protocol and go in Rx mode right after Tx n=**1** ⇒ Respect protocol and wait 3.5 characters after Tx Preset on 1 ⇒ Respect the protocol

6. It is possible to check the settings of the parameters by sending the following command:

Command	Reply	Description
RMB	*b p w a*	Baud Rate: *b*=**0** ⇒ 9600, *b*=**1** ⇒ 19200 RS485 transmission mode: *p*=**0** ⇒ 8N1, *p*=**1** ⇒ 8N2, *p*=**2** ⇒ 8E1, *p*=**3** ⇒ 8E2, *p*=**4** ⇒ 8O1, *p*=**5** ⇒ 8O2 Read reception mode after RS485 transmission: *w*=**0** ⇒ violate protocol and go in Rx mode right after Tx *w*=**1** ⇒ respect protocol and wait 3.5 characters after Tx *a*= RS485 address

Note: the command CAL USER ON is not required for reading the settings.

MODBUS MODE

The probe enters RS485 MODBUS-RTU mode immediately after power on.

Reading the measurements

In MODBUS mode, it is possible to read the measured values by using the function code 04h (Read Input Registers). The following table shows the MODBUS Input Registers available:

MODBUS Input Registers

Register Number	Register Address	Datum	Format
1	0	Status register	16-bit integer
2	1	Volumetric water content in % VWC [x10]	16-bit integer
3	2	Apparent dielectric permittivity [x1000]	16-bit integer
4	3	Soil temperature in °C [x10]	16-bit integer
5	4	Soil temperature in °F [x10]	16-bit integer

STATUS REGISTER

The 16-bit status register gives the following information:

Bit	Description
0	If equal to 1, an error occurred
1	If equal to 1, data memory overflow
2	If equal to 1, data memory error
3	If equal to 1, program memory error
4…5	Always 0
6	If equal to 1, VWC measurement error
7	If equal to 1, temperature measurement error
8	If equal to 1, power cycle
9…14	Always 0
15	If equal to 1, probe not ready (invalid measures)

SDI-12 PROTOCOL

The probes with SDI-12 output are compliant with the version 1.3 of the protocol.

The communication parameters of the protocol are:

baud rate: 1200, data bits: 7, parity: Even, stop bits: 1

The communication with the probe is performed by sending a command in the following form:

<Address><Command>!

with <Address> = address of the probe the command is sent to
<Command> = type of operation requested to the probe

The probe reply is as follows:

<Address><Data><CR><LF>

with <Address> = address of the probe which replies
<Data> = information sent by the probe
<CR> = ASCII character *Carriage Return*
<LF> = ASCII character *Line Feed*

The probe comes with a factory address preset to 0. The address can be modified by using the proper SDI-12 command reported in the following table.

The following table reports the SDI-12 commands available. For consistency with the documentation of the SDI-12 standard, the probe address is indicated in the table with the letter **a**.

SDI-12 Commands

Command	Probe reply	Description
a!	a<CR><LF>	Verifies the presence of the probe.
aI!	allccccccccmmmmmmvvvssssssss<CR><LF> with: a = address of the probe (1 character) ll = SDI-12 compliant version (2 characters) cccccccc = manufacturer (8 characters) mmmmmm = probe model (6 characters) vvv = firmware version (3 characters) ssssssss = serial number (8 characters) ⇒ Example of response: 013DeltaOhmHD3910A0013201518 with: 0 = probe address 13 = SDI-12 version 1.3 compliant DeltaOhm = manufacturer's name HD3910 = probe model A00 = firmware version 13201518 = serial number	Requests for information from the probe.
aAb! Where: b = new address	b<CR><LF> Note: if the b character is not an acceptable address, the probe responds with a instead of b.	Modification of the probe address.
?!	a<CR><LF>	Request of the address of the probe. If more than one probe is connected to the bus, a conflict occurs.

Command	Probe reply	Description
Type M (start measurement) and type C (start concurrent measurement) commands		
VWC and temperature		
aM! **aC!**	atttn<CR><LF> with: ttt = number of seconds necessary for the instrument to make the measure available (3 characters) n = number of detected variables (1 character for aM!, 2 characters for aC!) Note: ttt = 000 means that datum is immediately available.	Request to execute the measurement.
aD0!	a+n+w…w+t…t<CR><LF> with: n = content of the status register w…w = volumetric water content (m^3/m^3) t…t = soil temperature in °C ⇒ Example of response: 0+0+0.325+17.6 probe address = 0 content of the status register = 0 volumetric water content = 0.325 (m^3/m^3) = 32.5% soil temperature = 17.6 °C	Reads the measurement.
Permittivity		
aM1! **aC1!**	atttn<CR><LF> with: ttt = number of seconds necessary for the instrument to make the measure available (3 characters) n = number of detected variables (1 character for aM1!, 2 characters for aC1!) Note: ttt = 000 means that datum is immediately available.	Request to execute the measurement.
aD0!	a+n+p…p<CR><LF> with: n = content of the status register p…p = apparent dielectric permittivity ⇒ Example of response: 0+0+0.029 probe address = 0 content of the status register = 0 apparent dielectric permittivity = 0.029	Reads the measurement.
Signal level and temperature		
aM2! **aC2!**	atttn<CR><LF> with: ttt = number of seconds necessary for the instrument to make the measure available (3 characters) n = number of detected variables (1 character for aM2!, 2 characters for aC2!) Note: ttt = 000 means that datum is immediately available.	Request to execute the measurement.
aD0!	a+n+v…v+t…t<CR><LF> with: n = content of the status register v…v = signal internal level in V t…t = soil temperature in °C ⇒ Example of response: 0+0+0.095302+17.6 probe address = 0 content of the status register = 0 signal internal level = 0.095302 V soil temperature = 17.6 °C	Reads the measurement.

In addition to the above-mentioned commands, the probe also implements the corresponding

commands with CRC, that require to add a 3-character CRC code at the end of the reply before <CR><LF>. The format of these commands is obtained from the previous by adding the letter C: aMC!, aMC1!, aMC2!, aCC!, aCC1!, aCC2!. The probe does not implement the type R (Continuous Measurements) commands.

MAINTENANCE

The probe does not require any special maintenance. We recommend a periodic cleaning with water and normal detergent of the electrodes in order to avoid the accumulation of substances that may alter the measures.

ORDERING CODES

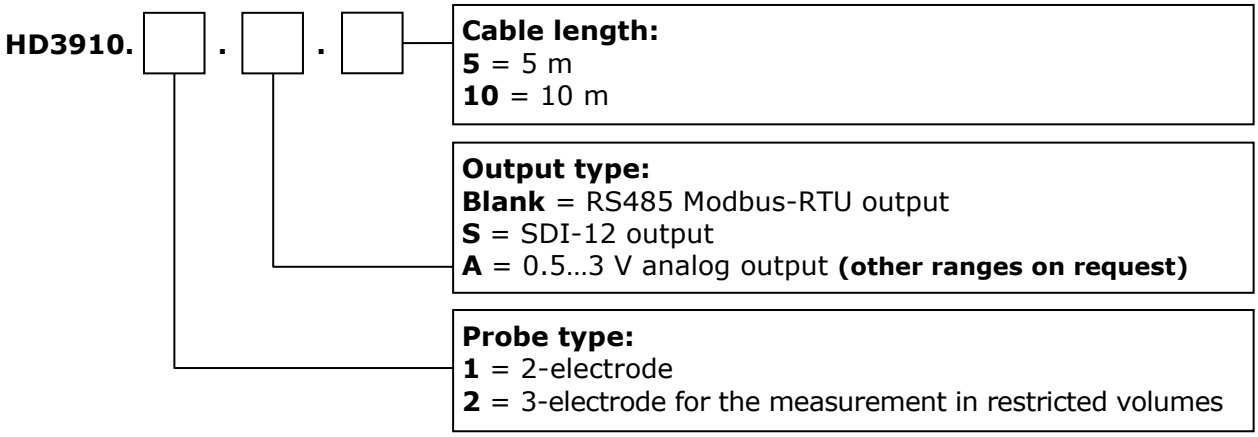

WARRANTY

The manufacturer is required to respond to the "factory warranty" only in those cases provided by Legislative Decree 6 September 2005 - n. 206. Each instrument is sold after rigorous inspections; if any manufacturing defect is found, it is necessary to contact the distributor where the instrument was purchased from. During the warranty period (24 months from the date of invoice) any manufacturing defects found will be repaired free of charge. Misuse, wear, neglect, lack or inefficient maintenance as well as theft and damage during transport are excluded. Warranty does not apply if changes, tampering or unauthorized repairs are made on the product. Solutions, probes, electrodes and microphones are not guaranteed as the improper use, even for a few minutes, may cause irreparable damages.
The manufacturer repairs the products that show defects of construction in accordance with the terms and conditions of warranty included in the manual of the product. For any dispute, the competent court is the Court of Padua. The Italian law and the "Convention on Contracts for the International Sales of Goods" apply.

TECHNICAL INFORMATION

The quality level of our instruments is the result of the continuous product development. This may lead to differences between the information reported in the manual and the instrument you have purchased.
We reserves the right to change technical specifications and dimensions to fit the product requirements without prior notice.

DISPOSAL INFORMATION

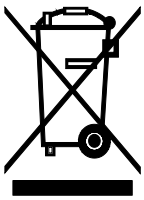

Electrical and electronic equipment marked with specific symbol in compliance with 2012/19/EU Directive must be disposed of separately from household waste. European users can hand them over to the dealer or to the manufacturer when purchasing a new electrical and electronic equipment, or to a WEEE collection point designated by local authorities. Illegal disposal is punished by law.

Disposing of electrical and electronic equipment separately from normal waste helps to preserve natural resources and allows materials to be recycled in an environmentally friendly way without risks to human health.

CE RoHS



Absolutely maintenance-free and extremely fast measurement of precipitation type (Rain, snow, sleet, freezing rain, hail) and intensity, thanks to radar measurement technology. The smart radar rain sensor & present weather detector!

- **Parameters measured**
  Rain/precipitation quantity, rain/precipitation type (Rain, snow, sleet, freezing rain, hail)

- **Measurement technology**
  24GHz Doppler radar

- **Product highlights**
  Very fast response time, maintenance-free measurement, present weather detection

- **Interfaces**
  RS-485 semi-duplex two-wire, SDI-12, pulse interface / UMB protocol, Modbus

- **Article number**
  8367.U03, 8367.U04, 8367.U05

The Lufft WS100 is our rain sensor with radar technology and adjustable heating. Using a 24-GHz Doppler radar, it measures the speed of all forms of condensed water. These include rain, freezing rain, hail, snow and sleet.
The low-energy sensor detects precipitation from the first drop. Its possible uses are nearly unlimited. Whether in hydrology and water management, agricultural and environmental science, building automation, meteorology or airport and traffic control: the rain gauge measures rain almost anywhere in the world.

General	
Dimensions	Ø150 mm (5.9 in), height: 190 mm (7.48 in)
Suitable mast diameter	60 - 76 mm
Weight	~0.6 kg

Electrical parameters	
Power supply	10...28 VDC
Power consumption without heating	1 VA / 0.4 VA (low power mode)
Heating power	9 VA

Operating parameters	
Operat. temp. range	-40...60 °C
Operat. humidity range	0...100 %
Protection class	IP66
Survival wind speed	75 m/s

Data transfer	
Interfaces/ protocols	RS-485 semi-duplex two-wire, SDI-12, pulse interface / UMB protocol, Modbus
(Pluggable) cable length	10 m
Transmission frequency	24 GHz

Precipitation	
Measurement surface	9 cm^2
Precipitation types	Rain, snow, sleet, freezing rain, hail, drizzle; No precipitation (SYNOP 4677)
Principle	Doppler radar
Accuracy	±0.16mm or ±10% of the measured value for liquid precipitation*
*)	Under laboratory conditions by means of Lufft test system: Reference drop simulator with 2.8 mm drop diameter and adjustable intensity between 10 and 200 mm/h.
Resolution liquid preciptiation	0.01 / 0 .1 / 0.2 / 0.5 / 1.0 mm (pulse interface)

Measurement ranges	
Droplet size	0.3...5.0 mm
Drop Size Distribution	11 drop size classes with bandwidth of 0.5 mm
Precipitation intensity	0.01...200 mm/h / 0...7.874 inch/h
Particle velocity	0.9...15.5 m/s
Solid precipitation	5.1...~30 mm

PCE Italia s.r.l.
Via Pesciatina 878 / B-Interno 6
55012 Gragnano (LUCCA)
Italia
Telefono: +39 0583 975 114
Fax: +39 0583 974 824
info@pce-italia.it
www.pce-instruments.com/italiano

Sensore di velocità del vento PCE-WS A

Sensore di velocità del vento di alta resistenza meccanica e grande flessibilità

Il sensore di velocità del vento compete nella qualità con i migliori sensori sul mercato, in plastica o metallo. Il segnale di uscita della tensione è proporzionale alla velocità del vento. I cuscinetti incorporati sono in acciaio inox di alta qualità. Costruito in plastica tecnica di alta qualità

Applicazioni

Il dispositivo è utile per qualsiasi applicazione in cui è necessario conoscere la velocità del vento: applicazioni sia industriali che domestiche, gru, pannelli solari, turbine eoliche, stazioni meteorologiche ... Può essere collegato ai nostri display, indicatori, PLC e altri sistemi, per visualizzare la velocità del vento e/o essere in grado di attivare allarmi preimpostati.

- Design industriale per ambienti ostili
- Uscita analogica 4-20 mA
- Cuscinetti in acciaio inox
- Basso consumo elettrico

Specifiche tecniche

Alimentazione	12 ... 30V DC
Intensità massima	<20 mA
Tipo di uscita	Analogica (4-20 mA 2 fili)
Impedenza di carico collegabile	$R_L < \frac{Vcc - 8V}{0,02\ A}\ \Omega$
Range di misura	3 ... 180 km/h
Velocità di avvio	8 km/h
Velocità massima	200 km/h
Precisione	1km/h (3-15 km/h) 3% (15-180 km/h)
Materiale	PA +FV
Cuscinetti	Acciaio inox X65Cr13
Peso (con cavo da 20m)	1425 g
Peso (senza cavo)	135 g
Temperatura di stoccaggio	-35 ... +80 ºC
Temperatura operativa senza ghiaccio	-20 .. +70 ºC
EMC	EN 61000-6-2:2001 EN 55022:2001, Classe B
Grado di protezione	IP65 (UNE 20324:1993)

Contenuto della spedizione

1 x Sensore di velocità del vento PCE-WS A con uscita analogica 4-20 mA,
1 x Cavo da 20 m a 2 fili,
Istruzioni per l'uso (Disponibili in Inglese, Italiano in traduzione)

Italiano



Istruzioni per l’uso

Serie PCE-WS | Anemometro

Le istruzioni per l’uso in varie lingue (italiano, inglese, francese, spagnolo, tedesco, portoghese, olandese, turco…) possono essere trovate usando la funzione cerca su: www.pce-instruments.com

Ultima modifica: 26. febbraio 2024
v1.0

PCE Instruments

Indice

1 Informazioni di sicurezza 1

2 Specifiche tecniche 2

3 Contenuto della spedizione 3

4 Dimensioni 4

5 PCE-WS V / PCE-WS A 5

5.1 Messa in scala del segnale di uscita 5

5.2 Connessione 6

6 PCE-WS CR 7

6.1 Connessione 8

7 PCE-WS RS485 8

7.1 Connessione 8

7.2 Protocollo di interfaccia 8

7.3 Lettura | Metodo 1 9

7.4 Lettura | Metodo 2 9

7.5 Scrittura 9

8 PCE-WS P 10

9 Garanzia 12

10 Smaltimento del dispositivo e delle batterie 12

1 Informazioni di sicurezza

Leggere attentamente e integralmente il presente manuale di istruzioni. L'uso del dispositivo è consentito solo a personale qualificato. I danni provocati dalla mancata osservanza delle presenti istruzioni ci esimono da qualsiasi responsabilità.

- Questo dispositivo deve essere utilizzato come descritto nel manuale d'istruzioni. In caso contrario si possono creare situazioni di pericolo.
- Utilizzare il dispositivo solo quando le condizioni ambientali (temperatura, umidità ...) si trovano entro i limiti indicati nelle specifiche. Non esporre il dispositivo a temperature elevate, alla luce diretta del sole e all'umidità.
- La struttura del dispositivo può essere aperta solo da personale di PCE Instruments.
- Non utilizzare il dispositivo con le mani bagnate.
- Non effettuare modifiche tecniche al dispositivo.
- Il dispositivo può essere pulito solo con un panno. Non usare prodotti detergenti abrasivi o solventi.
- Utilizzare con il dispositivo solo accessori forniti da PCE Instruments o equivalenti.
- Prima dell'uso, controllare che non vi siano danni visibili alla struttura. In tal caso, non utilizzare lo strumento.
- Non utilizzare il dispositivo in ambienti potenzialmente a rischio di esplosione.
- Non devono essere superati valori limite delle grandezze indicate nelle specifiche.
- Evitare il contatto con la polvere ed evitare forti campi elettromagnetici, spruzzi d'acqua, condensa e gas.
- La mancata osservanza delle presenti indicazioni possono provocare guasti al dispositivo e lesioni all'operatore.

Il presente manuale di istruzione è stato pubblicato da PCE Instruments senza nessun tipo di garanzia.
Per consultare le condizioni generali di garanzia, rimandiamo al capitolo dedicato ai nostri Termini e condizioni.
Per ulteriori informazioni, la preghiamo di rivolgersi a PCE Instruments.

2 Specifiche tecniche

PCE-WS A	
Uscita	4 … 20 mA
Impedenza massima collegabile	$R_L < \frac{V_{CC} - 8V}{0.02\ A}\ \Omega$
Protezione	IP 65
Alimentazione	12 … 30 V DC
Impedenza massima	<20 mA
Tipo di connessione	3 x 0,75 mm²
PCE-WS V	
Uscita	0 … 10 V
Impedenza di uscita	4k6 Ω
Protezione	IP 65
Alimentazione	15 … 24 V DC
Intensità massima	<2,5 W
Tipo di connessione	3 x 0,75 mm²
PCE-WS P	
Uscita	Frequenza (impulsi)
Tipo di contatto	Reed
Protezione	IP 65
Alimentazione	3 … 24 V DC
Intensità massima	24 mA
Tipo di connessione	4 x 0,65 mm²
PCE-WS CR	
Uscita	Contatto relè (NA libero da tensione)
Tipo di contatto	8 A / 250 V AC
Protezione	IP 54
Alimentazione	12 … 24 V DC
Consumo massimo	<1 W
Tipo di connessione	4 x 0,75 mm²
PCE-WS RS485	
Uscita	RS-485
Intensità massima di uscita	100 mA
Protezione	IP 65
Alimentazione	9 … 30 V DC
Intensità massima	100 mA
Tipo di connessione	4 x 0,65 mm²

Altre specifiche	
Range di misura	3 … 180 km/h
velocità di partenza	8 km/h
Velocità massima	200 km/h
Precisione	1 km/h Range di 3 … 15 km/h 3 % Range di 15 … 180 km/h
Materiale	PA + FV
Cuscinetti	Acciaio inox X65Cr13
Temperatura operativa	-20 … +70 ºC (senza ghiaccio)
Temperatura di stoccaggio	-35 … +80 ºC
Dimensioni	125 x 139 mm
Lunghezza del cavo di collegamento	20 m (salvo versione RS485: 25 m)

3 Contenuto della spedizione

1 x Anemometro PCE-WS con 20 m di cavo (versione RS-485: 25 m)
1 x Manuale di istruzioni

4 Dimensioni

Vista da sopra:

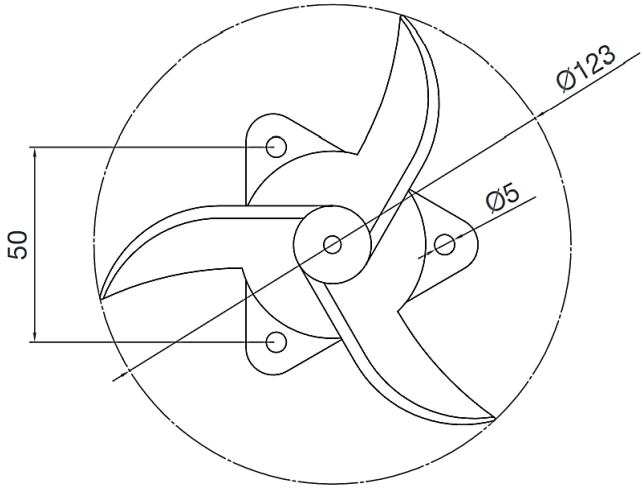

Vista da sotto:

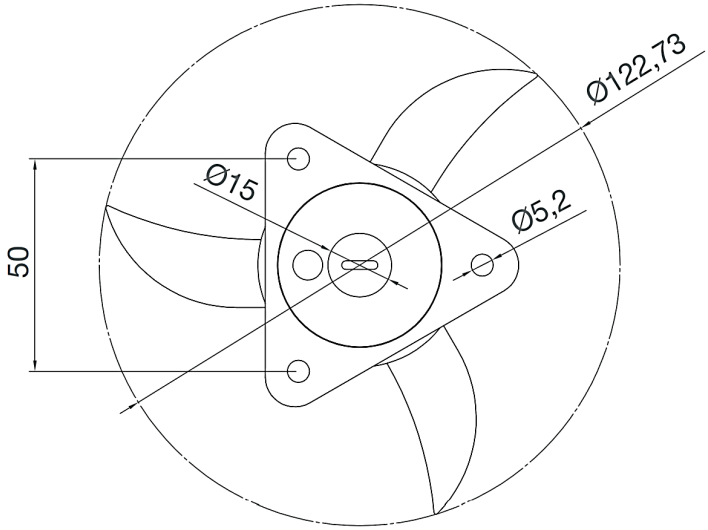

Vista laterale:

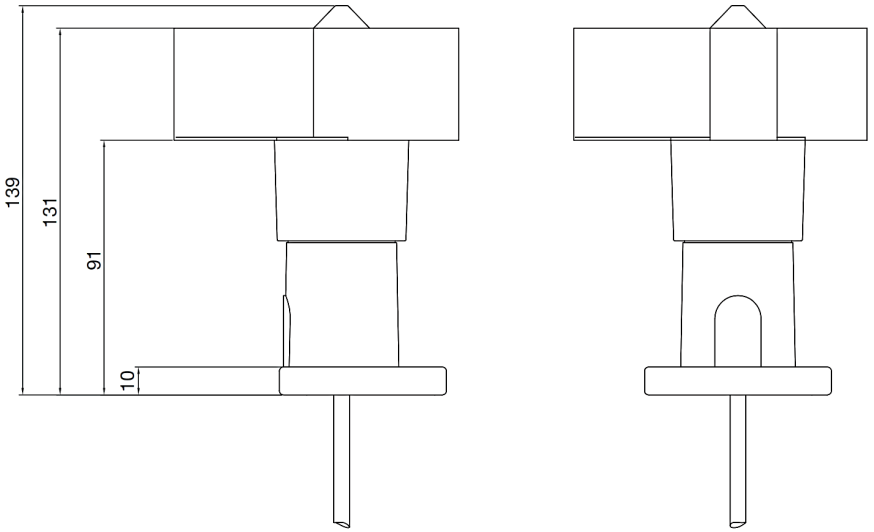

5 PCE-WS V / PCE-WS A

5.1 Messa in scala del segnale di uscita

Il segnale di uscita è un segnale analogico 0 ... 10 V o 4 ... 20 mA a seconda della versione. Le uscite sono lineari e sono strutturate nel modo seguente:

0 ... 10 V = 0 ... 180 km/h

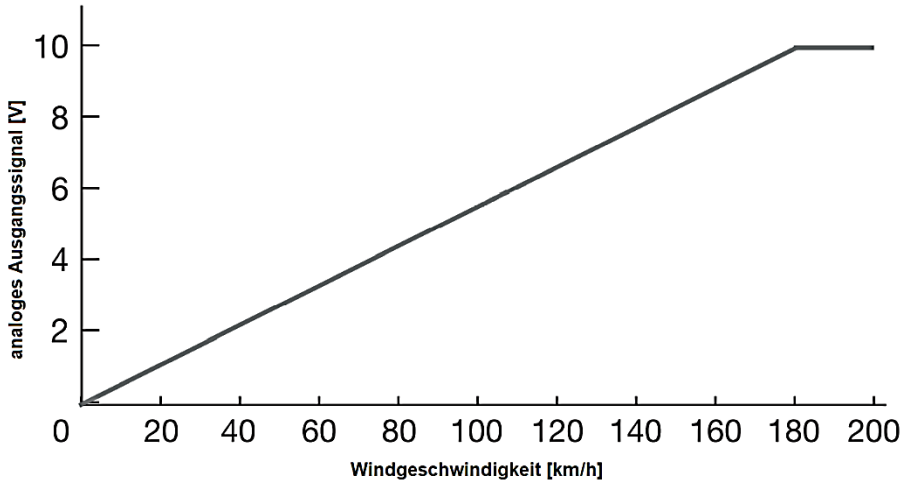

4 ... 20 mA = 0 ... 180 km/h

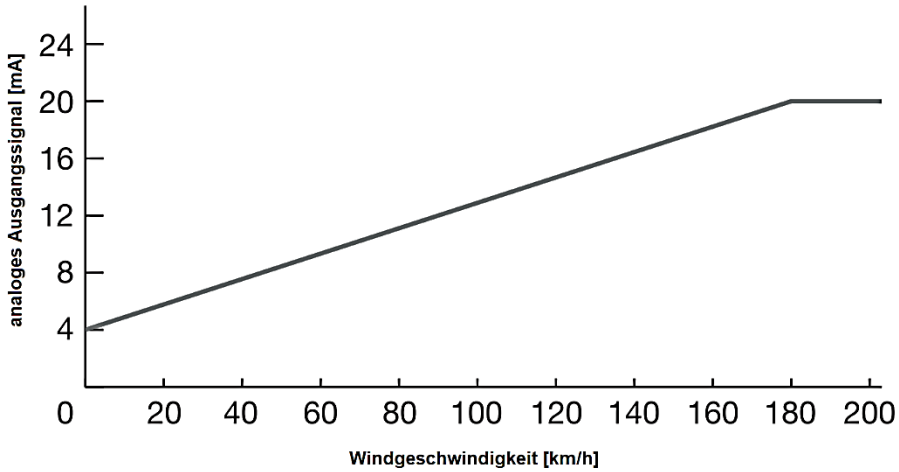

5.2 Connessione

Il sensore per il segnale analogico 4 ... 20 mA viene collegato a un'unità di valutazione come segue:

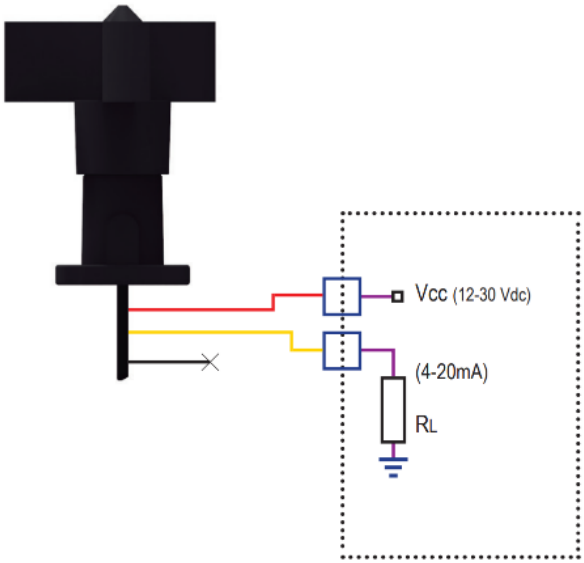

Il sensore per il segnale analogico 0 ... 10 V viene collegato a una unità di valutazione nel modo che segue:

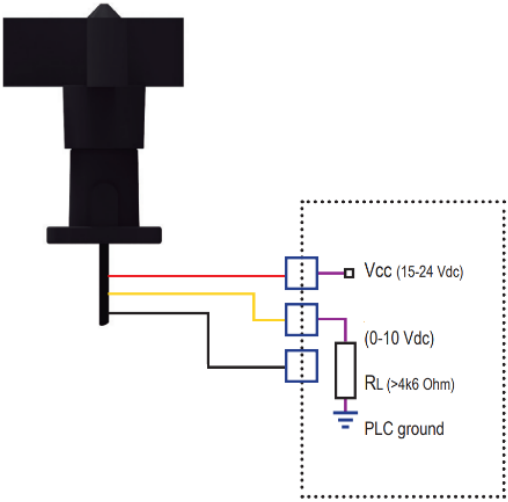

6 PCE-WS CR

Il PCE-WS CR ha un'uscita a relè regolabile tramite un selettore rotativo posto in basso, dietro il coperchio filettato. Il relè si attiva 1 secondo dopo il superamento della soglia del valore limite impostato. Se la velocità del vento è inferiore di 1 km/h alla soglia limite, il relè viene di nuovo disinserito. Il tempo minimo di uscita è di 5 secondi. È possibile impostare i seguenti valori limite:

Configurazione	Velocità
0	20 km/h
1	25 km/h
2	30 km/h
3	35 km/h
4	40 km/h
5	45 km/h
6	50 km/h
7	55 km/h
8	60 km/h
9	65 km/h
A	70 km/h
B	75 km/h
C	80 km/h
D	85 km/h
E	90 km/h
F	95 km/h

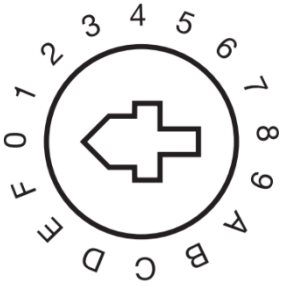

6.1 Connessione

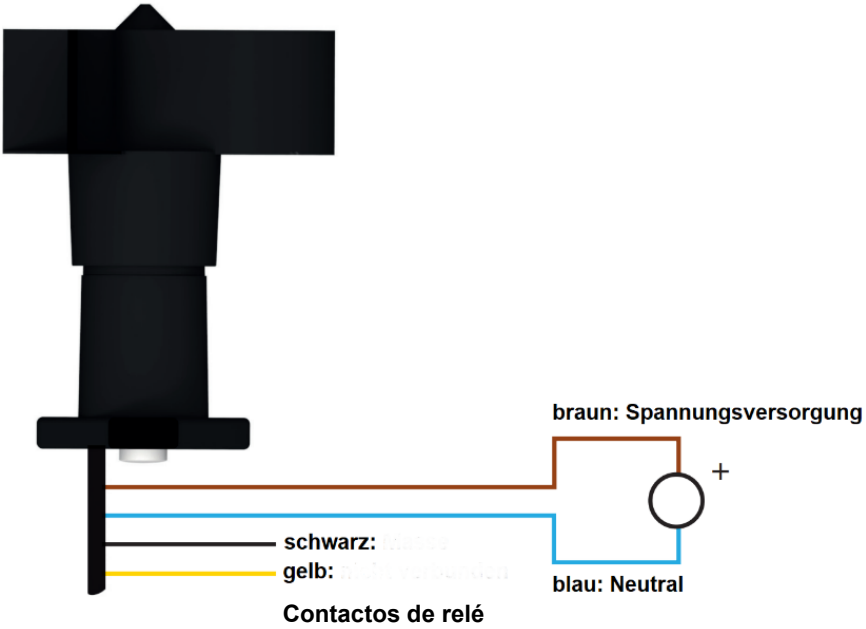

7 PCE-WS RS485

Il PCE-WS RS485 trasmette i valori di misura direttamente tramite un segnale RS-485. La resistenza di uscita è già inclusa nel sensore ed è di 120 Ω.

7.1 Connessione

Connessione	Colore
Alimentazione	Blu
Massa	Bianco
RS485 A	Arancione
RS485 B	Giallo

7.2 Protocollo di interfaccia

Tipo di protocollo: Modbus RTU
Formato file: 1 bit di start, 8 bit di dati e 1 bit di stop
Velocità di trasmissione: 19200 baud
Parità: Pari

Addr	04	00	00	00	01	CRCH	CRCL

La velocità del vento in km/h è memorizzata in 2 registri: @30001 e @40001. L'utente può leggere questo valore utilizzando una qualsiasi delle 2 funzioni disponibili (Read Input Register e Read Holding Register).
L'indirizzo di default del PCE-WS RS485 è 244 <=> 0xF4
Questo valore è memorizzato in Holding Register @40002 e può essere modificato dall'utente. L'utente può impostare qualsiasi indirizzo nel range 1 (0x01) a 255 (0xFF).

7.3 Lettura | Metodo 1

Richiesta di lettura della velocità del vento da master mediante *Read Input Register* (funzione 0x04)

03	04	00	00	00	01	30	28

Risposta di slave (PCE-WS RS485 Modbus RTU)

03	04	02	SH	SL	CRCH	CRCL

SHSL: Il valore della velocità del vento in km/h.

Esempio di risposta di slave per 100 km/h (0x0064)

03	04	02	00	64	C1	1B

7.4 Lettura | Metodo 2

Richiesta di lettura della velocità del vento da maestro con *Read Holding Register* (funzione 0x03)

03	03	00	00	00	01	85	E8

Risposta di slave (PCE-WS RS485 Modbus RTU)

03	03	02	SH	SL	CRCH	CRCL

SHSL: Il valore della velocità del vento in km/h.

Esempio di risposta di slave per 100 km/h (0x0064)

03	03	02	00	64	C0	6F

7.5 Scrittura

Richiesta di scrittura di Address mediante *Write Single Register* (funzione 0x06):

03	06	00	01	00	NEW_ADDR	CRCH	CRCL

Nota: L'indirizzo del dispositivo (Addr) si memorizza in Holding Register @40002

Risposta di slave (PCE-WS RS485 Modbus RTU)

03	06	00	01	00	NEW_ADDR	CRCH	CRCL

NEW_ADDR Il nuovo indirizzo che avrà il dispositivo. Sono i valori tra 1 (0x01) to 255 (0xFF).

Esempio para NEW_ADDR 0x02

Richiesta di scrittura

03	06	00	01	00	02	58	29

Risposta di slave

03	06	00	01	00	02	58	29

NOTA: L'indirizzo dello slave passa al nuovo valore immediatamente dopo il messaggio di risposta.

8 PCE-WS P

Il modello PCE-WS P ha un contatto reed che emette la velocità del vento secondo quanto segue funzione:

Velocità del vento (km/h) = 0,8*Hz +3

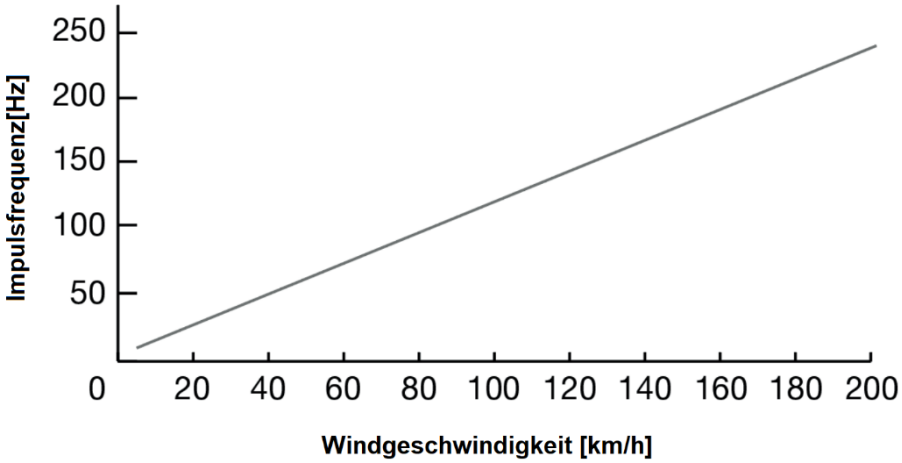

Connessione

Il cablaggio interno del sensore per il vento è il seguente.

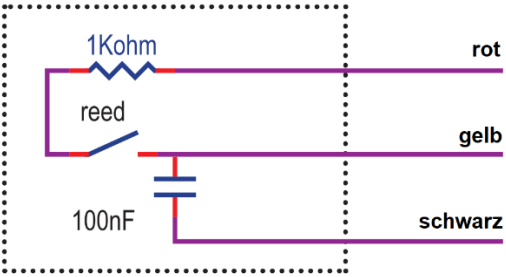

Esistono diverse opzioni di connessione per mettere in funzione il sensore.
Collegamento a due fili per il collegamento diretto a uno schermo

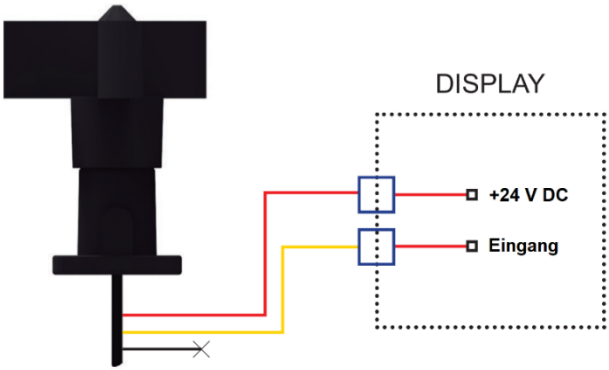

Connessione a tre fili per collegamento diretto a un PLC, per esempio

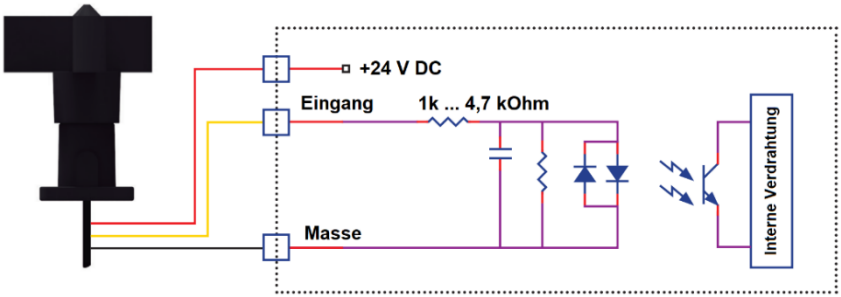

9 Garanzia

Le nostre condizioni di garanzia le può trovare a questo indirizzo:
https://www.pce-instruments.com/italiano/stampa.

10 Smaltimento del dispositivo e delle batterie

Per lo smaltimento delle batterie nell'UE si applica la direttiva 2006/66/CE del Parlamento europeo. A causa delle sostanze inquinanti contenute, le batterie non devono essere smaltite come rifiuti domestici. Devono essere conferite ai centri di raccolta previsti a tale scopo.
Al fine di rispettare la direttiva 2012/19/UE, ritiriamo i nostri dispositivi. Li riutilizziamo o li consegniamo a un'azienda di riciclaggio che li smaltisce in conformità alla legge.
Per i Paesi al di fuori dell'UE, le batterie e i dispositivi devono essere smaltiti in conformità alle normative locali sui rifiuti.
Per qualsiasi domanda, contattare PCE Instruments.

RAEE-Reg.-Nr.DE69278128





ATTENZIONE: "Questo strumento non dispone di protezione ATEX, per cui non deve essere usato in ambienti potenzialmente a rischio di esplosione (polvere, gas infiammabili)."

Le specifiche possono essere soggette a modifiche senza preavviso.

Contatti PCE Instruments

Germania
PCE Deutschland GmbH
Im Langel 4
D-59872 Meschede
Deutschland
Tel.: +49 (0) 2903 976 99 0
Fax: +49 (0) 2903 976 99 29
info@pce-instruments.com
www.pce-instruments.com/deutsch

Francia
PCE Instruments France EURL
23, rue de Strasbourg
67250 Soultz-Sous-Forets
France
Téléphone: +33 (0) 972 3537 17
Numéro de fax: +33 (0) 972 3537 18
info@pce-france.fr
www.pce-instruments.com/french

Spagna
PCE Ibérica S.L.
Calle Mayor, 53
02500 Tobarra (Albacete)
España
Tel. : +34 967 543 548
Fax: +34 967 543 542
info@pce-iberica.es
www.pce-instruments.com/espanol

Regno Unito
PCE Instruments UK Ltd
Unit 11 Southpoint Business Park
Ensign Way, Southampton
Hampshire
United Kingdom, SO31 4RF
Tel: +44 (0) 2380 98703 0
Fax: +44 (0) 2380 98703 9
info@pce-instruments.co.uk
www.pce-instruments.com/english

Italia
PCE Italia s.r.l.
Via Pesciatina 878 / B-Interno 6
55012
Capannori (LU)
Italia
Telefono: +39 0583 975 114
Fax: +39 0583 974 824
info@pce-italia.it
www.pce-instruments.com/italiano

Turchia
PCE Teknik Cihazları Ltd.Şti.
Halkalı Merkez Mah.
Pehlivan Sok. No.6/C
34303 Küçükçekmece - İstanbul
Türkiye
Tel: 0212 471 11 47
Faks: 0212 705 53 93
info@pce-cihazlari.com.tr
www.pce-instruments.com/turkish

Paesi Bassi
PCE Brookhuis B.V.
Institutenweg 15
7521 PH Enschede
Nederland
Telefoon: +31 (0)53 737 01 92
info@pcebenelux.nl
www.pce-instruments.com/dutch

Stati Uniti
PCE Americas Inc.
1201 Jupiter Park Drive, Suite 8
Jupiter / Palm Beach
33458 FL
USA
Tel: +1 (561) 320-9162
Fax: +1 (561) 320-9176
info@pce-americas.com

Danimarca
PCE Instruments Denmark ApS
Brik Centepark 40
7400 Herning
Denmark

SR05 SERIES

Spectrally flat Class C (Second class) pyranometers with various outputs

SR05 series is the most affordable range of pyranometers meeting ISO 9060 requirements. They are ideal for general solar radiation measurements in (agro-)meteorological networks and PV monitoring systems. SR05's are easy to mount and install. Various outputs are available, both digital and analogue, for ease of integration.



Figure 1 *SR05 with ball levelling and tube mount.*



Figure 2 *Easy levelling of SR05 on its tube mount with ball levelling. SR05 series offers various industry standard digital and analogue outputs.*

Introduction

SR05 series is an economical range of ISO 9060 class C pyranometers for measurement of solar radiation received by a plane surface, in W/m^2, from a 180 ° field of view angle. Different configurations are available, depending on its mounting and the output needed. The combination of easy installation and its cost makes SR05 ideal for installation in (agro-) meteorology networks and PV power plant monitoring.

Benefits

- industry standard digital and analogue outputs: easy implementation and servicing
- easy mounting and levelling
- pricing: Class C pyranometers finally affordable for large networks

Suggested use

- general solar radiation measurements
- (agro-)meteorological networks
- PV power plant monitoring

Copyright by Hukseflux. Version 2301. We reserve the right to change specifications without prior notice

SR05 series design

SR05 pyranometers employ a thermopile sensor with black coated surface, one dome and an anodised aluminium body with visible bubble level. Optionally the sensor has a unique ball levelling mechanism and tube mount, for easy installation. SR05 has a variety of industry standard outputs, both digital and analogue: SR05-D1A3 offers Modbus over RS-485 and 0-1 V output, SR05-D2A2 offers Modbus over TTL and 4-20 mA current loop output. Version SR05-A1 offers a conventional analogue millivolt output.



Figure 3 *'Exploded view' of SR05. The optional ball levelling and tube mount allow for easy installation. The cable (standard 3 m) has an M12-A connector.*

Standards

Applicable instrument classification standards are ISO 9060 and WMO-No. 8.



SR05 series specifications

Measurand	hemispherical solar radiation
ISO classification	
ISO 9060:2018	spectrally flat Class C pyranometer
ISO 9060:1990	second class pyranometer
WMO performance level	moderate quality pyranometer
Calibration uncertainty	< 2.4 % (k = 2)
Calibration traceability	to WRR
Spectral range	285 to 3000 x 10^{-9} m
Rated operating temperature range	-40 to +80 °C
Standard cable length	3 m
Rated operating voltage range	
-versions -D1A3 and -D2A2	5 to 30 VDC
-version -A1	passive sensor
Levelling	ball levelling, optional with / without tube mount

Output

Version SR05-D1A3	
Communication protocol	Modbus
Hardware interface	2-wire (half duplex) RS 485
Digital output	-irradiance in W/m^2 -instrument body temperature in °C
Analogue output	0-1 V
Version SR05-D2A2	
Communication protocol	Modbus
Hardware interface	TTL
Digital output	same as SR05 D1A3
Analogue output	4-20 mA current loop
Version SR05-A1	
Analogue output	millivolt
Sensitivity (nominal)	10 x 10^{-6} V/(W/m^2)

Versions

SR05 series offers various versions with industry standard outputs, both digital and analogue, each with several options:

- SR05-D1A3 digital Class C pyranometer, with Modbus over RS-485 and 0-1 V output
- SR05-D2A2 digital Class C pyranometer, with Modbus over TTL and 4-20 mA output
- SR05-A1 analogue Class C pyranometer with millivolt output

Options

- cable lengths: 10, 20 m
- extension cable with connector pair: 10, 20 m
- with ball levelling
- with ball levelling and tube mount (for tube diameters 25 – 40 mm)
- OEM versions

Copyright by Hukseflux. Version 2301. We reserve the right to change specifications without prior notice

Table 1 *Ordering codes for SR05*

VERSIONS OF SR05 (part numbers), without cable	
SR05-D1A3	digital Class C pyranometer, with Modbus over RS-485 and 0-1 V output
SR05-D2A2	digital Class C pyranometer, with Modbus over TTL and 4-20 mA output
SR05-A1	analogue Class C pyranometer, with millivolt output
CABLE FOR SR05, with female M12-A connector at sensor end, non-stripped on other end	
'-03' after SR05 part number	standard cable length: 3 m
'-10' after SR05 part number	cable length: 10 m
'-20' after SR05 part number	cable length: 20 m
CABLE EXTENSION FOR SR05, with male and female M12-A connectors	
C06E-10	cable length: 10 m
C06E-20	cable length: 20 m
LEVELLING OPTIONS FOR SR05	
BL01	ball levelling, for levelling of SR05
TMBL01	tube mount with ball levelling, for mounting SR05 on a tube



SR05



SR05 with BL01



SR05 with TMBL01

See also

- PMF01 pyranometer mounting fixture, compatible with SR05 ball levelling
- view our complete range of pyranometers

About Hukseflux

Hukseflux is the leading expert in measurement of energy transfer. We design and manufacture sensors and measuring systems that support the energy transition. We are market leaders in solar radiation- and heat flux measurement. Customers are served through the main office in the Netherlands, and locally owned representations in the USA, Brazil, India, China, Southeast Asia and Japan.

Are you interested in this product?
E-mail us at: info@hukseflux.com

Copyright by Hukseflux. Version 2301. We reserve the right to change specifications without prior notice

Hukseflux
Thermal Sensors

USER MANUAL

SR05-D1A3 & **SR05-D2A2**

Digital second class pyranometers with various outputs



Copyright by Hukseflux | manual v2303 | www.hukseflux.com | info@hukseflux.com

Warning statements



Putting more than 30 Volt across the sensor wiring of the main power supply can lead to permanent damage to the sensor.



For proper instrument grounding: use SR05 with its original factory-made SR05 cable. See chapter on grounding and use of the shield.



Using the same Modbus address for more than one device will lead to irregular behaviour of the entire network.



Your data request may need an offset of +1 for each SR05 register number, depending on processing by the network master. Consult the manual of the device acting as the local master.

Modbus® is a registered trademark of Schneider Electric, licensed to the Modbus Organization, Inc.

Hukseflux
Thermal Sensors

Contents

Warning statements		**2**
Contents		**3**
List of symbols		**5**
Introduction		**6**
1	**Ordering and checking at delivery**	**10**
1.1	Ordering SR05	10
1.2	Included items	11
1.3	Quick instrument check	12
2	**Instrument principle and theory**	**13**
3	**Specifications of SR05 series**	**16**
3.1	Specifications of SR05-D1A3 and SR05-D2A2	16
3.2	Dimensions of SR05	20
4	**Standards and recommended practices for use**	**21**
4.1	Classification standard	21
4.2	General use for solar radiation measurement	21
4.3	General use for sunshine duration measurement	21
4.4	Specific use for outdoor PV system performance testing	22
4.5	Specific use in meteorology and climatology	23
5	**Installation of SR05**	**24**
5.1	Site selection and installation	24
5.2	Mounting and levelling SR05	25
5.3	Installing SR05	25
5.4	Installing SR05 with its ball levelling and tube mount	26
5.5	Electrical connection of SR05 series: wiring diagram	30
5.6	Grounding and use of the shield	31
5.7	Using SR05-D1A3's analogue 0 to 1 V output	32
5.8	Using SR05-D2A2's analogue 4 to 20 mA output	33
5.9	Using SR05-D1A3's and SR05-D2A2's digital output	35
5.10	Connecting SR05-D1A3 to an RS-485 network	35
5.11	Connecting SR05-D2A2 to a TTL device	37
5.12	Connecting SR05 to a PC	38
6	**Communication with SR05**	**40**
6.1	PC communication: Sensor Manager software	40
6.2	Network communication: function codes, registers, coils	45
6.3	Network communication: getting started	52
6.4	Network communication: example master request to SR05	53
7	**Making a dependable measurement**	**55**
7.1	The concept of dependability	55
7.2	Reliability of the measurement	56
7.3	Speed of repair and maintenance	57
7.4	Uncertainty evaluation	57
8	**Maintenance and trouble shooting**	**60**
8.1	Recommended maintenance and quality assurance	60
8.2	Trouble shooting	61
8.3	Calibration and checks in the field	62
8.4	Data quality assurance	63
9	**Appendices**	**64**
9.1	Appendix on cable extension / replacement	64
9.2	Appendix on tools for SR05	66

9.3 Appendix on spare parts for SR05 66
9.4 Appendix on standards for classification and calibration 67
9.5 Appendix on calibration hierarchy 68
9.6 Appendix on meteorological radiation quantities 69
9.7 Appendix on ISO and WMO classification tables 70
9.8 Appendix on definition of pyranometer specifications 71
9.9 Appendix on terminology / glossary 72
9.10 Appendix on floating point format conversion 73
9.11 Appendix on function codes, register and coil overview 74
9.12 Appendix on finding the sensor model name in the register 78
9.13 EU declaration of conformity 79

Hukseflux
Thermal Sensors

List of symbols

Quantities	**Symbol**	**Unit**
Voltage output	U	V
Sensitivity	S	V/(W/m^2)
Solar irradiance	E	W/m^2
Output of 0-1 V	U	V
Transmitted range of 0-1 V	r	W/m^2
Output of 4-20 mA current loop	I	A
Resistance	R	Ω
Transmitted range of 4-20 mA	r	W/m^2

(see also appendix 9.6 on meteorological quantities)

Subscripts

Not applicable

Introduction

SR05 series is the most affordable range of pyranometers meeting ISO 9060 second class requirements. They are ideal for general solar radiation measurements in (agro-) meteorological networks and PV monitoring systems. SR05's are easy to mount and install. Various outputs are available, both digital and analogue, for ease of integration.

SR05 pyranometer measures solar radiation received by a plane surface, in W/m^2, from a 180 ° field of view angle. Different configurations are available, depending on its mounting and the output needed.

SR05 employs a thermopile sensor with black coated surface, one dome and an anodised aluminium body with visible bubble level. SR05 has a variety of industry standard outputs, both digital and analogue:

- Version SR05-D1A3: digital sensor with Modbus over RS-485 and analogue 0-1 V output
- Version SR05-D2A2: digital sensor with Modbus over TTL and analogue 4–20 mA output
- Version SR05-A1: analogue sensor with analogue millivolt output

and

- Version SR05-D1A3-PV: digital with Modbus over RS-485, alternative for PV reference cell

This user manual covers use of two digital sensors in the SR05 series range: SR05-D1A3 and SR05-D2A2. Specifications of these versions differ from those of the digital SR05-D1A3-PV version and of the analogue version of model SR05: SR05-A1. For SR05-D1A3-PV or SR05-A1 use, consult the separate SR05-D1A3-PV or SR05-A1 user manual.

Benefits of the digital SR05 series:

- Industry standard digital outputs: easy implementation and servicing
- Easy mounting and levelling
- Pricing: second class pyranometers finally affordable for large networks



Figure 0.1 *SR05 digital second class pyranometer seen from above*

Optionally the sensor has a unique ball levelling mechanism with or without tube mount, for easy installation.



Figure 0.2 *On the left SR05 digital second class pyranometer with bubble level and M12-A cable connector in its standard configuration (3 metre cable standard included); on the right SR05 with optional ball levelling, for easy mounting and levelling on (non-)horizontal surfaces (included mounting bolts not displayed)*



Figure 0.3 *SR05 digital second class pyranometer with optional ball levelling and tube mount for easy mounting and levelling on a tube (tube not included)*

For communication between a PC and SR05-D1A3 and/or SR05-D2A2, the Hukseflux Sensor Manager software is downloadable. It allows the user to plot and export data, and change the SR05 Modbus address and its communication settings.

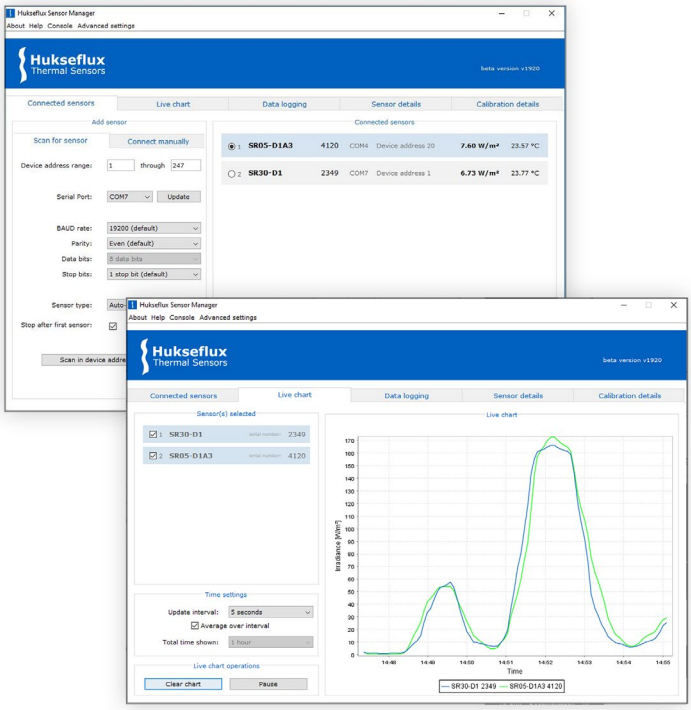

Figure 0.4 *User interface of the Sensor Manager*

SR05-D1A3 is suited for use in SCADA (Supervisory Control And Data Acquisition) systems, supporting Modbus RTU (Remote Terminal Unit) protocol over RS-485. In these networks the sensor operates as a slave. Using SR05-D1A3 in a network is easy. Once it has the correct Modbus address and communication settings and is connected to a power supply, the instrument can be used in RS-485 networks. A typical network will request the irradiance (registers 2 + 3) and temperature data (register 6) every 1 second, and eventually store the averages every 60 seconds. How to issue a request, process the register content and convert it to useful data is described in the paragraphs about network communication. The user should have sound knowledge of the Modbus communication protocol when installing sensors in a network. When using the analogue 0 to 1 V output provided by SR05-D1A3, the instrument can be connected directly to commonly used datalogging systems capable of handling a 0 to 1 V signal.

Version SR05-D1A3-PV, also with digital Modbus over RS-485 and 0-1 V output, is available as a perfect alternative for PV reference cells. Please see SR05-D1A3-PV's separate brochure and user manual.

When using SR05-D2A2's digital output, it can be connected to TTL devices via Modbus over TTL, or when using SR05-D2A2's analogue 4 to 20 mA output, to commonly used datalogging systems capable of handling a 4 to 20 mA current loop signal.

All SR05 versions should be used in accordance with the recommended practices of ISO, WMO and ASTM.

Suggested use for SR05:

- general solar radiation measurements
- (agro-)meteorological networks
- PV power plant monitoring

The recommended calibration interval of pyranometers is 2 years. The registers containing the applied sensitivity and the calibration history of the digital versions of SR05 are accessible for users with a password. This allows the user to choose his own local calibration service. The same register access may also be used for remotely controlled re-calibration of pyranometers in the field. Ask Hukseflux for information on this feature and on ISO and ASTM standardised procedures for field calibration.

The ASTM E2848 "Standard Test Method for Reporting Photovoltaic Non-Concentrator System Performance" (issued end 2011) confirms that a pyranometer is the preferred instrument for PV system performance monitoring. SR05 pyranometer complies with the requirements of this standard. For more information, see our pyranometer selection guide.

WMO has approved the "pyranometric method" to calculate sunshine duration from pyranometer measurements in WMO-No. 8, Guide to Meteorological Instruments and Methods of Observation. This implies that SR05 may be used, in combination with appropriate software, to estimate sunshine duration. This is much more cost-effective than using a dedicated sunshine duration sensor. Ask for our application note.

1 Ordering and checking at delivery

1.1 Ordering SR05

There are two standard configurations for the digital model SR05, each with several options:

- SR05-D1A3 (formerly known as SR05-DA1):
  with Modbus over RS-485 and 0-1 V output. standard cable length: 3 metres
- SR05-D2A2 (formerly known as SR05-DA2):
  with Modbus over TTL and 4-20 mA current loop output. standard cable length: 3 metres

Common options are:

- longer cable (10, 20 metres). Specify total cable length
- extension cable with connector pair (10, 20 metres). Specify total cable length
- ball levelling
- tube mount with ball levelling (for tube diameters 25 to 40 mm)

Ball levelling and tube mount are suited for retrofitting.

Table 1.1.1 *Ordering codes for the digital versions of model SR05*

VERSIONS OF SR05 (part numbers), without cable	
SR05-D1A3	digital second class pyranometer, with Modbus over RS-485 and 0-1 V output
SR05-D2A2	digital second class pyranometer, with Modbus over TTL and 4-20 mA output
CABLE FOR SR05, with female M12-A connector at sensor end, non-stripped on other end	
'-03' after SR05 part number	standard cable length: 3 m
'-10' after SR05 part number	cable length: 10 m
'-20' after SR05 part number	cable length: 20 m
LEVELLING OPTIONS FOR SR05	
BL01	ball levelling, for levelling of SR05
TMBL01	tube mount with ball levelling, for mounting SR05 on a tube
CABLE EXTENSION FOR SR05, with male and female M12-A connectors	
C06E-10	cable length: 10 m
C06E-20	cable length: 20 m

An extension cable (with connector pair) can be used in combination with a regular cable (with one connector at sensor end) to make alternative SR05 cable lengths possible.

Example: Cable length needed: 15 m. In this case, it is easiest to buy SR05 with a 20 m cable and to cut it to desired length.

Example: Cable length needed: 30 m. In this case, it is easiest to buy SR05 with 10 m cable and a cable extension of 20 m.

1.2 Included items

Arriving at the customer, the delivery should include:

- pyranometer SR05
- cable of the length as ordered
- product certificate matching the instrument serial number

Please store the certificate in a safe place.
The Hukseflux Sensor Manager can be downloaded via www.hukseflux.com/downloads

When ordering mounting options BL01 or TMBL01 with SR05, the delivery should also include:

- BL01:
  - ball levelling
  - 4 mm hex key
  - 1 x shim
  - 2 x M5x20 bolts
  - 2 x M5 nuts

- TMBL01:
  - ball levelling
  - 4 mm hex key
  - 1 x shim
  - 2 x M5x20 bolts
  - 2 x M5 nuts
  - tube mount
  - 2 x M5x30 bolts
  - 2 x M5x40 bolts



Figure 1.2.1 *From left to right: SR05, SR05 with mounting option BL01, and SR05 with tube mounting option TMBL01*
(nuts and bolts, tools and certificates are not shown, tube itself is not included)

1.3 Quick instrument check

A quick test of the instrument can be done by connecting it to a PC and installing the Sensor Manager software. See the chapters on installation and PC communication for directions.

1. At power–up the signal may have a temporary output level different from zero; an offset. Let this offset settle down.
2. Check if the sensor reacts to light: expose the sensor to a strong light source, for instance a 100 W light bulb at 0.1 m distance. The signal should read > 100 W/m^2 now. Darken the sensor either by putting something over it or switching off the light. The instrument irradiance output should go down and within one minute approach 0 W/m^2.
3. Inspect the bubble level.
4. Inspect the instrument for any damage.
5. Check the instrument serial number as indicated by the software against the label on the instrument and against the certificates provided with the instrument.

2 Instrument principle and theory

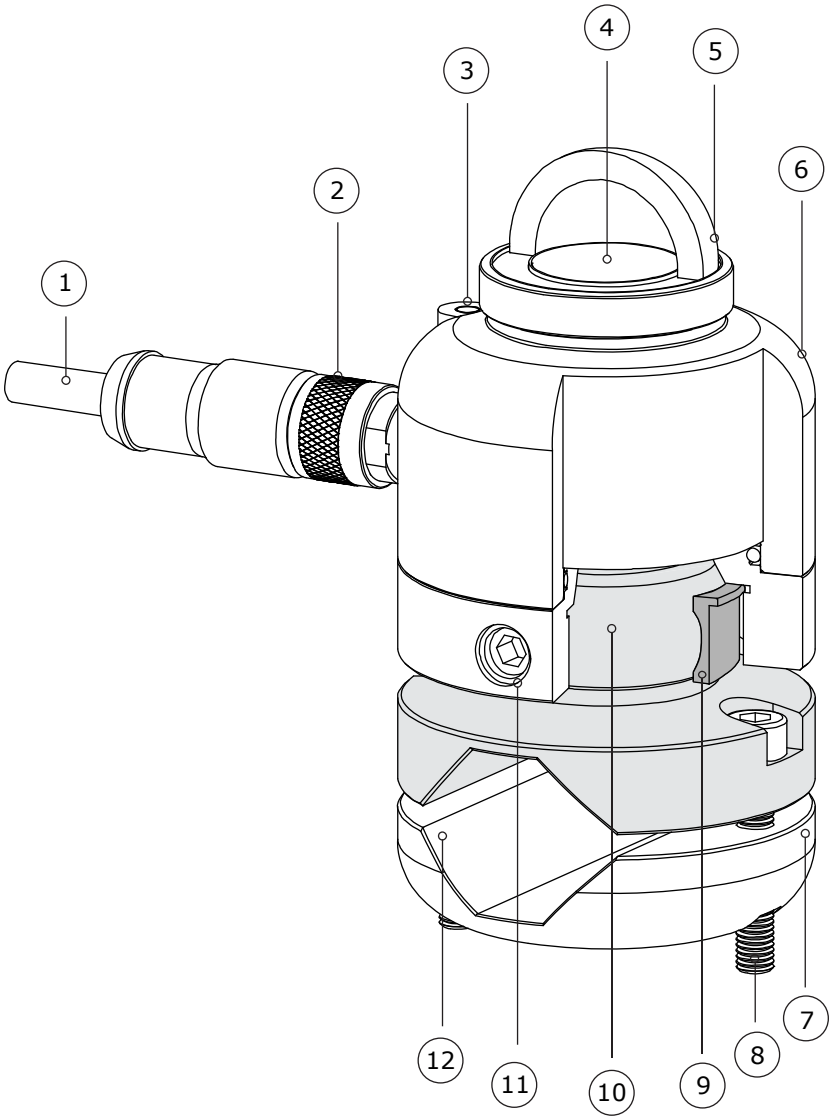

Figure 2.1 *Overview of SR05 (shaded areas in exploded view show ball levelling mount and shim). Numbers 7 to 12 are included when ordering option BL01 or TMBL01:*

(1) cable (standard length 3 metres, optional longer cable)
(2) connector
(3) bubble level
(4) thermal sensor with black coating
(5) glass dome
(6) sensor body
(7) tube mount (included with TMBL01)
(8) mounting screw (included with BL01 and TMBL01; requires 4 mm hex key)
(9) shim (included with BL01 and TMBL01; needed for ball levelling mount)
(10) ball levelling mount (included with BL01 and TMBL01l)
(11) countersunk set screw for levelling adjustment (included with BL01 and TMBL01; requires 4 mm hex key)
(12) opening for Ø 25 to Ø 40 mm tube when using ball levelling and tube mount

SR05's scientific name is pyranometer. A pyranometer measures the solar radiation received by a plane surface from a 180 ° field of view angle. This quantity, expressed in W/m^2, is called "hemispherical" solar radiation. The solar radiation spectrum extends roughly from 285 to 3000 x 10^{-9} m. By definition a pyranometer should cover that spectral range with a spectral selectivity that is as "flat" as possible.

In an irradiance measurement by definition the response to "beam" radiation varies with the cosine of the angle of incidence; i.e. it should have full response when the solar radiation hits the sensor perpendicularly (normal to the surface, sun at zenith, 0 ° angle of incidence), zero response when the sun is at the horizon (90 ° angle of incidence, 90 ° zenith angle), and 50 % of full response at 60 ° angle of incidence.
A pyranometer should have a so-called "directional response" (older documents mention "cosine response") that is as close as possible to the ideal cosine characteristic.

In order to attain the proper directional and spectral characteristics, a pyranometer's main components are:

- a thermal sensor with black coating. It has a flat spectrum covering the 200 to 50000 x 10^{-9} m range, and has a near-perfect directional response. The coating absorbs all solar radiation and, at the moment of absorption, converts it to heat. The heat flows through the sensor to the sensor body. The thermopile sensor generates a voltage output signal that is proportional to the solar irradiance.

- a glass dome. This dome limits the spectral range from 285 to 3000 x 10^{-9} m (cutting off the part above 3000 x 10^{-9} m), while preserving the 180 ° field of view angle. Another function of the dome is that it shields the thermopile sensor from the environment (convection, rain).

The digital versions of model SR05 have a high-end 24-bit A/D converter, which is used by SR05 to convert the analogue thermopile voltage to a digital signal.

Pyranometers can be manufactured to different specifications and with different levels of verification and characterisation during production. The ISO 9060 - 1990 standard, "Solar energy - specification and classification of instruments for measuring hemispherical solar and direct solar radiation", distinguishes between 3 classes; secondary standard (highest accuracy), first class (second highest accuracy) and second class (third highest accuracy).

From second class to first class and from first class to secondary standard, the achievable accuracy improves by a factor 2.

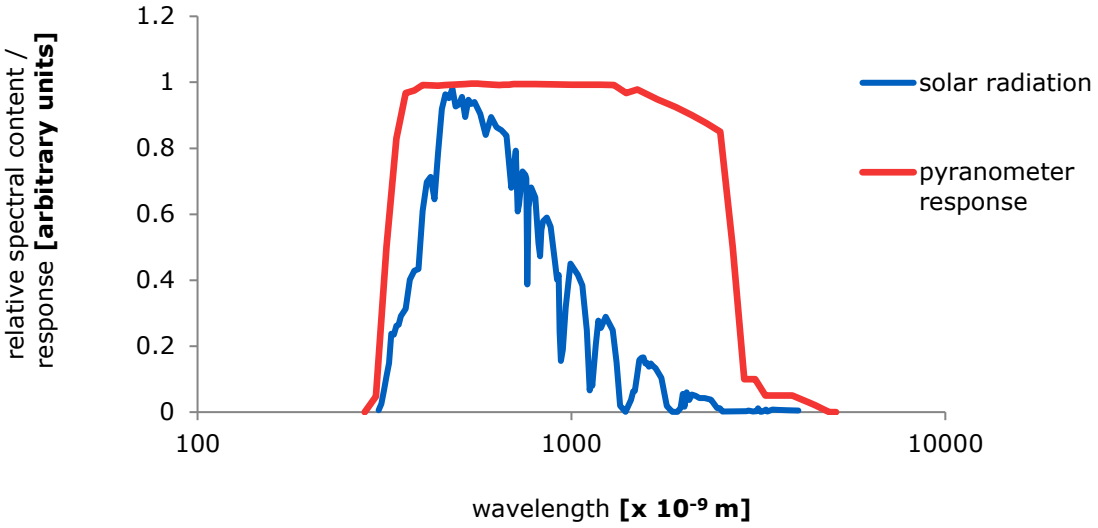

Figure 2.2 *Spectral response of the pyranometer compared to the solar spectrum. The pyranometer only cuts off a negligible part of the total solar spectrum.*

3 Specifications of SR05 series

3.1 Specifications of SR05-D1A3 and SR05-D2A2

SR05 measures the solar radiation received by a plane surface from a 180 ° field of view angle. This quantity, expressed in W/m^2, is called "hemispherical" solar radiation.

SR05-D1A3 offers irradiance in W/m^2 as a digital output and as a 0-1 V output. It must be used in combination with suitable power supply and a data acquisition system which uses the Modbus communication protocol over RS-485 or one that is capable of handling a 0-1 V signal.

SR05-D2A2 offers irradiance in W/m^2 as a digital output and as a 4-20 mA output. It must be used in combination with suitable power supply and a data acquisition system which uses the Modbus communication protocol over TTL or one that is capable of handling a 4-20 mA current loop signal.

This user manual covers use of two digital sensors in the SR05 series range: SR05-D1A3 and SR05-D2A2. Specifications of these versions differ from those of the digital SR05-D1A3-PV version and of the analogue version of model SR05: SR05-A1. For SR05-D1A3-PV or SR05-A1 use, consult the separate SR05-D1A3-PV or SR05-A1 user manual.

The instrument is classified according to ISO 9060 and should be used in accordance with the recommended practices of ISO, IEC, WMO and ASTM.

Table 3.1.1 *Specifications of SR05 series (continued on next pages)*

SR05 MEASUREMENT SPECIFICATIONS: LIST OF CLASSIFICATION CRITERIA OF ISO 9060*	
ISO classification (ISO 9060: 1990)	second class pyranometer
WMO performance level (WMO-No. 8, seventh edition 2008)	moderate quality pyranometer
Response time (95 %)	18 s
Zero offset a (response to 200 W/m^2 net thermal radiation)	< 15 W/m^2 unventilated
Zero offset b (response to 5 K/h change in ambient temperature)	< ± 4 W/m^2
Non-stability	< ± 1 % change per year
Non-linearity	< ± 1 % (100 to 1000 W/m^2)
Directional response	< ± 25 W/m^2
Spectral selectivity	< ± 5 % (0.35 to 1.5 x 10^{-6} m)
Temperature response	< ± 3 % (-10 to +40 °C)
Tilt response	< ± 2 % (0 to 90 ° at 1000 W/m^2)

*For the exact definition of pyranometer ISO 9060 specifications see the appendix.

Table 3.1.1 *Specifications of SR05 series (continued)*

SR05 SERIES ADDITIONAL SPECIFICATIONS	
Measurand	hemispherical solar radiation
Measurand in SI radiometry units	irradiance in W/m^2
Optional measurand	sunshine duration
Field of view angle	180 °
Output definition	running average over 4 last measurements, measurement interval 0.1 s, refreshed every 0.1 s
Recommended data request interval	1 s, storing 60 s averages
Measurement range	0 to 2000 W/m^2
Measurement function / optional programming for sunshine duration	programming according to WMO guide paragraph 8.2.2
Internal temperature sensor	MAX31725 Digital temperature sensor
Rated operating temperature range	-40 to +80 °C
Spectral range (20 % transmission points)	285 to 3000 x 10^{-9} m
Standard governing use of the instrument	ISO/TR 9901:1990 Solar energy -- Field pyranometers -- Recommended practice for use ASTM G183 - 05 Standard Practice for Field Use of Pyranometers, Pyrheliometers and UV Radiometers
Supply to housing isolation voltage	100 V
Standard cable length (see options)	3 m
Cable diameter	4.8 x 10^{-3} m
Chassis connector	M12-A straight male connector, male thread, 5-pole
Chassis connector type	M12-A
Cable connector	M12-A straight female connector, female thread, 5-pole
Cable connector type	M12-A
Connector protection class	IP67
Cable replacement	replacement and extension cables with connector(s) can be ordered separately from Hukseflux
Mounting (see options)	2 x M5 bolt at 46 mm centre-to-centre distance on north-south axis, requires 4 mm hex key
Levelling (see options)	bubble level is included
Levelling accuracy	< 0.6 ° bubble entirely in ring
Desiccant	silica gel, 1.0 g, in a HDPE bag, (25 x 45) mm
IP protection class	IP67
Gross weight	approx. 0.5 kg
Net weight	approx. 0.5 kg
CALIBRATION	
Calibration traceability	to WRR
Calibration hierarchy	from WRR through ISO 9846 and ISO 9847, applying a correction to reference conditions
Calibration method	indoor calibration according to ISO 9847, Type IIc
Calibration uncertainty	< 2.4 % (k = 2)
Recommended recalibration interval	2 years
Reference conditions	20 °C, normal incidence solar radiation, horizontal mounting, irradiance level 1000 W/m^2
Validity of calibration	based on experience the instrument sensitivity will not change during storage. During use under exposure to solar radiation the instrument "non-stability" specification is applicable.
Adjustment after re-calibration	via a PC, as *power user* with the Sensor Manager software. Request "power user" status at the factory for sensitivity adjustment and for writing the calibration history data.

Table 3.1.1 *Specifications of SR05 series (started on previous pages)*

HEATING	
Heater	no heating
MEASUREMENT ACCURACY AND RESOLUTION	
Uncertainty of the measurement	statements about the overall measurement uncertainty can only be made on an individual basis. see the chapter on uncertainty evaluation
WMO estimate on achievable accuracy for daily sums (see appendix for a definition of the measurement conditions)	10 %
WMO estimate on achievable accuracy for hourly sums (see appendix for a definition of the measurement conditions)	20 %
Irradiance resolution	0.2 W/m^2
Instrument body temperature resolution	3.9×10^{-3} °C
Instrument body temperature accuracy	± 0.5 °C
SR05-D1A3: DIGITAL	
Digital output	irradiance in W/m^2 instrument body temperature in °C
Rated operating voltage range	5 to 30 VDC
Recommended operating voltage	12 VDC
Power consumption	$< 75 \times 10^{-3}$ W at 12 VDC
Communication protocol	Modbus over 2-wire RS-485 half duplex
Transmission mode	Modbus RTU
System requirements for use with PC	Windows Vista and later, USB or RS-232 (COM) port and connector, RS-485 / USB converter or RS-485 / RS-232 converter
Software requirements for use with PC	Java Runtime Environment – software available free of charge at http://www.java.com
User interface on PC	Hukseflux Sensor Manager software downloadable: to download and for available software updates, please check http://www.hukseflux.com/page/downloads
SR05-D1A3: ANALOGUE 0 TO 1 V	
0 to 1 V output	irradiance in W/m^2
Transmitted range	0 to 1600 W/m^2
Output signal	0 to 1 V
Standard setting (see options)	0 V at 0 W/m^2 and 1 V at 1600 W/m^2
Rated operating voltage range	5 to 30 VDC
Recommended operating voltage	12 VDC
Power consumption	$< 75 \times 10^{-3}$ W at 12 VDC
SR05-D2A2: DIGITAL	
Digital output	irradiance in W/m^2 instrument body temperature in °C
Rated operating voltage range	5 to 30 VDC
Recommended operating voltage	12 VDC
Minimum operating voltage	10 VDC
Power consumption	$< 240 \times 10^{-3}$ W at 12 VDC
Maximum offset due to electronics	-7 W/m^2

Communication protocol	Modbus over TTL
Transmission mode	Modbus RTU
System requirements for use with PC	Windows Vista and later, USB or RS-232 (COM) port and connector, TTL / USB converter or TTL / RS-232 converter

Table 3.1.1 *Specifications of SR05 series (started on previous pages)*

Software requirements for use with PC	Java Runtime Environment – software available free of charge at http://www.java.com
User interface on PC	Hukseflux Sensor Manager software downloadable: to download and for available software updates, please check http://www.hukseflux.com/page/downloads
SR05-D2A2: ANALOGUE 4 TO 20 mA	
4 to 20 mA output	irradiance in W/m^2
Transmitted range	0 to 1600 W/m^2
Output signal	4 to 20 x 10^{-3} A
Standard setting (see options)	4 x 10^{-3} A at 0 W/m^2 and 20 x 10^{-3} A at 1600 W/m^2
Principle of 4 to 20 mA output	2-wire current loop
Rated operating voltage range	5 to 30 VDC
Recommended operating voltage	12 VDC
Minimum operating voltage	10 VDC
Power consumption	< 240 x 10^{-3} W at 12 VDC
Recommended shunt resistance	100 Ω
Maximum offset due to electronics	-7 W/m^2
OPTIONS	
Longer cable: 10,20 m Cable with M12-A female connector on sensor end, non-stripped on other end	option code = total cable length
Extension cable with connector pair: 10, 20 m. Cable with male and female M12-A connectors	option code = C06E-10 for 10 metres, C06E-20 for 20 metres
Ball levelling (BL01)	mountable on (non-)horizontal surfaces with angle compensation up to 10 °; retrofittable; one shim, two M5x20 mounting bolts and two M5 nuts included; requires 4 mm hex key for levelling and 4 mm hex key and 8 mm wrench for mounting
Tube mount with ball levelling (TMBL01)	mountable on tubes Ø 25 to Ø 40 mm with angle compensation up to 10 °; retrofittable; one shim, two M5x30 and two M5x40 mounting bolts included; requires 4 m hex key for levelling and mounting
Adapted transmitted range 0 to 1 V	can be adjusted at the factory upon request
Adapted transmitted range 4 to 20 mA	can be adjusted at the factory upon request

3.2 Dimensions of SR05

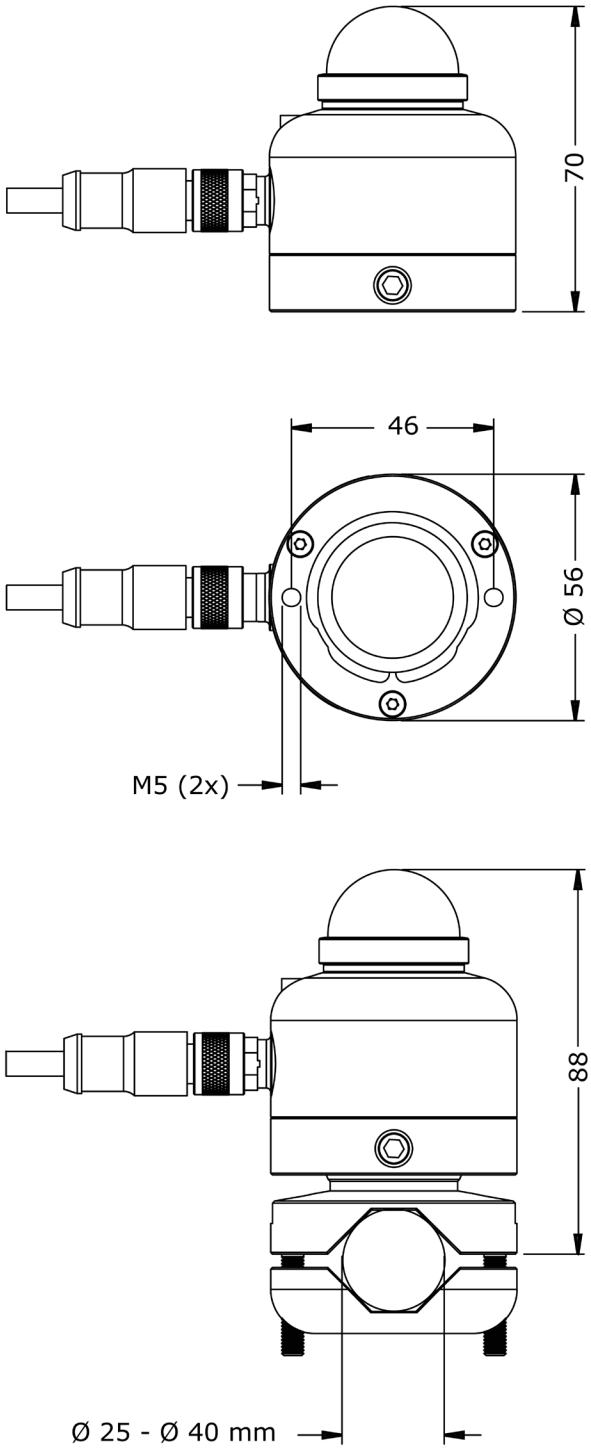

Figure 3.2.1 *Dimensions of SR05 in x 10^{-3} m. The bottom drawing shows the height of SR05 combined with its optional ball levelling mount and the tube diameter required for use with SR05's optional tube mount. M5 mounting bolts and the countersunk set screw require a 4 mm hex key for mounting and levelling.*

4 Standards and recommended practices for use

Pyranometers are classified according to the ISO 9060 standard and the WMO-No. 8 Guide. In any application the instrument should be used in accordance with the recommended practices of ISO, IEC, WMO and / or ASTM.

4.1 Classification standard

Table 4.1.1 *Standards for pyranometer classification. See the appendix for definitions of pyranometer specifications, and a table listing the specification limits.*

STANDARDS FOR INSTRUMENT CLASSIFICATION		
ISO STANDARD	EQUIVALENT ASTM STANDARD	WMO
ISO 9060:1990 Solar energy -- specification and classification of instruments for measuring hemispherical solar and direct solar radiation	Not available	WMO-No. 8; Guide to Meteorological Instruments and Methods of Observation, chapter 7, measurement of radiation, 7.3 measurement of global and diffuse solar radiation

4.2 General use for solar radiation measurement

Table 4.2.1 *Standards with recommendations for instrument use in solar radiation measurement*

STANDARDS FOR INSTRUMENT USE FOR HEMISPHERICAL SOLAR RADIATION		
ISO STANDARD	EQUIVALENT ASTM STANDARD	WMO
ISO/TR 9901:1990 Solar energy -- Field pyranometers -- Recommended practice for use	ASTM G183 - 05 Standard Practice for Field Use of Pyranometers, Pyrheliometers and UV Radiometers	WMO-No. 8; Guide to Meteorological Instruments and Methods of Observation, chapter 7, measurement of radiation, 7.3 measurement of global and diffuse solar radiation

4.3 General use for sunshine duration measurement

According to the World Meteorological Organization (WMO, 2003), sunshine duration during a given period is defined as the sum of that sub-period for which the direct solar irradiance exceeds 120 W/m^2.

WMO has approved the "pyranometric method" to estimate sunshine duration from pyranometer measurements (Chapter 8 of the WMO Guide to Instruments and Observation, 2008). This implies that a pyranometer may be used, in combination with appropriate software, to estimate sunshine duration. Ask for our application note.

Table 4.3.1 *Standards with recommendations for instrument use in sunshine duration measurement*

STANDARDS FOR INSTRUMENT USE FOR SUNSHINE DURATION
WMO
WMO-No. 8; Guide to Meteorological Instruments and Methods of Observation, chapter 8, measurement of sunshine duration, 8.2.2 Pyranometric Method

4.4 Specific use for outdoor PV system performance testing

Pyranometers are used for monitoring PV power plant efficiency, in order to measure incoming solar radiation independently from the PV system. Pyranometers can be placed in two positions:

- plane of array (POA), parallel to the PV panels, for measurement of the in-plane irradiance (also noted as G_i in IEC 61724-1)
- horizontally, for measurement of the global horizontal irradiance (E, also noted as GHI in IEC 61724-1)

SR05 series is applicable in outdoor PV system performance testing. See also Hukseflux model SR15-D1 and SR15-D2A2 digital first class pyranometers and SR05-D1A3-PV. The latter is an SR05 version offered as an alternative for monitoring with PV reference cells.

Table 4.4.1 *Standards with recommendations for instrument use in PV system performance testing*

STANDARDS ON PV SYSTEM PERFORMANCE TESTING	
IEC / ISO STANDARD	EQUIVALENT ASTM STANDARD
IEC 61724-1; Photovoltaic system performance monitoring – guidelines for measurement, data exchange and analysis COMMENT: Allows pyranometers or reference cells according to IEC 60904-2 and -6. Pyranometer reading required accuracy better than 5% of reading (Par 4.1) COMMENT: equals JISC 8906 (Japanese Industrial Standards Committee)	ASTM 2848-11; Standard Test Method for Reporting Photovoltaic Non-Concentrator System Performance COMMENT: confirms that a pyranometer is the preferred instrument for outdoor PV testing. Specifically recommends a "first class" pyranometer (paragraph A 1.2.1.)

4.5 Specific use in meteorology and climatology

The World Meteorological Organization (WMO) is a specialised agency of the United Nations. It is the UN system's authoritative voice on the state and behaviour of the earth's atmosphere and climate. WMO publishes WMO-No. 8; Guide to Meteorological Instruments and Methods of Observation, in which a table is included on "level of performance" of pyranometers. Nowadays WMO conforms itself to the ISO classification system.

5 Installation of SR05

5.1 Site selection and installation

Table 5.1.1 *Recommendations for installation of pyranometers*

Location	the situation that shadows are cast on the instruments is usually not desirable. The horizon should be as free from obstacles as possible. Ideally there should be no objects between the course of the sun and the instrument.
Mechanical mounting / thermal insulation	preferably use the ball levelling mount included with BL01 and TMBL01 to mount SR05 to a (non-) horizontal surface. A pyranometer is sensitive to thermal shocks. Do not mount the instrument on objects that become very hot (black coated metal plates).
Instrument mounting with 2 bolts	2 x M5 bolt at 46 mm centre-to-centre distance on north-south axis, connection through the sensor bottom in SR05's standard configuration. with BL01 ball levelling option: 2 x M5 bolt at 46 mm centre-to-centre distance, connection through ball levelling mount, M5x20 bolts and M5 nuts included. with TMBL01 ball levelling on tube mount option: 2 x M5 bolt at 46 mm centre-to-centre distance, connection through tube and ball levelling mount, M5x30 and M5x40 bolts included.
Performing a representative measurement	the pyranometer measures the solar radiation in the plane of the sensor. This may require installation in a tilted or inverted position. The black sensor surface (sensor bottom plate) should be mounted parallel to the plane of interest. In case a pyranometer is not mounted horizontally or in case the horizon is obstructed, the representativeness of the location becomes an important element of the measurement. See the chapter on uncertainty evaluation.
Levelling	in case of horizontal mounting use the bubble level and optionally the ball levelling mount. The bubble level is visible and can be inspected at all times.
Instrument orientation	by convention with the cable exit pointing to the nearest pole (so the cable exit should point north in the northern hemisphere, south in the southern hemisphere).
Installation height	in case of inverted installation, WMO recommends a distance of 1.5 m between soil surface and sensor (reducing the effect of shadows and in order to obtain good spatial averaging).

5.2 Mounting and levelling SR05

SR05 in its standard configuration is equipped with a visible bubble level and two mounting holes. For easy mounting and levelling on a (non-)horizontal surface, SR05's optional ball levelling, included with BL01 and TMBL01, is recommended. Ball levelling offers:

- easy levelling
- easy cable orientation
- easy instrument exchange
- easy mounting (mounting bolts and nuts included)

When installing SR05, ball levelling allows SR05 to rotate 360 ° and to tilt up to 10 °. This allows compensation for up to a ten degree angle when installing on a non-horizontal surface. A 4 mm hex key (un)locks the ball levelling mechanism. When using a tube or rod for installing SR05, the optional tube mount, included with TMBL01, is recommended. Combined with ball levelling it allows mounting to a 25 to 40 mm diameter tube with the same ease of levelling and instrument exchange.



Figure 5.2.1 *From left to right: SR05 in its standard configuration with 3 metre cable; with optional ball levelling for easy mounting and levelling on a (non-)horizontal surface; with optional ball levelling and tube mount for easy installation on a 25 to 40 mm diameter tube. Mounting bolts are included with the ball levelling and / or tube mount.*

5.3 Installing SR05

SR05 without ball levelling and tube mounting options can be mounted using two M5 bolts (not included). For the required screw lengths, 5 to 7 mm should be added to the thickness of the user's mounting platform. See the chapter on required tooling.

5.4 Installing SR05 with its ball levelling and tube mount

Two M5x20 bolts and two M5 nuts are included with SR05's BL01 (and TMBL01) ball levelling option. These screws are to be used to mount SR05 with its ball levelling to a (non-)horizontal surface when mounting SR05 with BL01.

Two M5x30 bolts and two M5x40 screws are included with SR05's TMBL01's tube mount with ball levelling option. These screws are to be used to clamp both ball levelling and tube mount to a 25 to 40 mm diameter tube. For tube diameters larger than or equal to 33 mm, use the M5x40 bolts instead of the M5x30 bolts for a secure fit.

The unique ball head mechanism of SR05's ball levelling mount is used to level SR05. When ordering ball levelling with SR05, it is delivered separately from SR05.

In case SR05 is not attached to its ball levelling mount yet, the user has to ensure a shim is placed properly in the centre of the bottom plate of SR05 before mounting and levelling. The shim allows smooth levelling and is shown top left in Figure 5.4.1. Follow steps 1 to 5 in Section 5.4.1 for placing the shim. Once a shim is in place, follow steps 6 to 9 in Section 5.4.2 to mount and level SR05 with its BL01 or TMBL01 ball levelling option. See Section 5.4.3 for removing the ball levelling mount and its shim.

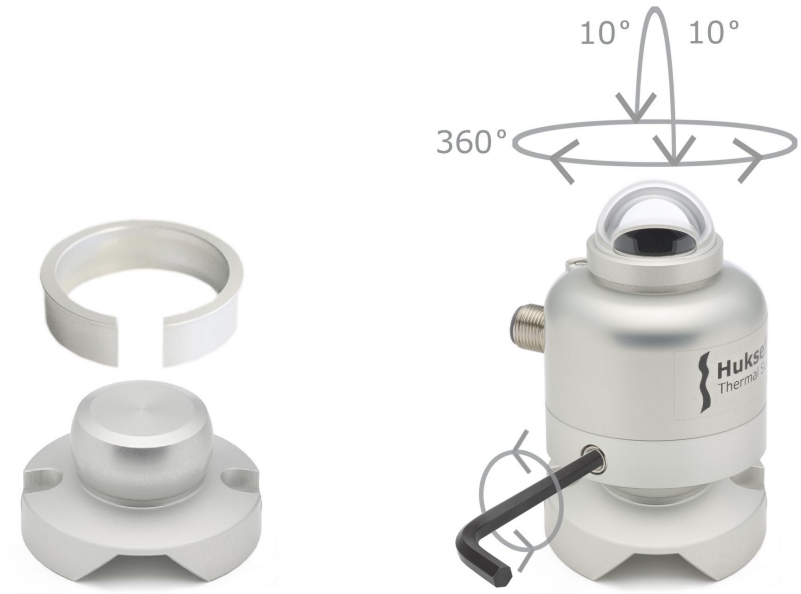

Figure 5.4.1 *On the left SR05's ball levelling including shim (mounting bolts not displayed) and on the right SR05 placed on the ball levelling mount. Loosen the countersunk set screw on SR05's side to unlock, allowing placement of the ball head and SR05 levelling, and tighten it to lock the ball head mechanism. A 4 mm hex key is the only tool needed to place and remove the ball levelling and to allow and disallow levelling adjustment. The shim, included when ordering ball levelling, allows for smooth levelling and should be positioned properly in the centre of the bottom plate of SR05.*

5.4.1 Placing SR05's ball levelling shim

When ordering SR05 pyranometer and its optional ball levelling or when exchanging a SR05 sensor on a ball levelling mount (retrofitting), the user has to ensure a dedicated shim is placed properly in the centre of the bottom plate of SR05. The aluminium shim ensures a secure fit between SR05 and ball levelling and allows the ball head to rotate smoothly for easy levelling. The shim, a loose set screw, a 4 mm hex key, two M5x20 mounting bolts and two M5 nuts are included when ordering the BL01 or TMBL01 ball levelling mount.

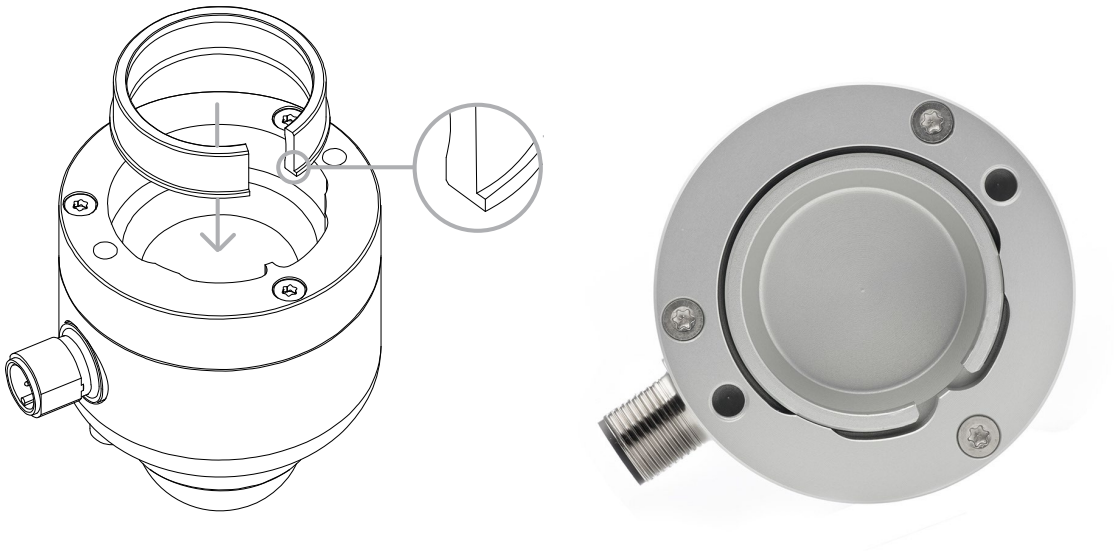

Figure 5.4.1.1 *Line drawing indicating placement of the aluminium shim and photo showing the shim properly positioned in the centre of SR05's bottom plate. Note the position of the protruding ledge when placing the shim.*

The shim can be placed into SR05's bottom plate following these steps:

1) If your SR05 has a small black plastic cover cap on the countersunk set screw opening on SR05's side, remove it. A small flathead screwdriver may be used. Then insert the loose set screw with a 4 mm hex key by turning the hex key clockwise until the screw is only slightly protruding (sticking out).
2) Hold SR05 in one hand, the shim in the other.
3) Ensure the orientation of the shim fits with that of SR05's bottom plate. Note the position of the protruding ledge (see Figure 5.5.1).
4) Pinch the shim slightly in order to reduce its diameter and to make it fit easily into SR05's bottom plate.
5) While pinching, push the shim into its position on SR05's bottom plate. The shim is placed.

Continue with the following section for mounting and levelling SR05 with ball levelling.

5.4.2 Mounting and levelling SR05 with BL01 or TMBL01

When the shim is properly in place (see steps 1 to 5), SR05 can be mounted and levelled using BL01 or TMBL01. Continue with the following steps:

6) Mount the ball levelling to a surface or platform with its M5 bolts and nuts. See chapter on tooling required.

7) SR05, with its shim positioned, can now be placed on the ball levelling mount. Gently push the sensor onto the ball head until it clicks.

8) The ball head can be rotated 360 ° and allows angle compensation on non-horizontal surfaces up to 10 °.

9) When SR05 is mounted and levelled, judging by its bubble level, lock the ball head mechanism by turning the set screw clockwise with a 4 mm hex key until it is tightened. The set screw should be countersunk and not protruding (not sticking out).

A similar approach is followed when levelling SR05 on its tube mount in the field:

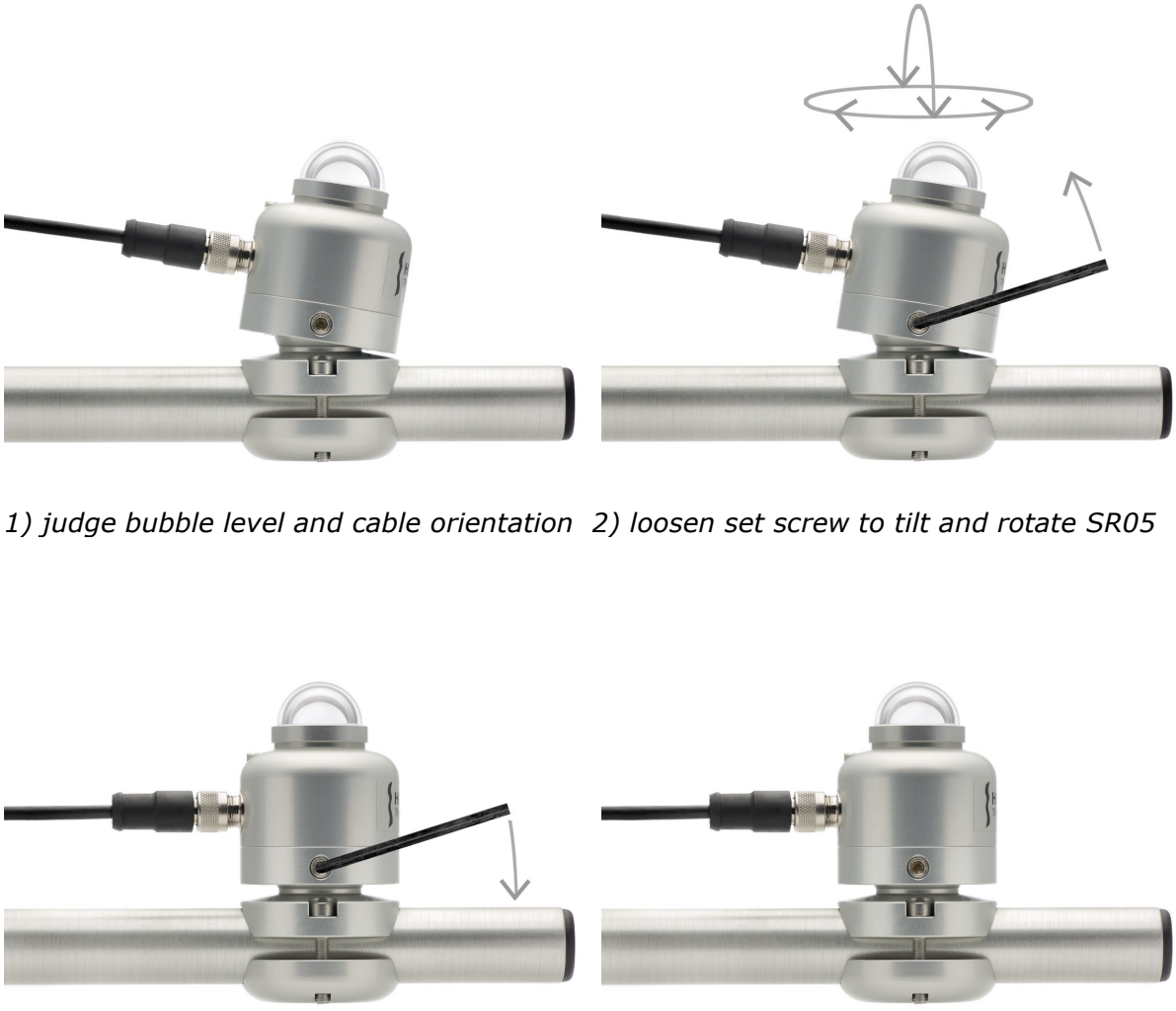

1) judge bubble level and cable orientation *2) loosen set screw to tilt and rotate SR05*

3) tighten set screw to lock ball levelling *4) SR05 is mounted and levelled*

Figure 5.4.2.1 *Levelling steps for SR05 when mounted on tube mount with ball levelling*

5.4.3 Removing the ball levelling mount and its shim

1) Loosen SR05's countersunk set screw with a 4 mm hex key by turning the hex key counter clockwise until the screw is slightly protruding (sticking out).
2) Hold SR05 in one hand, the ball levelling mount in the other.
3) Separate SR05 from the ball levelling mount by gently pulling out the ball levelling mount. Make sure the glass dome is protected at all times.

When (TM)BL01's ball head is not inserted in SR05, the shim makes a minor rattling noise when moving SR05. This is normal, caused by mechanical freedom between the two parts.

The shim can be removed from SR05's bottom plate by hand with the assistance of a small flathead screwdriver. See the chapter on tooling required. Let the screwdriver gently tip the shim out. When removing or placing the shim, make sure the glass dome is protected at all times.

5.5 Electrical connection of SR05 series: wiring diagram

The instrument must be powered by an external power supply, providing an operating voltage in the range from 5 to 30 VDC. SR05-D1A3 offers irradiance in W/m^2 as a digital output (Modbus over RS-485) and as an analogue 0 to 1 V output. SR05-D2A2 offers irradiance in W/m^2 as a digital output (Modbus over TTL) and as an analogue 4 to 20 mA output.

This user manual covers use of two digital sensors in the SR05 series range: SR05-D1A3 and SR05-D2A2. Specifications of these versions differ from those of the digital SR05-D1A3-PV version and of the analogue version of model SR05: SR05-A1. For SR05-D1A3-PV or SR05-A1 use, consult the separate SR05-D1A3-PV or SR05-A1 user manual.

Table 5.5.1 *Wiring diagram of SR05-D1A3*

PIN	WIRE	SR05-D1A3 Modbus over RS-485	SR05-D1A3 0 to 1 V output
1	Brown	VDC [+]	VDC [+]
4	Black	VDC [−]	VDC [−]
3	Blue	not connected	0 to 1 V output
2	White	RS-485 B / B' [+]	not connected
5	Grey	RS-485 A / A' [−]	not connected
	Yellow	shield	shield

Note 1: at the connector-end of the cable, the shield is connected to the connector housing
Note 2: it is not possible to use SR05-D1A3's digital and analogue outputs at the same time

Table 5.5.2 *Wiring diagram of SR05-D2A2*

PIN	WIRE	SR05-D2A2 Modbus over TTL	SR05-D2A2 4 to 20 mA output
1	Brown	VDC [+]	VDC [+]
4	Black	common	not connected
3	Blue	VDC [−]	4 to 20 mA output
2	White	TTL [Tx]	not connected
5	Grey	TTL [Rx]	not connected
	Yellow	shield	shield

Note 1: at the connector-end of the cable, the shield is connected to the connector housing
Note 2: it is not possible to use SR05-D2A2's digital and analogue outputs at the same time



With SR05-D2A2 over TTL, a potential difference exists between the VDC [-] (blue wire) and the common (black wire). This potential difference depends on the current drawn by the sensor. Care must be taken not to short circuit these wires. The TTL

[Tx] (white wire) and TTL [Rx] (grey wire) signals are referenced with respect to the common (black wire). If the TTL device to which SR05-D2A2 is connected requires external power, this power must be drawn from a separate power supply with a floating potential with respect to the power supply used by SR05-D2A2.

5.6 Grounding and use of the shield

Grounding and shield use are the responsibility of the user. The cable shield (called shield in the wiring diagram) is connected to the aluminium instrument body via the connector. In most situations, the instrument will be bolted on a mounting platform that is locally grounded. In these cases the shield at the cable end should not be connected at all. When a ground connection is not obtained through the instrument body, for instance in laboratory experiments, the shield should be connected to the local ground at the cable end. This is typically the ground or low voltage of the power supply or the common of the network. In exceptional cases, for instance when both the instrument and a datalogger are connected to a small size mast, the local ground at the mounting platform is the same as the network ground. In such cases ground connection may be made both to the instrument body and to the shield at the cable end.

5.7 Using SR05-D1A3's analogue 0 to 1 V output

SR05-D1A3 gives users the option to use 0 to 1 V output instead of its digital output. When using 0 to 1 V output, please read this chapter first. When opting solely for SR05-D1A3's digital output, please continue with the next chapter on SR05-D1A3: chapter 5.9.

Using the 0 to 1 V output provided by SR05-D1A3 is easy. The instrument can be connected directly to commonly used datalogging systems. The irradiance, E, in W/m^2 is calculated by measuring the SR05-D1A3 output, a voltage U, in V, and then multiplying by the transmitted range r. The transmitted range is provided with SR05-D1A3 on its product certificate. By convention 0 W/m^2 irradiance corresponds with 0 V transmitter output voltage. The transmitted range, which is the irradiance at output voltage of 1 V, and is typically 1600 W/m^2. The transmitted range can be adjusted at the factory upon request.

The central equation governing SR05-D1A3 is:

$$E = r \cdot U \qquad \text{(Formula 5.7.1)}$$

The standard setting is: E = 1600·U. See chapter 5.5 and the diagram below for electrical connections to voltmeters, when using SR05-D1A3's 0 to 1 V output.

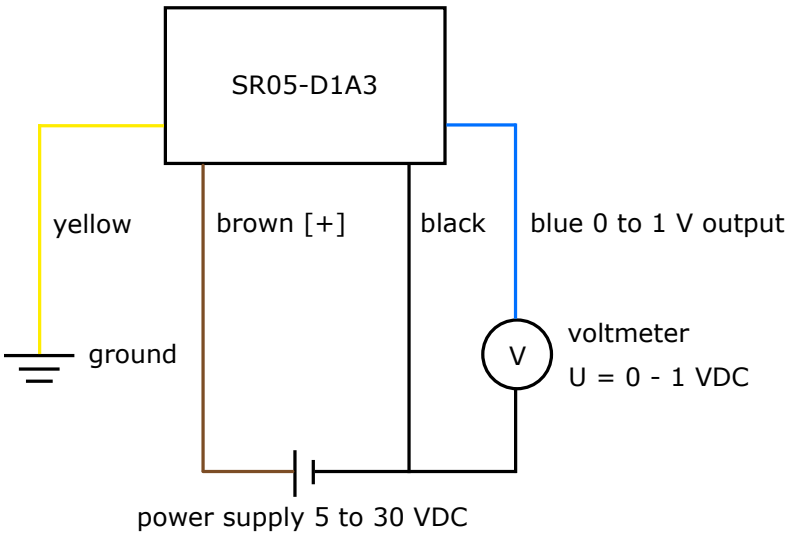

Figure 5.7.1 *Electrical diagram of the connection of SR05-D1A3 to a typical voltmeter or datalogger with the capacity to measure voltage signals. SR05-D1A3 operates on a supply voltage of 5 to 30 VDC.*

5.8 Using SR05-D2A2's analogue 4 to 20 mA output

SR05-D2A2 gives users the option to use 4 to 20 mA output instead of its digital output. When using 4 to 20 mA output, please read this chapter first. When opting solely for SR05-D2A2's digital output, please continue with the next chapter on SR05-D2A2: chapter 5.10.

Using the 4 to 20 mA output provided by SR05-D2A2 is easy. The instrument can be connected directly to commonly used datalogging systems. The irradiance, E, in W/m^2 is calculated by measuring the SR05-D2A2's output, a small current I, subtracting 4×10^{-3} A from it, and then multiplying by the transmitted range r. The transmitted range is provided with SR05-D2A2 on its product certificate. By convention 0 W/m^2 irradiance corresponds with 4×10^{-3} A transmitter output current I. The transmitted range, which is the irradiance at output current of 20×10^{-3} A, and is typically 1600 W/m^2. The transmitted range can be adjusted at the factory upon request.

The central equation governing SR05-D2A2 is:

$$E = r \cdot (I - 4 \times 10^{-3}) / (16 \times 10^{-3}) \qquad \text{(Formula 5.8.1)}$$

The standard setting is: $E = 1600 \cdot (I - 4 \times 10^{-3}) / (16 \times 10^{-3})$

To keep offsets resulting from heat dissipation by the electronics to a minimum, it is recommended to power the 4 to 20 mA current output from a 12 VDC power supply.

Table 5.8.1 *Requirements for data acquisition and amplification equipment*

Capability to - measure 4-20 mA or - measure currents or - measure voltages	SR05-D2A2 has a 4-20 mA output. There are several possibilities to handle this signal. It is important to realise that the signal wires not only act to transmit the signal but also act as power supply for the 4-20 mA current loop circuit. SR05-D2A2 operates on a supply voltage of 5 to 30 VDC. Some dataloggers have a 4-20 mA input. In that case SR05-D2A2 can be connected directly to the datalogger. Some dataloggers have the capability to measure currents. In some cases the datalogger accepts a voltage input. Usually a 100 Ω precision resistor is used to convert the current to a voltage (this will then be in the 0.4 – to 2 VDC range). This resistor must be put in series with the blue wire of the sensor. See next page and chapter 5.5 for electrical connections.

See chapter 5.5 and the diagrams below for electrical connections to am- and voltmeters, when using SR05-D2A2's 4 to 20 mA output.

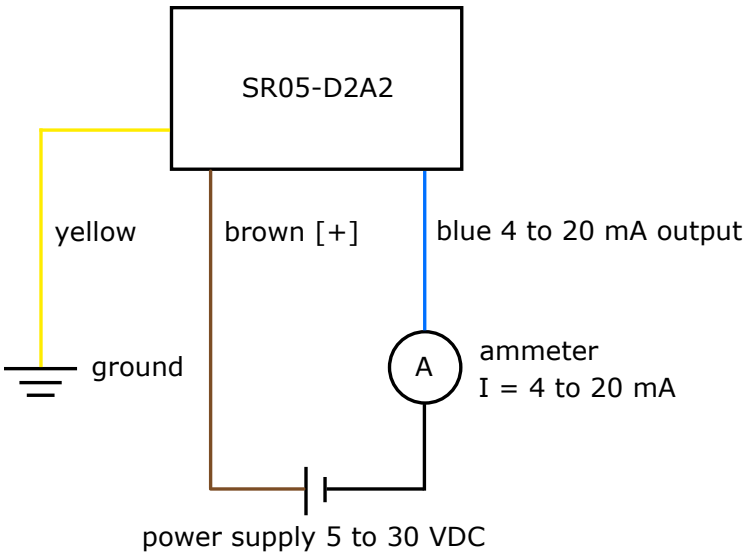

Figure 5.8.1 *Electrical diagram of the connection of SR05-D2A2 to a typical ammeter or datalogger with capacity to measure current signals. SR05-D2A2 operates on a supply voltage of 5 to 30 VDC.*

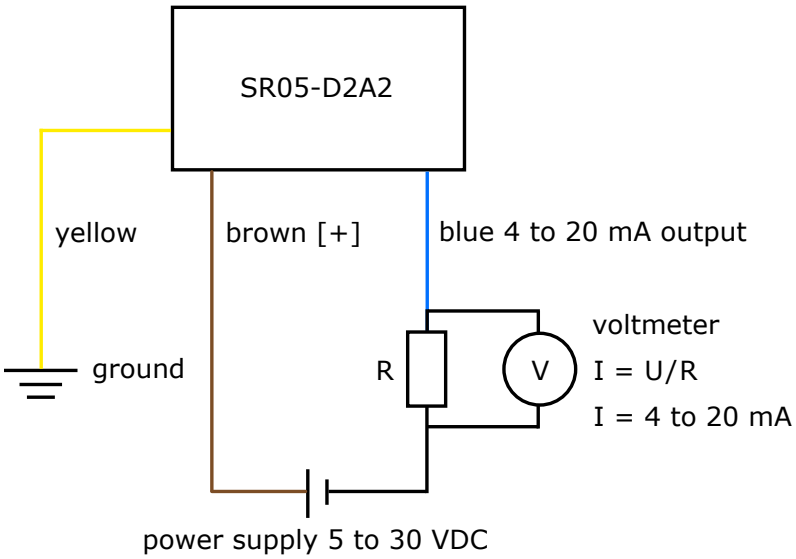

Figure 5.8.2 *Electrical diagram of the connection of SR05-D2A2 to a typical voltmeter or datalogger with the capacity to measure voltage signals. Usually a 100 Ω shunt resistor (R) is used to convert the current to a voltage. SR05-D2A2 operates on a supply voltage of 5 to 30 VDC.*

5.9 Using SR05-D1A3's and SR05-D2A2's digital output

When using SR05's digital output, SR05-D1A3 can be connected to an RS-485 network, whereas SR05-D2A2 can be connected to TTL devices. Both models can be connected to a PC for communication with the Sensor Manager software.

5.10 Connecting SR05-D1A3 to an RS-485 network

SR05-D1A3 is suited for a two-wire (half-duplex) RS-485 network. In such a network SR05-D1A3 acts as a slave, receiving data requests from the master. An example of the topology of an RS-485 two-wire network is shown in the figure below. SR05-D1A3 is powered from 5 to 30 VDC. The power supply is not shown in the figure. The VDC [-] power supply ground must be connected to the common line of the network.

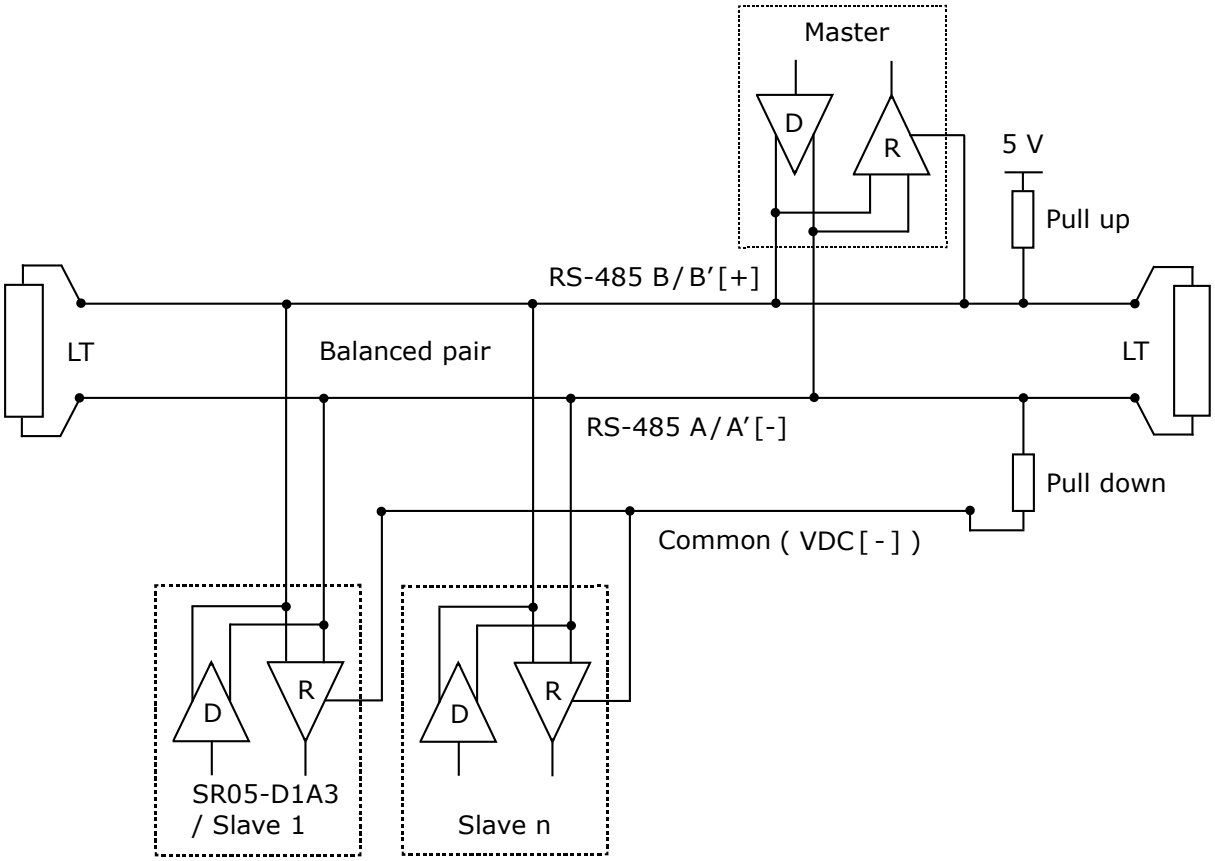

Figure 5.10.1 *Typical topology of a two-wire RS-485 network, figure adapted from: Modbus over serial line specification and implementation guide V1.02 (www.modbus.org). The power supply is not shown in this figure.*

After the last nodes in the network, on both sides, line termination resistors (LT) are required to eliminate reflections in the network. According to the EIA/TIA-485 standard, these LT have a typical value of 120 to 150 Ω. Never place more than two LT on the network and never place the LT on a derivation cable. To minimise noise on the network when no transmission is occurring, a pull up and pull down resistor are required. Typical values for both resistors are in the range from 650 to 850 Ω.

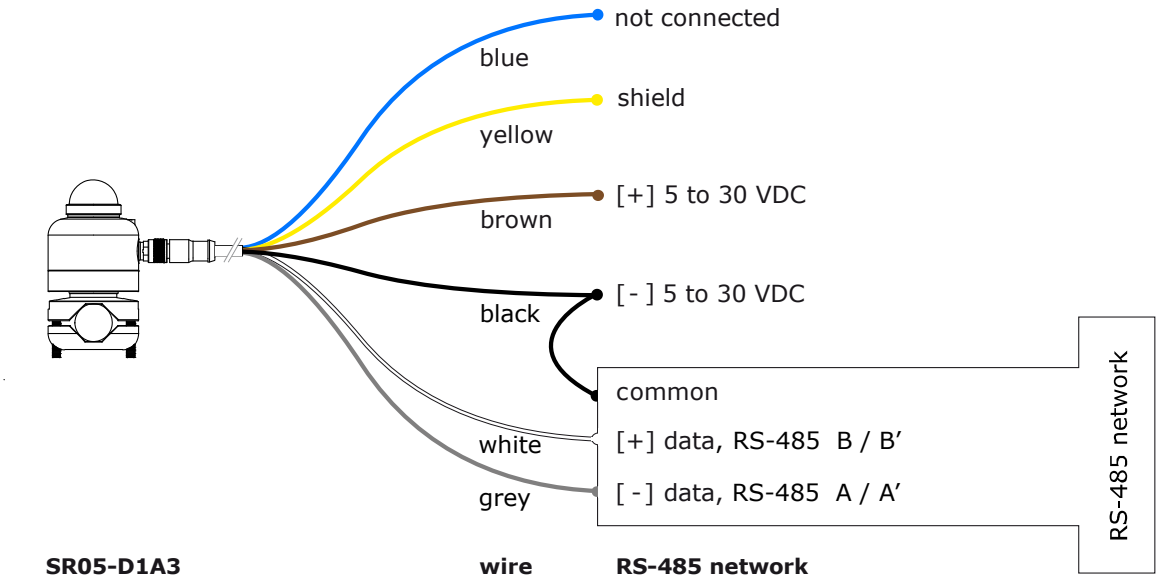

Figure 5.10.2 *Connection of SR05-D1A3 to an RS-485 network. SR05-D1A3 is powered by an external power supply of 5 to 30 VDC.*

5.11 Connecting SR05-D2A2 to a TTL device

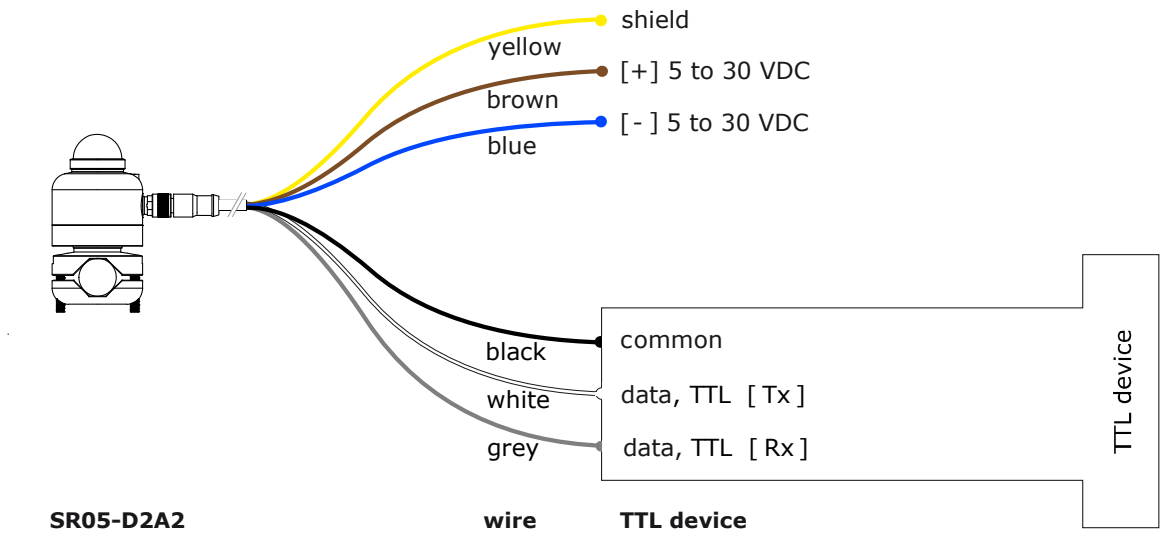

Figure 5.11.1 *Connection of SR05-D2A2 to a TTL device, in case SR05-D2A2 is powered by an external power supply of 5 to 30 VDC. SR05-D2A2 acts as Data Communication Equipment (DCE).*



With SR05-D2A2 over TTL, a potential difference exists between the VDC [-] (blue wire) and the common (black wire). This potential difference depends on the current drawn by the sensor. Care must be taken not to short circuit these wires. The TTL [Tx] (white wire) and TTL [Rx] (grey wire) signals are referenced with respect to the common (black wire). If the TTL device to which SR05-D2A2 is connected requires external power, this power must be drawn from a separate power supply with a floating potential with respect to the power supply used by SR05-D2A2.

5.12 Connecting SR05 to a PC

Both SR05-D1A3 and SR05-D2A2 can be accessed via a PC. In that case communication with the sensor is done via the user interface offered by the Sensor Manager software (see the next chapters) or by another Modbus testing tool.

5.12.1 Connecting SR05-D1A3 to a PC

Depending on the available ports on the PC, either an RS-485 to USB converter or an RS-485 to RS-232 converter is used. The figure below shows how connections are made. The converter must have galvanic isolation between signal input and output to prevent static electricity or other high-voltage surges to enter the data lines. An external power supply is required to power the SR05-D1A3 (5 to 30 VDC). An RS-485 to USB converter is usually powered via the USB interface: in this case no external power is needed to feed the converter. If an RS-485 to RS-232 converter is used, this converter should be powered by an external source. This may be the same supply used for the SR05-D1A3.

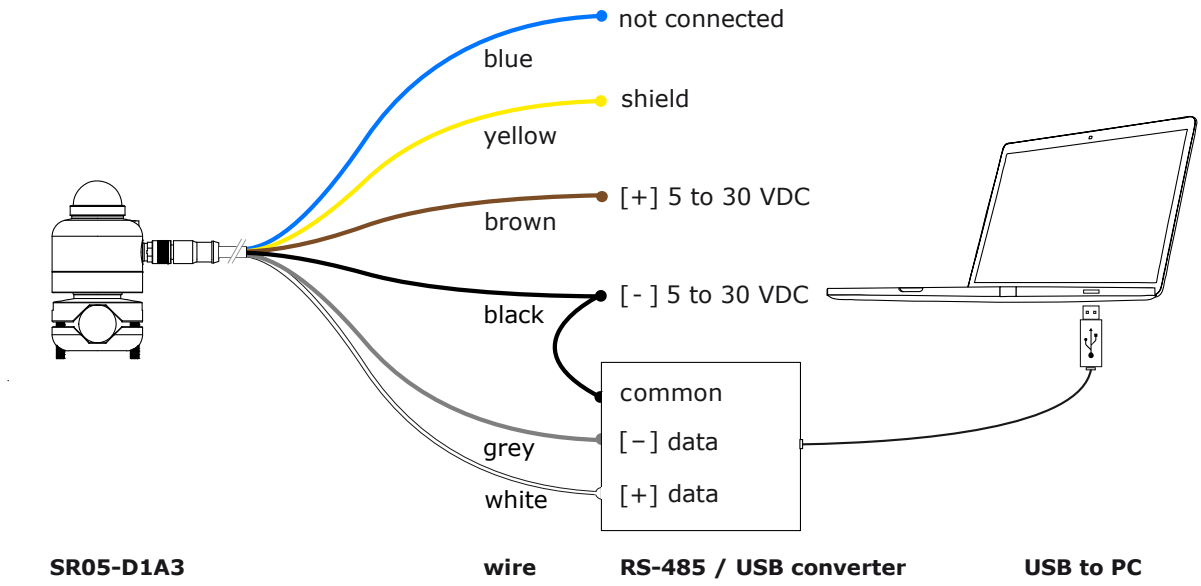

Figure 5.12.1.1 *Connecting SR05-D1A3 to an RS-485 to USB converter and a PC*

5.12.2 Connecting SR05-D2A2 to a PC

Depending on the available ports on the PC, either a TTL to USB converter or a TTL to RS-232 converter is used. The figure on the next page shows how connections are made. The converter must have galvanic isolation between signal input and output to prevent static electricity or other high-voltage surges to enter the data lines. An external power supply is required to power the SR05-D2A2 (5 to 30 VDC). A TTL to USB converter is usually powered via the USB interface: in this case no external power is needed to feed the converter. If a TTL to RS-232 converter is used, this converter should be powered by an external source. This may be the same supply used for the SR05-D2A2.

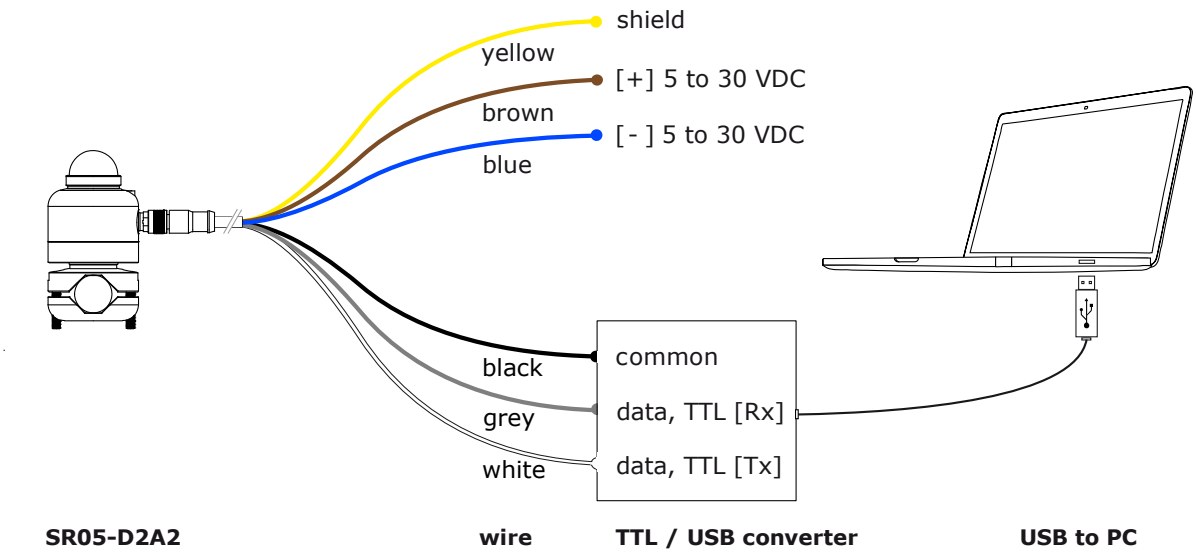

Figure 5.12.2.1 *Connecting SR05-D2A2 to a TTL to USB converter and a PC. SR05-D2A2 acts as Data Communication Equipment (DCE).*

6 Communication with SR05

6.1 PC communication: Sensor Manager software

The digital SR05 series can be accessed via a PC. In that case the communication with the sensor is done via the user interface offered by the Hukseflux Sensor Manager software or by another Modbus testing tool. The Sensor Manager can be downloaded by the user via www.hukseflux.com/page/downloads. Alternatively, there are links to testing tools, paid or freeware, available at www.modbus.org.
This chapter describes the functionality of the Sensor Manager only.

The Hukseflux Sensor Manager software provides a user interface for communication between a PC and SR05. It allows the user to locate, configure and test one or more SR05's and to perform simple laboratory measurements using a PC. The Sensor Manager's most common use is for initial functionality testing and modification of the SR05 Modbus address and communication settings. It is not intended for long-term continuous measurement purposes. For available software updates of the Sensor Manager, please check www.hukseflux.com/page/downloads.

6.1.1 Installing the Sensor Manager

Running the Sensor Manager requires installation of the latest version of Java Runtime Environment software. Java Runtime Environment may be obtained free of charge from www.java.com. The SR05 specifications overview (Table 3.1.1) shows the system and software requirements for using a PC to communicate with SR05.

1) Download the Hukseflux Sensor Manager via www.hukseflux.com/page/downloads.

2) Unzip the downloaded files and copy the folder "Hukseflux Sensor Manager" to a folder on a PC. For proper installation the user should have administrator rights for the PC.

3) Double-click "Hukseflux_Sensor_Manager.jar" in the folder "Hukseflux Sensor Manager". This will start up the Sensor Manager.

6.1.2 Trouble shooting during Sensor Manager installation

- When Java Runtime Environment software is not installed, a Windows message comes up, displaying "the file "Hukseflux_Sensor_Manager.jar" could not be opened". The solution is to install Java Runtime Environment on the PC and try again.

6.1.3 Sensor Manager: main window

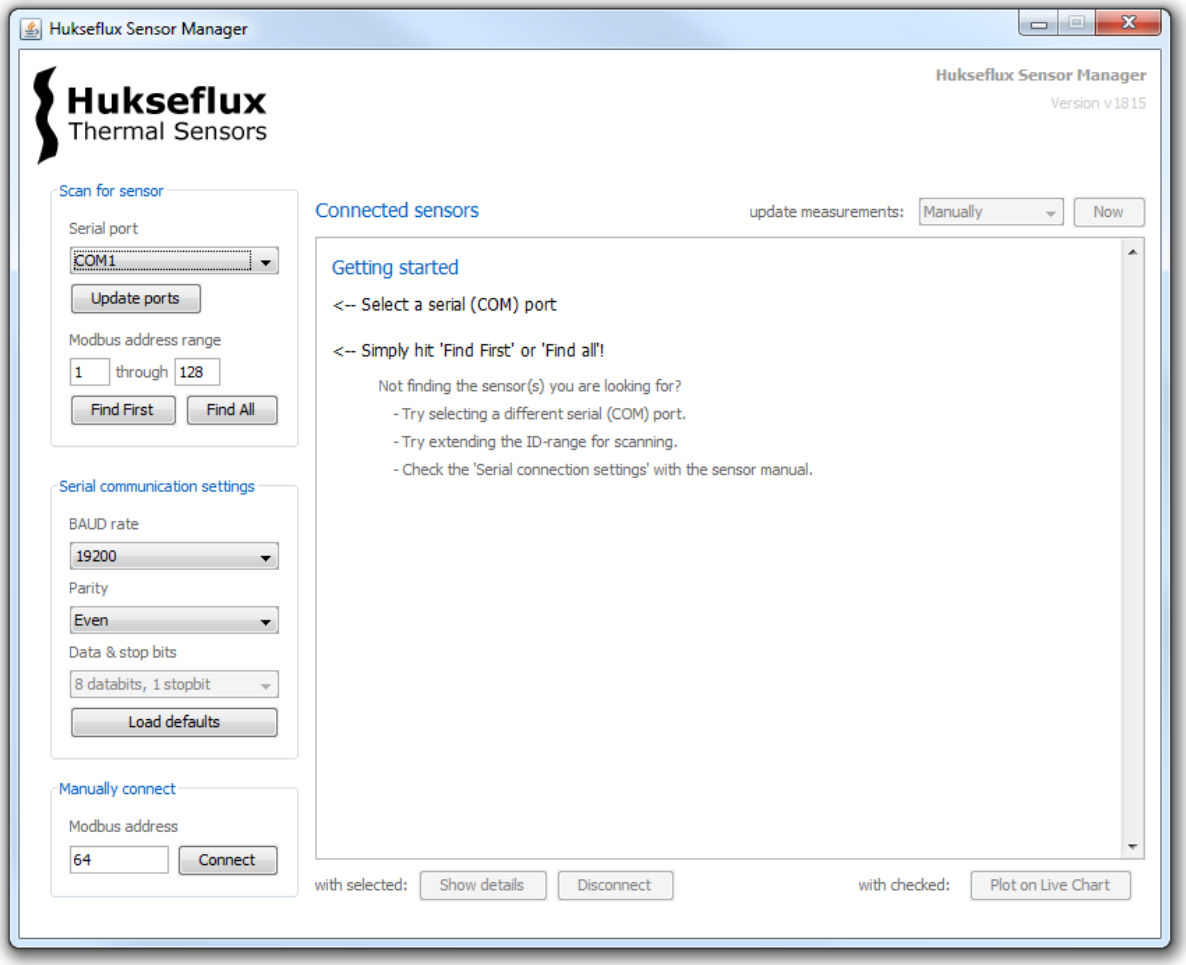

Figure 6.1.3.1 *Main window of the Sensor Manager*

When the Sensor Manager is started and a digital SR05 is connected to the PC, the user can communicate with the instrument.

If the instrument address and communication settings are known, the serial connection settings and the Modbus address can be entered directly. Clicking “Connect” will establish contact.

If the instrument address and communication settings are not known, the instrument is found by using the “Find First” or “Find All” function. The Sensor Manager scans the specified range of Modbus addresses, however only using the “Serial connection settings” as indicated on screen. When only one sensor is connected, using “Find First” is suggested because the operation stops when a sensor is found. “Find all” will continue a scan of the complete range of Modbus addresses and may take extra time.

If the “Find First” or “Find all” operation does not find instruments, a dialog box opens, asking to confirm a scan of the address range using all possible communication settings.

The time this operation takes, depends on the address range to be scanned. To complete a scan of 247 addresses will take over 15 minutes. When an instrument is found, a dialog box opens providing its serial number, Modbus address and communication settings. Communicating with the instrument is possible after changing the communication settings and Modbus address in the main window to the values of the instrument, and then clicking "Connect".

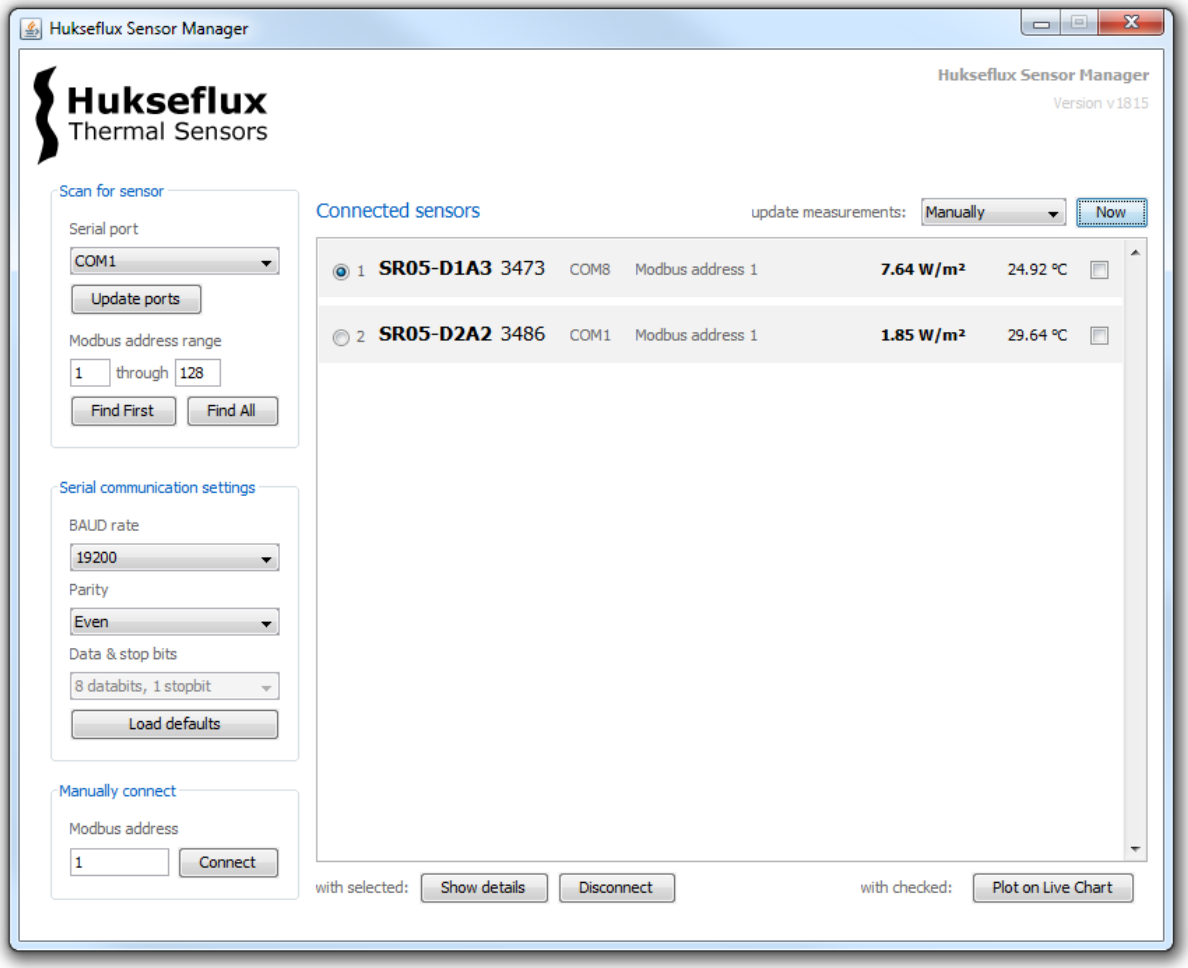

Figure 6.1.3.2 *Sensor Manager main window with two connected SR05's*

When an instrument is found, temperature and irradiance data are displayed. Updates are done manually or automatically. Automatic updates can be made every second, every 5 seconds or every minute.

6.1.4 Sensor Manager: plotting data

When the "Plot on Live Chart" button in the lower right corner is clicked the "Plot window" opens. A live graph is shown of the measurement with the selected instrument. The x-axis, time, is scaled automatically to display data of the complete measurement period. After checking the box "Show tail only", only the last minutes of measured data are displayed. When the "update interval" is 1 second, the "Show tail only" function is

available after around 10 minutes of data collection. The y-axis displays the measured irradiance in W/m^2. The Y-axis automatically scales to display the full measured range.

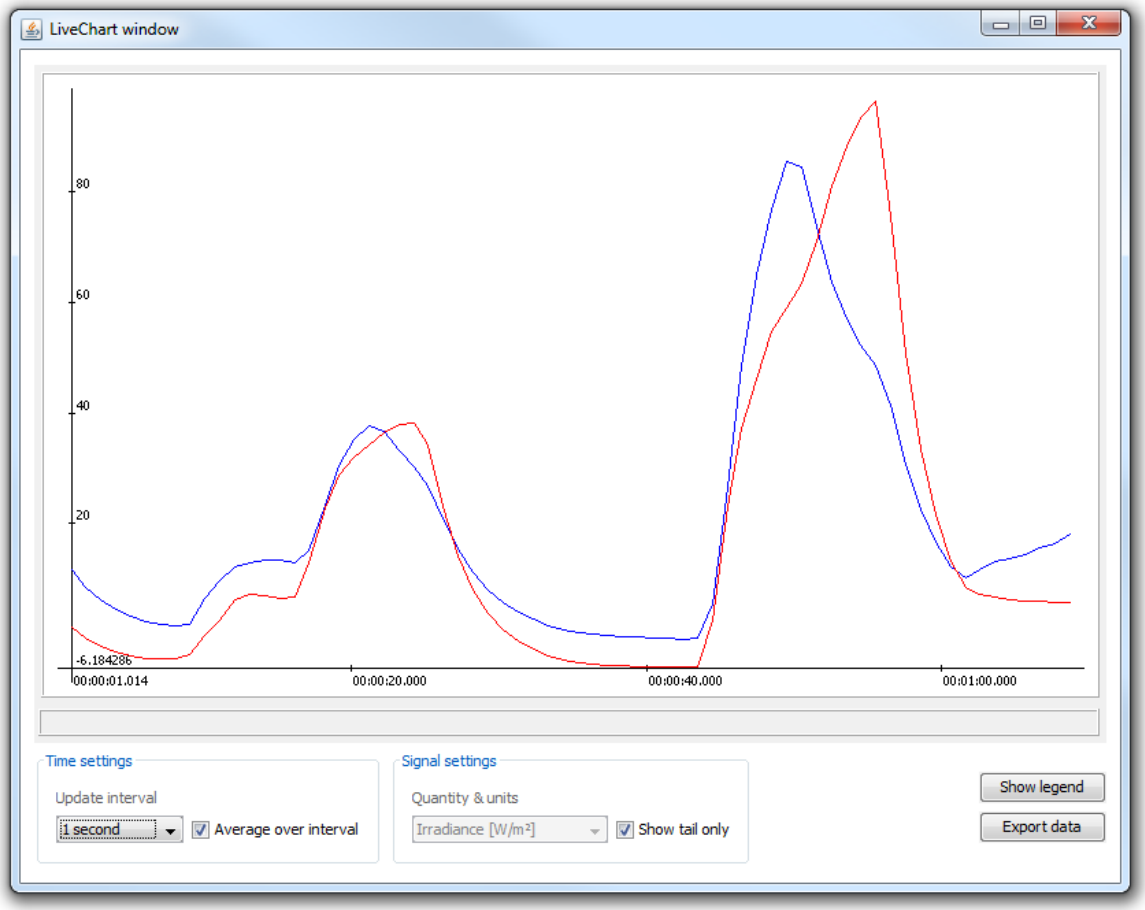

Figure 6.1.4.1 *Example of a SR05 irradiance plot in the Sensor Manager*

6.1.5 Sensor Manager: information about the instrument

The main window shows the "Show details" button, giving access to the "Sensor details" window. This window displays calibration results and calibration history, temperature coefficients and other properties of the selected instrument, as shown on the next page. The sensor serial number and all calibration information should match the information on the instrument label and on the product certificate.

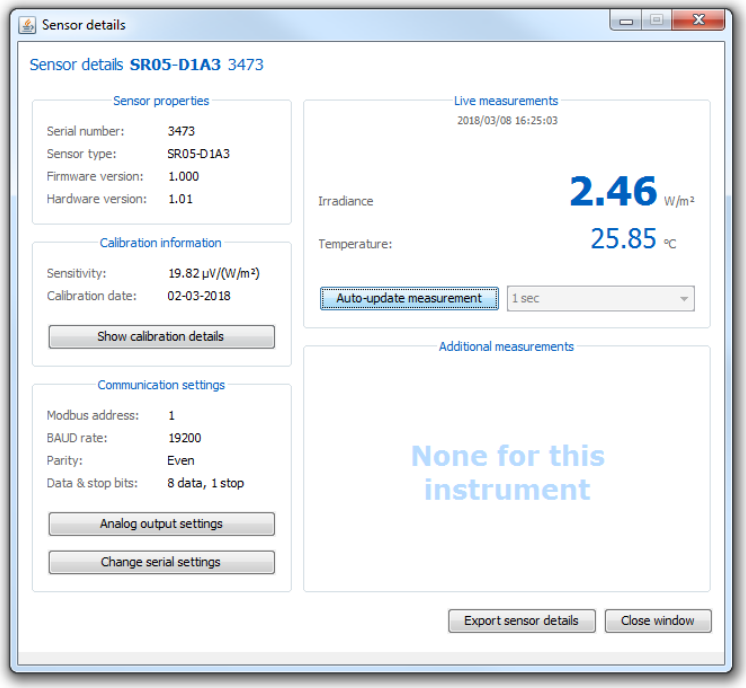

Figure 6.1.5.1 *Sensor details window in the Sensor Manager*

6.1.6 Sensor Manager: changing Modbus address and communication settings

In the "Sensor details" window the "Change serial settings" function opens the "Change serial communication settings" window, as shown in the figure below.

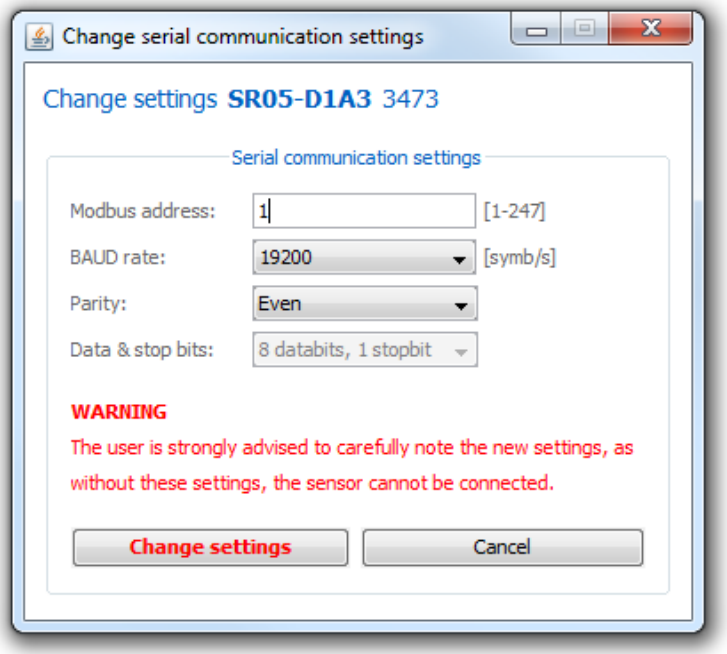

Figure 6.1.6.1 *Change serial communication settings window in the Sensor Manager*

When new communication settings or a new Modbus address are entered, these need to be confirmed by clicking "Change settings". The instrument will then automatically restart. In case the "Change settings" function is not activated, the original settings remain valid. If the Modbus address is changed, the Sensor Manager will automatically reconnect with the instrument using the new address after restart.

6.1.7 Sensor Manager: adjustment of the sensitivity by power users

The Sensor Manager does not allow a "standard user" to change any settings that have a direct impact on the instrument output, i.e. the irradiance in W/m^2. However, in case the instrument is recalibrated it is common practice that the sensitivity is adjusted, and that the latest result is added to the calibration history records. This can be done after obtaining a password and becoming a "power user". Please contact the factory to obtain the password and to get directions to become a "power user".

Example: During a calibration experiment, the result might be that SR05 has an irradiance output in W/m^2 that is 990, whereas the standard indicates it should be 970. The SR05 output is in this example 2.06 % too high. The original sensitivity of 16.15×10^{-6} $V/(W/m^2)$ ought to be changed to 16.48, using registers 41 + 42. The old calibration result is recorded in the calibration history file. In case there are still older results these are moved over to higher register numbers 63 to 81.

6.2 Network communication: function codes, registers, coils

Warning: Using the same Modbus address for more than one device will lead to irregular behaviour of the entire network. This chapter describes function codes, data model and registers used in the SR05 firmware. Communication is organised according to the specifications provided by the Modbus Organization. These specifications are explained in the documents "Modbus application protocol v1.1b" and "Modbus over serial line v1.02". These documents can be acquired free of charge at www.modbus.org.

Table 6.2.1 *Supported Modbus function codes*

SUPPORTED MODBUS FUNCTION CODES	
FUNCTION CODE (HEX)	**DESCRIPTION**
0x01	Read Coils
0x02	Read Discrete Inputs
0x03	Read Holding Registers
0x04	Read Input Register
0x05	Write Single Coil
0x06	Write Single Holding Register
0x0F	Write Multiple Coils
0x10	Write Multiple Registers

Table 6.2.2 *Modbus data model*

MODBUS DATA MODEL		
PRIMARY TABLES	**OBJECT TYPE**	**TYPE OF**
Discrete input	Single bit	R
Coil	Single bit	R/W
Input register	16 bit word	R
Holding register	16 bit word	R/W

R = read only, W = write only, R/W = read / write

The instrument does not distinguish between *discrete input* and *coil;* neither between *input register* and *holding register.*

Table 6.2.3 *Format of data*

FORMAT OF DATA	DESCRIPTION
U16	Unsigned 16 bit integer
S16	Signed 16 bit integer
U32	Unsigned 32 bit integer
S32	Signed 32 bit integer
Float	IEEE 754 32 bit floating point format
String	A string of ASCII characters

The data format includes *signed* and *unsigned* integers. The difference between these types is that a *signed* integer passes on negative values, which reduces the range of the integer by half. Up to five 16 bit registers can be requested in one request; if requesting six or more registers, multiple requests should be used.

If the format of data is a signed or an unsigned 32 bit integer, the first register received is the most significant word (MSW) and the second register is the least significant word (LSW). This way two 16 bit registers are reserved for a 32 bit integer. If the format of data is *float*, it is a 32 bit floating point operator and two 16 bit registers are reserved as well. Most network managing programs have standard menus performing this type of conversion. In case manual conversion is required, see the appendix on conversion of a floating point number to a decimal number. MSW and LSW should be read together in one request. This is necessary to make sure both registers contain the data of one internal voltage measurement. Reading out the registers with two different instructions may lead to the combination of LSW and MSW of two measurements at different points in time.

An Unsigned 32 bit integer can be calculated by the formula: (MSW x 2^{16})+LSW = U32**.** An example of such a calculation is available in the paragraph "Network communication: example master request to SR05".

Your data request may need an offset of +1 for each SR05 register number, depending on processing by the network master. Example: SR05 register number 7 + master offset = 7 + 1 = master register number 8. Consult the manual of the device acting as the local master.

Table 6.2.4 *Modbus registers 0 to 11, measurements. For basic operation, Hukseflux recommends to read out registers 2 + 3 for solar radiation, register 6 for instrument body temperature and register 40 for the sensor serial number.*

MODBUS REGISTERS 0-11				
REGISTER ADDRESS	**PARAMETER**	**DESCRIPTION OF CONTENT**	**TYPE OF**	**FORMAT OF DATA**
0	Modbus address	Sensor address in Modbus network, default = 1	R/W	U16
1	Serial communication settings	Sets the serial communication, default = 5	R/W	U16
2 + 3	Irradiance	signal in x 0.01 W/m²	R	S32
4 + 5	Factory use only			
6	Sensor body temperature	In x 0.01 ˚C	R	S16
7	Sensor electrical resistance	In x 0.1 Ω	R	U16
8	Scaling factor irradiance	Default = 100	R	U16
9	Scaling factor temperature	Default = 100	R	U16
10 + 11	Sensor voltage output	In x 10^{-9} V	R	S32
12 to 31	Factory use only			

Register 0, *Modbus address,* contains the Modbus address of the sensor. This allows the Modbus master to detect the slave, SR05-D1A3, in its network. The address can be changed; the value of the address must be between 1 and 247. The default Modbus address is 1.
Note: The sensor needs to be restarted before changes become effective.

Register 1, *Serial communication settings*, is used to enter the settings for baud rate and the framing of the serial data transfer. Default setting is setting number 5: *19200 baud, 8 data bits, even parity and 1 stop bit*. Setting options are shown in the table below.
Note: The sensor needs to be restarted before changes become effective.

Table 6.2.5 *Setting options of register 1*

SETTING OPTIONS				
SETTING NUMBER	**BAUD RATE**	**DATABITS**	**STOPBITS**	**PARITY**
1	9600	8	1	none
2	9600	8	1	even
3	9600	8	1	odd
4	19200	8	1	none
5 (= default)	19200	8	1	even
6	19200	8	1	odd
7	38400	8	1	none
8	38400	8	1	even
9	38400	8	1	odd
10	115200	8	1	none
11	115200	8	1	even
12	115200	8	1	odd

Register 2 + 3, *Irradiance,* provides the solar radiation output in 0.01 W/m². The value given must be divided by 100 to get the value in W/m². MSW and LSW should be read together in one request.

Register 6, *Instrument body temperature*, provides the temperature of the instrument body in 0.01 °C. The data must be divided by 100 to achieve the value in °C.

Register 7, *Sensor electrical resistance*, sensor resistance in 0.1 Ω. The data needs to be divided by 10 to get the value in Ω. This register returns a 0 by default. To read the resistance, first a measurement has to be performed. This can be done by writing 0xFF00 to coil 2. Hukseflux recommends to use this function only when necessary for diagnostics in case of sensor failure.

Register 8, *Scaling factor irradiance*, default scaling factor is 100

Register 9, *Scaling factor temperature*, default scaling factor is 100.

Register 10 + 11, *Sensor voltage output*, sensor voltage output signal of the thermopile in x 10^{-9} V.

Table 6.2.6 *Modbus registers 32 to 62, sensor and calibration information*

MODBUS REGISTERS 32-62				
REGISTER ADDRESS	**PARAMETER**	**DESCRIPTION OF CONTENT**	**TYPE OF**	**FORMAT OF DATA**
32 to 35	Sensor model	Part one of sensor description	R	String
36 to 39	Sensor model	Part two of sensor description	R	String
40	Sensor serial number		R	U16
41 + 42	Sensor sensitivity	In x 10^{-6} V/(W/m^2)	R	Float
43	Response time	In x 0.1 s	R	U16
44	Sensor resistance	In x 0.1 Ω	R	U16
45	Reserved	Always 0	R	U16
46 + 47	Sensor calibration date	Calibration date of the sensor in YYYYMMDD	R	U32
48 to 60	Factory use			
61	Firmware version		R	U16
62	Hardware version		R	U16

Registers 32 to 39, *Sensor model*, String of 8 registers. These registers will return 8 numbers which can be decoded to find the sensor model name. SR05-D1A3 sensors with serial number 3819 or higher and SR05-D2A2 sensors with serial number 3524 or higher use method A for storing the name in these registers. Sensors with lower serial numbers than these (mostly SR05-DA1 and SR05-DA2 sensors) use method B. Method A and B are explained in Appendix 9.12 of this manual.

Register 40, *Sensor serial number.*

Register 41 + 42, *Sensor sensitivity,* the sensitivity of the sensor in x 10^{-6} V/(W/m²). Format of data is *float.*

Register 43, *Response time,* the response time of the sensor as measured in the factory in x 0.1 s. The value must be divided by 10 to get the value in s.

Register 44, *Sensor electrical resistance,* returns the electrical resistance measured during the sensor calibration. The resistance is in x 0.1 Ω and must be divided by 10 to get the value in Ω.

Register 46 + 47, *Sensor calibration date*, last sensor calibration date, from which the sensitivity in register 41 and 42 was found, in YYYYMMDD.

Register 61, *Firmware version*.

Register 62, *Hardware version*.

Table 6.2.7 *Modbus registers 63 to 82, calibration history*

MODBUS REGISTERS 63-82				
REGISTER ADDRESS	**PARAMETER**	**DESCRIPTION OF CONTENT**	**TYPE OF**	**FORMAT OF DATA**
63 + 64	Sensor sensitivity history 1	In x 10^{-6} V/(W/m^2) Default value is 0	R	Float
65 + 66	Calibration date history 1	Former calibration date of the sensor in YYYYMMDD Default value is 0	R	U32
67 + 68	Sensor sensitivity history 2	See register 63 + 64	R	Float
69 + 70	Calibration date history 2	See register 65 + 66	R	U32
71 + 72	Sensor sensitivity history 3	See register 63 + 64	R	Float
73 + 74	Calibration date history 3	See register 65 + 66	R	U32
75 + 76	Sensor sensitivity history 4	See register 63 + 64	R	Float
77 + 78	Calibration date history 4	See register 65 + 66	R	U32
79 + 80	Sensor sensitivity history 5	See register 63 + 64	R	Float
81 + 82	Calibration date history 5	See register 65 + 66	R	U32

Register 63 to 82: Only accessible for writing by Sensor Manager *power users*: *power users* can write calibration history to registers 63 to 82. If default values are returned, no re-calibration has been written. Last calibration sensitivity and calibration date are available in register 41 + 42 and 46 + 47 respectively.



Please note that if your data request needs an offset of +1 for each SR05 register number, depending on processing by the network master, this offset applies to coils as well. Consult the manual of the device acting as the local master.

Table 6.2.8 *Coils*

COILS				
COIL	**PARAMETER**	**DESCRIPTION**	**TYPE OF**	**OBJECT TYPE**
0	Restart	Restart the sensor	W	Single bit
1	Reserved			
2	Check	Measure sensor electrical resistance	W	Single bit

Coil 0, *Restart*, when 0xFF00 is written to this coil the sensor will restart. If applied, a new Modbus address or new serial settings will become effective.

Coil 2, *Check*, when 0xFF00 is written to this coil the internal electronics will measure the electrical resistance of the thermopile. After the measurement, a new value will be written into register 7. Requesting to write this coil with a high repetition rate will result in irregular behaviour of the sensor; the check must be executed as an exceptional diagnostics routine only.

6.3 Network communication: getting started

Once it has the correct Modbus address and communication settings, SR05-D1A3 can be connected directly to an RS-485 network and a power supply. How to physically connect a sensor as a slave in a Modbus network is shown in chapter 5.11: Connecting a SR05-D1A3 to an RS-485 network. In such a connection the sensor is powered via an external power supply of 5 to 30 VDC. When the sensor is bolted onto a grounded mounting plate, which is usually the case, the shield is not connected to ground at the cable end.

Installing a SR05-D1A3 in the network also requires configuring the communication for this new Modbus device. This usually consists of defining a request that can be broadcast by the master. If the SR05-D1A3 is not already defined as a standard sensor type on the network, contact the supplier of the network equipment to see if a library file for the SR05-D1A3 is available.

Typical operation requires the master to make a request of irradiance data in registers 2 + 3, sensor temperature in register 6, and the sensor serial number in register 40 every 1 second, and store the 60 second averages. The data format of register 2 + 3 is a signed 32 bit integer and the temperature in register 6 is a signed 16 bit integer.

Up to five 16 bit registers can be requested in one request. In case six or more registers are requested in just one request, SR05-D1A3 will not respond. If requesting six or more registers, multiple requests should be used: SR05-D1A3 will respond as expected.

6.3.1 Adapting Modbus address and communication settings

Setting the instrument address and baud rate can be done in different ways:

- by connecting the sensor to the PC and using the Sensor Manager;
- by connecting the sensor to the PC and using another Modbus testing tool. There are links to different solutions available at www.modbus.org;
- by using the available network user interface software.

The Modbus address is stored in register 0 and has a default value of 1. A user may change the address to a value in the range of 1 to 247. The address value must be unique in the network. The communication settings are stored in register 1. The default setting is setting number 5 representing a communication with 19200 baud, even parity bit, 8 data bits and 1 stop bit. After a new address or communication setting is written the sensor must be restarted. This can be done by writing 0XFF00 to coil 0.

6.4 Network communication: example master request to SR05

Normal sensor operation consists of requesting the output of registers 2 + 3; the temperature compensated solar radiation. For quality assurance also the sensor serial number, register 40 and the temperature in register 6, are useful.

In this example a SR05 has address 64. The example requests the solar radiation (temperature compensated) register 2 + 3, sensor serial number, register 40, and the temperature of the instrument register 6. The values are represented in hexadecimals.

Note: 32 bit data are represented in 2 registers. MSW and LSW should be read together in one request.

Request for solar radiation, register 2 + 3:

Master Request:
[40] [03] [00][00] [00][04] [4B][18]

[40] = Modbus slave address, decimal equivalent = 64
[03] = Modbus function; 03 Read holding registers
[00][00] = Starting register, the master requests data starting from register 0.
[00][04] = Length, the number of registers the master wants to read. 4 registers
[4B][18] = CRC, the checksum of the transmitted data

Sensor response:
[40] [03] [08] [00][40] [00][05] [00][01] [7C][4F] [79][DA]

[40] = Modbus slave address, decimal equivalent = 64
[03] = Modbus function
[08] = Number of bytes returned by the sensor. 8 bytes transmitted by the sensor
[00][40] = Register 0; Modbus address
[00][05] = Register 1; Serial settings, 19200 baud, 8 data bits, even parity bit, 1 stop bit
[00][01] = Register 2; Temperature compensated signal, Most Significant Word (MSW). Decimal equivalent = 1
[7C][4F] = Register 3; Temperature compensated signal, Least Significant Word (LSW) = Decimal equivalent = 31823
[79][DA] = CRC, the checksum of the transmitted data

Together, register 2 and 3 are representing the temperature compensated solar radiation output measured by the SR05-D1A3. The MSW is in register 2 and the LSW in 3. The output has to be calculated by the formula: $((MSW \times 2^{16}) + LSW)/100$. In this example the result is: $((2^{16} \times 1) + 31823)/100 = 973.59$ W/m²

Request for body temperature, register 6:

Master Request:
[40][03][00][06][00][01][6B][1A]

[40] = Modbus Slave address
[03] = Modbus function
[00][06] = Start register
[00][01] = Number of registers
[6B][1A] = CRC

Sensor response:
[40][03][02][08][B1][43][FF]

[40] = Modbus Slave address
[03] = Modbus function
[02] = Number of bytes
[08][B1] = Content of register 7, decimal equivalent = 2225
[43][FF] = CRC

Temperature = Register 7 x 0.01 = 2225 x 0.01 = 22.25 °C

Register 6 represents the sensors body temperature. The received data needs to be divided by 100 to represent the correct outcome. In this example the result is: 2225 x 0.01 = 22.25 °C

Request for serial number, register 40:

Master Request:
[40][03][00][28][00][01][0B][13]

[40] = Modbus slave address
[03] = Modbus function
[00][28] = Start register
[00][01] = Number of registers
[0B][13] = CRC

Sensor response:
[40][03][02][0A][29][43][35]

[40] = Modbus Slave address
[03] = Modbus function
[02] = Number of bytes
[0A][29] = Content of register 40, decimal equivalent = 2601
[43][35] = CRC

Register 40 represents the sensors serial number. In this example the serial number is 2601.

7 Making a dependable measurement

7.1 The concept of dependability

A measurement with a pyranometer is called "dependable" if it is reliable, i.e. measuring within required uncertainty limits, for most of the time and if problems, once they occur, can be solved quickly.

The requirements for a measurement with a pyranometer may be expressed by the user as:

- required uncertainty of the measurement (see following paragraphs)
- requirements for maintenance and repairs (possibilities for maintenance and repair including effort to be made and processing time)
- a requirement to the expected instrument lifetime (until it is no longer feasible to repair)

It is important to realise that the uncertainty of the measurement is not only determined by the instrument but also by the way it is used.

See also ISO 9060 note 5. In case of pyranometers, the measurement uncertainty as obtained during outdoor measurements is a function of:

- the instrument class
- the calibration procedure / uncertainty
- the duration of instrument employment under natural sunlight (involving the instrument stability specification)
- the measurement conditions (such as tilting, ventilation, shading, instrument temperature)
- maintenance (mainly fouling)
- the environmental conditions*

Therefore, ISO 9060 says, "statements about the overall measurement uncertainty under outdoor conditions can only be made on an individual basis, taking all these factors into account".

* defined at Hukseflux as all factors outside the instrument that are relevant to the measurement such as the cloud cover (presence or absence of direct radiation), sun position, the local horizon (which may be obstructed) or condition of the ground (when tilted). The environmental conditions also involve the question whether or not the measurement at the location of measurement is representative of the quantity that should be measured.

7.2 Reliability of the measurement

A measurement is reliable if it measures within required uncertainty limits for most of the time. We distinguish between two causes of unreliability of the measurement:

- related to the reliability of the pyranometer and its design, manufacturing, calibration (hardware reliability).
- related to the reliability of the measurement uncertainty (measurement reliability), which involves hardware reliability as well as condition of use.

Most of the hardware reliability is the responsibility of the instrument manufacturer. The reliability of the measurement however is a joint responsibility of instrument manufacturer and user. As a function of user requirements, taking into account measurement conditions and environmental conditions, the user will select an instrument of a certain class, and define maintenance support procedures.

In many situations there is a limit to a realistically attainable accuracy level. This is due to conditions that are beyond control once the measurement system is in place. Typical limiting conditions are:

- the measurement conditions, for instance when working at extreme temperatures when the instrument temperature is at the extreme limits of the rated temperature range.
- the environmental conditions, for instance when installed at a sub-optimal measurement location with obstacles in the path of the sun.
- other environmental conditions, for instance when assessing PV system performance and the system contains panels at different tilt angles, the pyranometer measurement may not be representative of irradiance received by the entire PV system.

The measurement reliability can be improved by maintenance support. Important aspects are:

- dome fouling by deposition of dust, dew, rain or snow. Fouling results in undefined measurement uncertainty (sensitivity and directional error are no longer defined). This should be solved by regular inspection and cleaning.
- sensor instability. Maximum expected sensor aging is specified per instrument as its non-stability in [% change / year]. In case the sensor is not recalibrated, the uncertainty of the sensitivity gradually will increase. This is solved by regular recalibration.
- moisture condensing under pyranometer domes resulting in a slow change of sensitivity (within specifications). This is solved by regular replacement of desiccant or by maintenance (drying the entire sensor) in case the sensor allows this. For non-serviceable sensors like most second class pyranometers, this may slowly develop into a defect. For first class and secondary standard models (for instance model SR11 first class pyranometer and SR20-D2 digital secondary standard pyranometer) extra desiccant (in a set of 5 bags in an air tight bag) is available.

Another way to improve measurement reliability is to introduce redundant sensors.

- the use of redundant instruments allows remote checks of one instrument using the other as a reference, which leads to a higher measurement reliability.
- in PV system performance monitoring, in addition to instruments measuring in the plane of array, horizontally placed instruments are used for the measurement of global radiation. Global irradiance data enable the user to compare the local climate and system efficiency between different sites. These data can also be compared to measurements by local meteorological stations.

7.3 Speed of repair and maintenance

Dependability is not only a matter of reliability but also involves the reaction to problems; if the processing time of service and repairs is short, this contributes to the dependability.

Hukseflux pyranometers are designed to allow easy maintenance and repair. The main maintenance actions are:

- replacement of desiccant
- replacement of cabling

For optimisation of dependability a user should:

- design a schedule of regular maintenance
- design a schedule of repair or replacement in case of defects

When operating multiple instruments in a network Hukseflux recommends keeping procedures simple and having a few spare instruments to act as replacements during service, recalibrations and repair.

7.4 Uncertainty evaluation

The uncertainty of a measurement under outdoor or indoor conditions depends on many factors, see paragraph 1 of this chapter. It is not possible to give one figure for pyranometer measurement uncertainty. The work on uncertainty evaluation is "in progress". There are several groups around the world participating in standardisation of the method of calculation. The effort aims to work according to the guidelines for uncertainty evaluation (according to the "Guide to Expression of Uncertainty in Measurement" or GUM).

7.4.1 Evaluation of measurement uncertainty under outdoor conditions

Hukseflux actively participates in the discussions about pyranometer measurement uncertainty; we also provide spreadsheets, reflecting the latest state of the art, to assist our users in making their own evaluation. The input to the assessment is summarised:

1) The formal evaluation of uncertainty should be performed in accordance with ISO 98-3 Guide to the Expression of Uncertainty in Measurement, GUM.
2) The specifications of the instrument according to the list of ISO 9060 classification of pyranometers and pyrheliometers are entered as limiting values of possible errors, to be analysed as type B evaluation of standard uncertainty per paragraph 4.3.7. of GUM. A priori distributions are chosen as rectangular.
3) A separate estimate has to be entered to allow for estimated uncertainty due to the instrument maintenance level.
4) The calibration uncertainty has to be entered. Please note that Hukseflux calibration uncertainties are lower than those of alternative equipment. These uncertainties are entered in measurement equation (equation is usually Formula 0.1: E = U/S), either as an uncertainty in E (zero offsets, directional response) in U (voltage readout errors) or in S (tilt error, temperature dependence, calibration uncertainty).
5) In uncertainty analysis for pyranometers, the location and date of interest is entered. The course of the sun is then calculated, and the direct and diffuse components are estimated, based on a model; the angle of incidence of direct radiation is a major factor in the uncertainty.
6) In uncertainty analysis for modern pyrheliometers: tilt dependence often is so low that one single typical observation may be sufficient.
7) In case of special measurement conditions, typical specification values are chosen. These should for instance account for the measurement conditions (shaded / unshaded, ventilated/ unventilated, horizontal / tilted) and environmental conditions (clear sky / cloudy, working temperature range).
8) Among the various sources of uncertainty, some are “correlated”; i.e. present during the entire measurement process, and not cancelling or converging to zero when averaged over time; the off-diagonal elements of the covariance matrix are not zero. Paragraph 5.2 of GUM.
9) Among the various sources of uncertainty, some are “uncorrelated”; cancelling or converging to zero when averaged over time; the off-diagonal elements of the covariance matrix are zero. Paragraph 5.1 of GUM.
10) Among the various sources of uncertainty, some are “not included in analysis”; this applies for instance to non-linearity for pyranometers, because it is already included in the directional error, and the spectral response for pyranometers and pyrheliometers because it is already taken into account in the calibration process.

Table 7.4.1.1 *Preliminary estimates of achievable uncertainties of measurements with Hukseflux pyranometers. The estimates are based on typical pyranometer properties and calibration uncertainty, for sunny, clear sky days and well maintained stations, without uncertainty loss due to lack of maintenance and due to instrument fouling. The table specifies expanded uncertainties with a coverage factor of 2 and confidence level of 95 %. Estimates are based on 1 s sampling. IMPORTANT NOTE: there is no international consensus on uncertainty evaluation of pyranometer measurements, so this table should not be used as a formal reference.*

Pyranometer class (ISO 9060)	season	latitude	uncertainty minute totals at solar noon	uncertainty hourly totals at solar noon	uncertainty daily totals
secondary standard	summer	mid-latitude	2.7 %	2.0 %	1.9 %
		equator	2.6 %	1.9 %	1.7 %
		pole	7.9 %	5.6 %	4.5 %
	winter	mid-latitude	3.4 %	2.5 %	2.7 %
first class	summer	mid-latitude	4.7 %	3.3 %	3.4 %
		equator	4.4 %	3.1 %	2.9 %
		pole	16.1%	11.4 %	9.2 %
	winter	mid-latitude	6.5 %	4.5 %	5.2 %
second class (SR05 series)	summer	mid-latitude	8.4 %	5.9 %	6.2 %
		equator	7.8 %	5.5 %	5.3 %
		pole	29.5 %	21.6 %	18.0 %
	winter	mid-latitude	11.4 %	8.1 %	9.9 %

7.4.2 Calibration uncertainty

New calibration procedures were developed in close cooperation with PMOD World Radiation Center in Davos, Switzerland. The latest calibration method results in an uncertainty of the sensitivity of less than 2.4 %, compared to typical uncertainties of higher than 3.5 % for this pyranometer class. See the appendix for detailed information on calibration hierarchy.

8 Maintenance and trouble shooting

8.1 Recommended maintenance and quality assurance

SR05 can measure reliably at a low level of maintenance in most locations. Usually unreliable measurements will be detected as unreasonably large or small measured values. As a general rule this means that regular visual inspection combined with a critical review of the measured data, preferably checking against other measurements, is the preferred way to obtain a reliable measurement.

Table 8.1.1 *Recommended maintenance of SR05. If possible the data analysis and cleaning (1 and 2) should be done on a daily basis. (continued on next page)*

MINIMUM RECOMMENDED PYRANOMETER MAINTENANCE			
	INTERVAL	SUBJECT	ACTION
1	1 week	data analysis	compare measured data to maximum possible / maximum expected irradiance and to other measurements nearby (redundant instruments). Also historical seasonal records can be used as a source for expected values. Analyse night time signals. These signals may be negative (down to - 5 W/m^2 on clear windless nights), due to zero offset a. In case of use with PV systems, compare daytime measurements to PV system output. Look for any patterns and events that deviate from what is normal or expected
2	2 weeks	cleaning	use a soft cloth to clean the dome of the instrument, persistent stains can be treated with soapy water or alcohol
3	6 months	inspection	inspect cable quality, inspect connectors, inspect mounting position, inspect cable, clean instrument, clean cable, inspect levelling, change instrument tilt in case this is out of specification, inspect mounting connection, inspect interior of dome for condensation
4	2 years	desiccant replacement	desiccant is specified to last for minimum 2 years. In case the user wants to replace desiccant himself, this is at own risk and should only be executed in an ESD-safe work environment. The bottom plate of SR05 should be removed by unscrewing 3 x T10 screws with a Torx 10 screwdriver. The desiccant bag is taped on the bottom plate of SR05. Care should be taken when mounting the bottom plate on SR05
5	2 years	recalibration	recalibration by side-by-side comparison to a higher standard instrument in the field according to ISO 9847 request "power user" status and a password at the factory permitting to write to registers holding the sensitivity and the calibration history data via the Sensor Manager
6		lifetime assessment	judge if the instrument should be reliable for another 2 years, or if it should be replaced

MINIMUM RECOMMENDED PYRANOMETER MAINTENANCE (continued)			
7	6 years	parts replacement	if applicable / necessary replace the parts that are most exposed to weathering; cable, connector. NOTE: use Hukseflux approved parts only
8		internal inspection	if applicable: open instrument and inspect / replace O-rings; dry internal cavity around the circuit board
9		recalibration	high-accuracy recalibration indoors according to ISO 9847 or outdoors according to ISO 9846

8.2 Trouble shooting

Table 8.2.1 *Trouble shooting for SR05 (continued on next page)*

General	Inspect the instrument for any damage. Inspect if the connector is properly attached. Check the condition of the connectors (on chassis as well as the cable). Inspect if the sensor receives DC voltage power in the range of 5 to 30 VDC. Inspect the connection of the shield (typically not connected at the network side). Inspect the connection of the sensor power supply, typically the negative is connected to the network *common*.
Prepare for indoor testing	Install the Sensor Manager software on a PC. Equip the PC with RS-485 or TTL communication for respectively SR05-D1A3 and SR05-D2A2. Put DC voltage power to the sensor and establish communication with the sensor. At power–up the signal may have a temporary output level different from zero; an offset. Let this offset settle down.
The sensor does not give any signal	Check if the sensor reacts to light: expose the sensor to a strong light source, for instance a 100 W light bulb at 0.1 m distance. The signal should read > 100 W/m^2 now. Darken the sensor either by putting something over it or switching off the light. The instrument voltage output should go down and within one minute approach 0 W/m^2. Check the data acquisition by replacing the sensor with a spare sensor with the same address.
Not able to communicate with the sensor	Check all physical connections to the sensor and try connecting to the sensor again. If communicating is not possible, try to figure out if the address and communication settings are correct. Analyse the cable performance by measuring resistance from pins to cable ends. The electrical resistance should be < 10 Ω. In case of doubt, try a new cable. Connect sensor to a PC and perform the "Find" and "Find all" operation with the Sensor Manager to locate the sensor and verify the communication settings. If all physical connections are correct, and the sensor still cannot be found, please contact the factory to send the sensor to the manufacturer for diagnosis and service.
SR05 does not respond to a request for 6 or more registers	It is not possible to request more than five 16 bit registers in one request. In case of requesting six or more registers in just one request, the sensor will not respond. If requesting six or more registers, use multiple requests: the sensor will respond as expected.
The sensor signal is	Note that night-time signals may be negative (down to -5 W/m^2 on clear windless nights), due to zero offset a.

unrealistically high or low	Check if the pyranometer has a clean dome. Check the location of the pyranometer; are there any obstructions that could explain the measurement result. Check the orientation / levelling of the pyranometer. Check the cable condition looking for cable breaks. Check the condition of the connectors (on chassis as well as the cable).
The sensor signal shows unexpected variations	Check the presence of strong sources of electromagnetic radiation (radar, radio). Check the condition and connection of the shield. Check the condition of the sensor cable. Check if the cable is not moving during the measurement. Check the condition of the connectors (on chassis as well as the cable)
The dome shows internal condensation	Arrange to send the sensor back to Hukseflux for diagnosis.

8.3 Calibration and checks in the field

Recalibration of field pyranometers is typically done by comparison in the field to a reference pyranometer. The applicable standard is ISO 9847 "International Standard-Solar Energy- calibration of field pyranometers by comparison to a reference pyranometer". At Hukseflux an indoor calibration according to the same standard is used.

Hukseflux recommendation for re-calibration:
if possible, perform calibration indoor by comparison to an identical reference instrument, under normal incidence conditions.

The recommended calibration interval of pyranometers is 2 years. The registers containing the applied sensitivity and the calibration history of SR05 are accessible for users. This allows the user to choose his own local calibration service. The same feature may be used for remotely controlled re-calibration of pyranometers in the field. Ask Hukseflux for information on ISO and ASTM standardised procedures for field calibration. Request "power user" status and a password at the factory permitting to write to registers holding the sensitivity and the calibration history data via the Sensor Manager.

In case of field comparison; ISO recommends field calibration to a higher class pyranometer. Hukseflux suggests also allowing use of sensors of the same model and class, because intercomparisons of similar instruments have the advantage that they suffer from the same offsets. It is therefore just as good to compare to pyranometers of the same brand and type as to compare to an instrument of a higher class. ISO recommends to perform field calibration during several days; 2 to 3 days under cloudless conditions, 10 days under cloudy conditions. In general this is not achievable. In order to shorten the calibration process Hukseflux suggests to allow calibration at normal incidence, using hourly totals near solar noon.

Hukseflux main recommendations for field intercomparisons are:

1) to take normal incidence as a reference and not the entire day.
2) to take a reference of the same brand and type as the field pyranometer or a pyranometer of a higher class, and
3) to connect both to the same electronics, so that electronics errors (also offsets) are eliminated.
4) to mount all instruments on the same platform, so that they have the same body temperature.
5) assuming that the electronics are independently calibrated, to analyse radiation values at normal incidence radiation (possibly tilting the radiometers to approximately normal incidence), if this is not possible to compare 1 hour totals around solar noon for horizontally mounted instruments.
6) for second class radiometers, to correct deviations of more than ± 10 %. Lower deviations should be interpreted as acceptable and should not lead to a revised sensitivity.
7) for first class pyranometers, to correct deviations of more than ± 5 %. Lower deviations should be interpreted as acceptable and should not lead to a revised sensitivity.
8) for secondary standard instruments, to correct deviations of more than ± 3 %. Lower deviations should be interpreted as acceptable and should not lead to a revised sensitivity.

8.4 Data quality assurance

Quality assurance can be done by:

- analysing trends in solar irradiance signal
- plotting the measured irradiance against mathematically generated expected values
- comparing irradiance measurements between sites
- analysis of night time signals

The main idea is that one should look out for any unrealistic values. There are programs on the market that can semi-automatically perform data screening. See for more information on such a program: www.dqms.com.

9 Appendices

9.1 Appendix on cable extension / replacement

The sensor cable of the SR05 series is equipped with a M12-A straight connector. In case of cable replacement, it is recommended to purchase a new cable with connector at Hukseflux. In case of cable extension, it is recommended to purchase an extension cable with connector pairs at Hukseflux. Please note that Hukseflux does not provide support for Do-It-Yourself connector and cable assembly.

SR05 is equipped with one cable. Maximum length of the sensor cable is recommended to be 40 metres. It is good practice to keep the length of the cable as short as possible to avoid inference of the signal and keep noise at acceptable levels.

Do not use SR05's original factory-made cables with a total length of more than 40 metres.

Connector and cable specifications are summarised on the next page.



Figure 9.1.1 *On the left the SR05 cable with M12-A female connector on sensor end. The cable is non-stripped on the other end. Its length is 3 metres standard and available in 10 and 20 metres too. On the right Hukseflux extension cable with connector pairs, with male and female M12-A connectors, available in 10 and 20 metres.*

Table 9.1.1 *Specifications for SR05 cable replacement and extension*

General replacement	please order a new cable with connector at Hukseflux
General cable extension	please order an extension cable with connector pairs at Hukseflux
Connectors used	chassis: M12-A straight male connector, male thread, 5-pole manufacturer: Binder cable: M12-A straight female connector, female thread, 5-pole manufacturer: Binder The shield is electrically connected to the connector housing
Cable	5-wire, shielded manufacturer: Binder
Length	cables should be kept as short as possible; total cable length should be less than 40 m
Outer sheath	with specifications for outdoor use (for good stability in outdoor applications)

9.2 Appendix on tools for SR05

Table 9.2.1 *Specifications of tools for SR05*

CONFIGURATION	TOOLS	INCLUDED
tooling required for mounting SR05 without ball levelling	two M5 bolts applicable screwdriver	no no
tooling required for mounting SR05 with ball levelling	hex key 4 mm wrench size 8 mm for M5 nuts	yes no
tooling required for mounting SR05 with tube mount	hex key 4 mm	yes
tooling required for levelling SR05 with ball levelling and tube mount	hex key 4 mm	yes
tooling required for tipping the aluminium shim out of SR05's bottom panel position	screwdriver blade width 2 to 4 mm	no

9.3 Appendix on spare parts for SR05

- SR05 cable with female M12-A connector on sensor end, non-stripped on other end (3, 10, 20 m). Specify cable length
- SR05 extension cable with connector pair, with male and female M12-A connectors, (10, 20 m). Specify extension cable length
- Ball levelling (order number BL01)
- Tube mount (order number TM01)
- Tube mount with ball levelling (order number TMBL01)
- Shim for ball levelling mount
- Countersunk set screw for ball levelling mount
- 2 x M5x40 mounting bolts
- 2 x M5x30 mounting bolts
- 2 x M5x20 mounting bolts with 2 x M5 nuts
- Desiccant (silica gel, 1.0 g, in a HDPE bag)

NOTE: Dome, level and sensor of SR05 cannot be supplied as spare parts

9.4 Appendix on standards for classification and calibration

Both ISO and ASTM have standards on instrument classification and methods of calibration. The World Meteorological Organisation (WMO) has largely adopted the ISO classification system.

Table 9.4.1 *Pyranometer standardisation in ISO and ASTM.*

STANDARDS ON INSTRUMENT CLASSIFICATION AND CALIBRATION	
ISO STANDARD	EQUIVALENT ASTM STANDARD
ISO 9060:1990 Solar energy -- Specification and classification of instruments for measuring hemispherical solar and direct solar radiation	not available Comment: work is in progress on a new ASTM equivalent standard
Comment: a standard "Solar energy --Methods for testing pyranometer and pyrheliometer characteristics" has been announced in ISO 9060 but is not yet implemented.	not available
ISO 9846:1993 Solar energy -- Calibration of a pyranometer using a pyrheliometer	ASTM G167 - 05 Standard Test Method for Calibration of a Pyranometer Using a Pyrheliometer
ISO 9847:1992 Solar energy -- Calibration of field pyranometers by comparison to a reference pyranometer	ASTM E 824 -10 Standard Test Method for Transfer of Calibration from Reference to Field Radiometers ASTM G207 - 11 Standard Test Method for Indoor Transfer of Calibration from Reference to Field Pyranometers
ISO 9059:1990 Solar energy -- Calibration of field pyrheliometers by comparison to a reference pyrheliometer	ASTM E 816 Standard Test Method for Calibration of Pyrheliometers by Comparison to Reference Pyrheliometers

9.5 Appendix on calibration hierarchy

The World Radiometric Reference (WRR) is the measurement standard representing the SI unit of irradiance. Use of WRR is mandatory when working according to the standards of both WMO and ISO. ISO9874 states under paragraph 1.3: the methods of calibration specified are traceable to the WRR. The WMO manual states under paragraph 7.1.2.2: the WRR is accepted as representing the physical units of total irradiance.

The worldwide homogeneity of the meteorological radiation measurements is guaranteed by the World Radiation Center in Davos Switzerland, by maintaining the World Standard Group (WSG) which materialises the World Radiometric Reference.

See www.pmodwrc.ch

The Hukseflux standard is traceable to an outdoor WRR calibration. Some small corrections are made to transfer this calibration to the Hukseflux standard conditions: sun at zenith and 1000 W/m^2 irradiance level. During the outdoor calibration the sun is typically at 20 to 40° zenith angle, and the total irradiance at a 700 W/m^2 level.

Table 9.5.1 *Calibration hierarchy for pyranometers*

WORKING STANDARD CALIBRATION AT PMOD / WRC DAVOS
Calibration of working standard pyranometers: Method: ISO 9846, type 1 outdoor. This working standard has an uncertainty "uncertainty of standard". The working standard has been calibrated under certain "test conditions of the standard". The working standard has traceability to WRR world radiometric reference.
CORRECTION OF (WORKING) STANDARD CALIBRATION TO STANDARDISED REFERENCE CONDITIONS
Correction from "test conditions of the standard" to "reference conditions" i.e. to normal incidence and 20 °C: Using known (working) standard pyranometer properties: directional, non linearity, offsets, temperature dependence). This correction has an uncertainty; "uncertainty of correction". At Hukseflux we also call the working standard pyranometer "standard".
INDOOR PRODUCT CALIBRATION
Calibration of products, i.e. pyranometers: Method: according to ISO 9847, Type IIc, which is an indoor calibration. This calibration has an uncertainty associated with the method. (In some cases like the BSRN network the product calibration is with a different method; for example again type 1 outdoor)
CALIBRATION UNCERTAINTY CALCULATION
ISO 98-3 Guide to the Expression of Uncertainty in Measurement, GUM Determination of combined expanded uncertainty of calibration of the product, including uncertainty of the working standard, uncertainty of correction, uncertainty of the method (transfer error). The coverage factor must be determined; at Hukseflux we work with a coverage factor k = 2.

9.6 Appendix on meteorological radiation quantities

A pyranometer measures irradiance. The time integrated total is called radiant exposure. In solar energy radiant exposure is often given in $W \cdot h/m^2$.

Table 9.6.1 *Meteorological radiation quantities as recommended by WMO (additional symbols by Hukseflux Thermal Sensor). POA stands for Plane of Array irradiance. The term originates from ASTM and IEC standards.*

SYMBOL	DESCRIPTION	CALCULATION	UNITS	ALTERNATIVE EXPRESSION	
$E\downarrow$	downward irradiance	$E\downarrow = E_g\downarrow + E_l\downarrow$	W/m^2		
$H\downarrow$	downward radiant exposure for a specified time interval	$H\downarrow = H_g\downarrow + H_l\downarrow$	J/m^2		
$E\uparrow$	upward irradiance	$E\uparrow = E_g\uparrow + E_l\uparrow$	W/m^2		
$H\uparrow$	upward radiant exposure for a specified time interval	$H\uparrow = H_g\uparrow + H_l\uparrow$	J/m^2	$W \cdot h/m^2$	Change of units
E	direct solar irradiance normal to the apparent solar zenith angle		W/m^2	DNI	Direct Normal Irradiance
E_0	solar constant		W/m^2		
$E_{g\downarrow h}$	global irradiance; hemispherical irradiance on a specified, in this case horizontal surface.*	$E_g\downarrow = E\cos\theta_h + E_d\downarrow$	W/m^2	GHI	Global Horizontal Irradiance
$E_{g\downarrow t}$	global irradiance; hemispherical irradiance on a specified, in this case tilted surface.*	$E_{g\downarrow t} = E\cdot\cos\theta_t + E_{d\downarrow t} + E_{r\uparrow t}$ ***	W/m^2	POA	Plane of Array
$E_d\downarrow$	downward diffuse solar radiation		W/m^2	DHI	Diffuse Horizontal Irradiance
$E_l\uparrow$, $E_l\downarrow$	upward / downward long-wave irradiance		W/m^2		
$E_r\uparrow$	reflected solar irradiance		W/m^2		
E^*	net irradiance	$E^* = E\downarrow - E\uparrow$	W/m^2		
$T\downarrow$	apparent surface temperature**		ºC or K		
$T\uparrow$	apparent sky temperature**		ºC or K		
SD	sunshine duration		h		

θ is the apparent solar zenith angle θ_h relative to horizontal, θ_t relative to a tilted surface
g = global, l = long wave, t = tilted *, h = horizontal*
* distinction horizontal and tilted from Hukseflux,
** T symbols introduced by Hukseflux,
*** contributions of $E_{d\downarrow t}$ and $E_{r\uparrow t}$ are $E_d\downarrow$ and $E_r\uparrow$ both corrected for the tilt angle of the surface

9.7 Appendix on ISO and WMO classification tables

Table 9.7.1 *Classification table for pyranometers per ISO 9060 and WMO. NOTE: WMO specification of spectral selectivity is different from that of ISO. Hukseflux conforms to the ISO limits. WMO also specifies expected accuracies. ISO finds this not to be a part of the classification system because it also involves calibration. Please note that WMO achievable accuracies are for clear days at mid latitudes and that the uncertainty estimate does not include uncertainty due to calibration*.*

ISO CLASSIFICATION TABLE**			
ISO CLASS	SECONDARY STANDARD	FIRST CLASS	SECOND CLASS
Specification limit			
Response time (95 %)	15 s	30 s	60 s
Zero offset a (response to 200 W/m^2 net thermal radiation)	+ 7 W/m^2	+ 15 W/m^2	+ 30 W/m^2
Zero offset b (response to 5 K/h in ambient temperature)	± 2 W/m^2	± 4 W/m^2	± 8 W/m^2
Non-stability (change per year)	± 0.8 %	± 1.5 %	± 3 %
Non-linearity (100 to 1000 W/m^2)	± 0.5 %	± 1 %	± 3 %
Directional response	± 10 W/m^2	± 20 W/m^2	± 30 W/m^2
Spectral selectivity (350 to 1 500 x 10^{-9} m) (WMO 300 to 3 000 x 10^{-9} m)	± 3 %	± 5 %	± 10 %
Temperature response (interval of 50 K)**	2 %	4 %	8 %
Tilt response (0 to 90 ° at 1000 W/m^2)	± 0.5 %	± 2 %	± 5 %
ADDITIONAL WMO SPECIFICATIONS			
WMO CLASS	HIGH QUALITY	GOOD QUALITY	MODERATE QUALITY
WMO: achievable accuracy for daily sums*	2 %	5 %	10 %
WMO: achievable accuracy for hourly sums*	3 %	8 %	20 %
WMO: achievable accuracy for minute sums*	not specified	not specified	not specified
WMO: resolution (smallest detectable change)	1 W/m^2	5 W/m^2	10 W/m^2
CONFORMITY TESTING***			
ISO 9060	individual instrument only: all specs must comply	group compliance	group compliance

* WMO 7.2.1: The estimated uncertainties are based on the following assumptions: (a) instruments are well-maintained, correctly aligned and clean; (b) 1 min and 1 h figures are for clear-sky irradiances at solar noon; (c) daily exposure values are for clear days at mid-latitudes. WMO 7.3.2.5: Table 7.5 lists the expected maximum deviation from the true value, excluding calibration errors.
** At Hukseflux the expression ± 1 % is used instead of a range of 2 %.
*** an instrument is subject to conformity testing of its specifications. Depending on the classification, conformity compliance can be proven either by group- or individual compliance. A specification is fulfilled if the mean value of the respective test result does not exceed the corresponding limiting value of the specification for the specific category of instrument.

9.8 Appendix on definition of pyranometer specifications

Table 9.8.1 *Definition of pyranometer specifications*

SPECIFICATION	DEFINITION	SOURCE
Response time (95 %)	time for 95 % response. The time interval between the instant when a stimulus is subjected to a specified abrupt change and the instant when the response reaches and remains within specified limits around its final steady value.The response time is a measure of the thermal inertia inherent in the stabilization period for a final reading.	ISO 9060-1990 WMO 1.6.3
Zero offset a: (200 W/m^2 net thermal radiation)	response to 200 W/m^2 net thermal radiation (ventilated). Hukseflux assumes that unventilated instruments have to specify the zero-offset in unventilated – worst case – conditions. Zero offsets are a measure of the stability of the zero-point. Zero offset a is visible at night as a negative offset, the instrument dome irradiates in the far infra red to the relatively cold sky. This causes the dome to cool down. The pyranometer sensor irradiates to the relatively cool dome, causing a negative offset. Zero offset a is also assumed to be present during daytime.	ISO 9060-1990
Zero offset b: (5 K/h in ambient temperature)	response to 5 K/h change in ambient temperature. Zero offsets are a measure of the stability of the zero-point.	ISO 9060-1990
Non-stability (change per year)	percentage change in sensitivity per year. The dependence of sensitivity resulting from ageing effects which is a measure of the long-term stability.	ISO 9060-1990
Non-linearity (100 to 1000 W/m^2)	percentage deviation from the sensitivity at 500 W/m^2 due to the change in irradiance within the range of 100 W/m^2 to 1000 W/m^2. Non-linearity has an overlap with directional response, and therefore should be handled with care in uncertainty evaluation.	ISO 9060-1990
Directional response	the range of errors caused by assuming that the normal incidence sensitivity is valid for all directions when measuring from any direction a beam radiation whose normal incidence irradiance is 1000 W/m^2 . Directional response is a measure of the deviations from the ideal "cosine behaviour" and its azimuthal variation.	ISO 9060-1990
Spectral selectivity (350 to 1500 x 10^{-9} m) (WMO 300 to 3000 x 10^{-9} m)	percentage deviation of the product of spectral absorptance and spectral transmittance from the corresponding mean within 350 x 10^{-9} m to 1500 x 10^{-9} m and the spectral distribution of irradiance. Spectral selectivity is a measure of the spectral selectivity of the sensitivity.	ISO 9060-1990
Temperature response (interval of 50 K)	percentage deviation of the sensitivity due to change in ambient temperature within an interval of 50 K the temperature of the pyranometer body.	ISO 9060-1990
Tilt response (0° to 90° at 1000 W/m^2)	percentage deviation from the sensitivity at 0° tilt (horizontal) due to change in tilt from 0° to 90° at 1000 W/m^2 irradiance. Tilt response describes changes of the sensitivity due to changes of the tilt angle of the receiving surface.	ISO 9060-1990
Sensitivity	the change in the response of a measuring instrument divided by the corresponding change in the stimulus.	WMO 1.6.3
Spectral range	the spectral range of radiation to which the instrument is sensitive. For a normal pyranometer this should be in the 0.3 to 3 x 10^{-6} m range. Some pyranometers with coloured glass domes have a limited spectral range.	Hukseflux

9.9 Appendix on terminology / glossary

Table 9.9.1 *Definitions and references of used terms*

TERM	DEFINITION (REFERENCE)
Solar energy or solar radiation	solar energy is the electromagnetic energy emitted by the sun. Solar energy is also called solar radiation and shortwave radiation. The solar radiation incident on the top of the terrestrial atmosphere is called extra-terrestrial solar radiation; 97 % of which is confined to the spectral range of 290 to 3 000 x 10^{-9} m. Part of the extra-terrestrial solar radiation penetrates the atmosphere and directly reaches the earth's surface, while part of it is scattered and / or absorbed by the gas molecules, aerosol particles, cloud droplets and cloud crystals in the atmosphere. The former is the direct component, the latter is the diffuse component of the solar radiation. (ref: WMO, Hukseflux)
Hemispherical solar radiation	solar radiation received by a plane surface from a 180° field of view angle (solid angle of 2 π sr).(ref: ISO 9060)
Global solar radiation	the solar radiation received from a 180° field of view angle on a horizontal surface is referred to as global radiation. Also called GHI. This includes radiation received directly from the solid angle of the sun's disc, as well as diffuse sky radiation that has been scattered in traversing the atmosphere. (ref: WMO) Hemispherical solar radiation received by a horizontal plane surface. (ref: ISO 9060)
Plane-of-array irradiance	also POA: hemispherical solar irradiance in the plane of a PV array. (ref: ASTM E2848-11 / IEC 61724)
Direct solar radiation	radiation received from a small solid angle centred on the sun's disc, on a given plane. (ref: ISO 9060)
Terrestrial or Longwave radiation	radiation not of solar origin but of terrestrial and atmospheric origin and having longer wavelengths (3 000 to 100 000 x 10^{-9} m). In case of downwelling $E_l \downarrow$ also the background radiation from the universe is involved, passing through the "atmospheric window". In case of upwelling $E_l \uparrow$, composed of long-wave electromagnetic energy emitted by the earth's surface and by the gases, aerosols and clouds of the atmosphere; it is also partly absorbed within the atmosphere. For a temperature of 300 K, 99.99 % of the power of the terrestrial radiation has a wavelength longer than 3 000 x 10^{-9} m and about 99 per cent longer than 5 000 x 10^{-9} m. For lower temperatures, the spectrum shifts to longer wavelengths. (ref: WMO)
World Radiometric Reference (WRR)	measurement standard representing the SI unit of irradiance with an uncertainty of less than ± 0.3 % (see the WMO Guide to Meteorological Instruments and Methods of Observation, 1983, subclause 9.1.3). The reference was adopted by the World Meteorological Organization (WMO) and has been in effect since 1 July 1980. (ref: ISO 9060)
Albedo	ratio of reflected and incoming solar radiation. Dimensionless number that varies between 0 and 1. Typical albedo values are: < 0.1 for water, from 0.1 for wet soils to 0.5 for dry sand, from 0.1 to 0.4 for vegetation, up to 0.9 for fresh snow.
Angle of incidence	angle of radiation relative to the sensor measured from normal incidence (varies from 0° to 90°).
Zenith angle	angle of incidence of radiation, relative to zenith. Equals angle of incidence for horizontally mounted instruments
Azimuth angle	angle of incidence of radiation, projected in the plane of the sensor surface. Varies from 0 ° to 360 °. 0 is by definition the cable exit direction, also called north, east is + 90 °. (ASTM G113-09)
Sunshine duration	sunshine duration during a given period is defined as the sum of that sub-period for which the direct solar irradiance exceeds 120 W/m^2. (ref: WMO)

9.10 Appendix on floating point format conversion

For efficient use of microcontroller capacity some registers in the SR05 contain data in a *float or floating point* format. In fact, a floating point is an approximation of a real number represented by a number of significant digits (*mantissa*) and an exponent. For implementation of the floating point numbers, Hukseflux follows the IEEE 754 standard. In this example the floating point of register 41 and 42 is converted to the decimal value it represents. In the Sensor Manager software and other Modbus tools, floating point data will be converted to decimal data automatically.

Example of the calculation of register 41 + 42 representing a floating point for the sensitivity of the sensor, which is 15.14:

Data in register 41, 16754 (MSW)
Data in register 42, 15729 (LSW)
Double word:
$(MSW \times 2^{16}) + LSW$ so: $(16754 \times 2^{16}) + 15729 = 1098005873$

According to IEEE 754:
Sign bit:
$1098005873 < 2147483647$ so: sign bit = 1;
The number 2147483647 is defined by IEEE 754

Exponent:
$1098005873 / 2^{23} = 130$ (digits after the decimal point are ignored)
$130 - 127 = 3$ so: exponent = 3;
The number 127 is a constant defined by IEEE 754

Mantissa:
$130 \times 2^{23} = 1090519040$
$1098005873 - 1090519040 = 7486833$
$7486833 / 2^{23} = 0.8925$
According to IEEE 754, 1 has to be added to get mantissa
$0.8925 + 1 = 1.8925$ so: mantissa = 1.8925

Calculation of floating point:
$float = sign\ bit \times mantissa \times (2^{exponent}) = 1 \times 1.8925 \times 2^3 = 15.14$
so: floating point = 15.14

9.11 Appendix on function codes, register and coil overview

Table 9.11.1 *Supported Modbus function codes*

SUPPORTED MODBUS FUNCTION CODES	
FUNCTION CODE (HEX)	**DESCRIPTION**
0x01	Read Coils
0x02	Read Discrete Inputs
0x03	Read Holding Registers
0x04	Read Input Register
0x05	Write Single Coil
0x06	Write Single Holding Register
0x0F	Write Multiple Coils
0x10	Write Multiple Registers



Your data request may need an offset of +1 for each SR05 register number, depending on processing by the network master. Example: SR05 register number 7 + master offset = 7 + 1 = master register number 8. Consult the manual of the device acting as the local master.

Table 9.11.2 *Modbus registers 0 to 82*

MODBUS REGISTERS 0 - 82				
REGISTER ADDRESS	**PARAMETER**	**DESCRIPTION OF CONTENT**	**TYPE OF**	**FORMAT OF DATA**
0	Modbus address	Sensor address in Modbus network, default = 1	R/W	U16
1	Serial communication settings	Sets the serial communication, default = 5	R/W	U16
2 + 3	Irradiance	signal in x 0.01 W/m²	R	S32
4 + 5	Factory use only			
6	Sensor body temperature	In x 0.01 ˚C	R	S16
7	Sensor electrical resistance	In x 0.1 Ω	R	U16
8	Scaling factor irradiance	Default = 100	R	U16
9	Scaling factor temperature	Default = 100	R	U16
10 + 11	Sensor voltage output	In x 10^{-9} V	R	S32
12 to 31	Factory use only			
32 to 35	Sensor model	Part one of sensor description	R	String

36 to 39	Sensor model	Part two of sensor description	R	String

MODBUS REGISTERS 0 – 82, continued				
REGISTER ADDRESS	**PARAMETER**	**DESCRIPTION OF CONTENT**	**TYPE OF**	**FORMAT OF DATA**
40	Sensor serial number		R	U16
41 + 42	Sensor sensitivity	In x 10^{-6} V/(W/m^2)	R	Float
43	Response time	In x 0.1 s	R	U16
44	Sensor resistance	In x 0.1 Ω	R	U16
45	Reserved	Always 0	R	U16
46 + 47	Sensor calibration date	Calibration date of the sensor in YYYYMMDD	R	U32
48 to 60	Factory use			
61	Firmware version		R	U16
62	Hardware version		R	U16
63 + 64	Sensor sensitivity history 1	In x 10^{-6} V/(W/m^2) Default value is 0	R	Float
65 + 66	Calibration date history 1	Former calibration date of the sensor in YYYYMMDD Default value is 0	R	U32
67 + 68	Sensor sensitivity history 2	See register 63 +64	R	Float
69 + 70	Calibration date history 2	See register 65 + 66	R	U32
71 + 72	Sensor sensitivity history 3	See register 63 + 64	R	Float
73 + 74	Calibration date history 3	See register 65 + 66	R	U32
75 + 76	Sensor sensitivity history 4	See register 63 + 64	R	Float
77 + 78	Calibration date history 4	See register 65 + 66	R	U32
79 + 80	Sensor sensitivity history 5	See register 63 + 64	R	Float
81 + 82	Calibration date history 5	See register 65 + 66	R	U32

Note 1: Up to five 16 bit registers can be requested in one request. If requesting six or more registers, use multiple requests.

Please note that if your data request needs an offset of +1 for each SR05 register number, depending on processing by the network master, this offset applies to coils as well. Consult the manual of the device acting as the local master.

Table 9.11.3 *Coils*

COILS				
COIL	**PARAMETER**	**DESCRIPTION**	**TYPE OF**	**OBJECT TYPE**
0	Restart	Restart the sensor	W	Single bit
1	Reserved			
2	Check	Measure sensor electrical resistance	W	Single bit

9.12 Appendix on finding the sensor model name in the register

Table 9.12.1 *Modbus registers 32 to 39, sensor model name*

MODBUS REGISTERS 32-62				
REGISTER ADDRESS	**PARAMETER**	**DESCRIPTION OF CONTENT**	**TYPE OF**	**FORMAT OF DATA**
32 to 35	Sensor model	Part one of sensor description	R	String
36 to 39	Sensor model	Part two of sensor description	R	String

Registers 32 to 39 will return 8 numbers which can be decoded to find the sensor model name. There are two methods: A and B. SR05-D1A3 sensors with serial number 3819 or higher and SR05-D2A2 sensors with serial number 3524 or higher use method A for storing the name in this register. Sensors with lower serial numbers than these (mostly SR05-DA1 and SR05-DA2 sensors) use method B.

Method A: The 8 numbers (16 bit word or two bytes) are translated to ASCII characters in the following manner. The least significant byte (LSB) of each number corresponds to the first ASCII character and the most significant byte (MSB) corresponds to the first ASCII character in this register location. The following table illustrates this encoding:

Table 9.12.1 Method A sensor model name encoding

REGISTER NUMBER	**32**	**33**	**34**	**35**	**36**	**37**	**38**	**39**
Hexadecimal	[52][53]	[35][30]	[44][2D]	[41][31]	[00][33]	[00][00]	[00][00]	[00][00]
MSB	[52]	[35]	[44]	[41]	[00]	[00]	[00]	[00]
LSB	[53]	[30]	[2D]	[31]	[33]	[00]	[00]	[00]
ASCII	SR	05	-D	1A	3			

Method B: The 8 numbers (16 bit word or two bytes) are translated to ASCII characters in the following manner. The least significant byte (LSB) corresponds to the only ASCII character in this register location. The most significant byte (MSB) always equals [00].

Table 9.12.2 Method B sensor model name encoding

REGISTER NUMBER	**32**	**33**	**34**	**35**	**36**	**37**	**38**	**39**
Hexadecimal	[00][53]	[00][52]	[00][30]	[00][35]	[00][2D]	[00][44]	[00][41]	[00][31]
MSB	[00]	[00]	[00]	[00]	[00]	[00]	[00]	[00]
LSB	[53]	[52]	[30]	[35]	[2D]	[44]	[41]	[31]
ASCII	S	R	0	5	-	D	A	1

Note that there is an alternative way to find out what encoding is used by reading register 32 (16 bit word or two bytes) and find the value of the most significant byte (MSB). If this value equals [00] encoding method B is used. If it does not equal [00] method A is used.

Hukseflux
Thermal Sensors

9.13 EU declaration of conformity

CE

We, Hukseflux Thermal Sensors B.V.
Delftechpark 31
2628 XJ Delft
The Netherlands

in accordance with the requirements of the following directives:

2011/65/EU	The Restriction of Hazardous Substances Directive
2014/30/EU	The Electromagnetic Compatibility Directive

hereby declare under our sole responsibility that:

Product models:	SR05-D1A3, SR05-D2A2
Product type:	Pyranometer

have been designed to comply and are in conformity with the relevant sections and applicable requirements of the following standards:

Emission:	IEC/EN 61000-6-1, Class B, RF emission requirements, IEC CISPR11 and EN 55011 Class B requirements
Immunity:	IEC/EN 61000-6-2 and IEC 61326 requirements
Report:	"EMC test SR05-D1A3_d v03012019.pdf", 03 January, 2019 and "EMC test SR05-DA2 v04122015.pdf", 04 December, 2015



Eric HOEKSEMA
Director
Delft
07 December, 2015

© 2023, Hukseflux Thermal Sensors B.V.
www.hukseflux.com

Hukseflux Thermal Sensors B.V. reserves the right to change specifications without notice.

IMT TECHNOLOGY

DATA SHEET

Sensors for Measuring PV Module Temperature

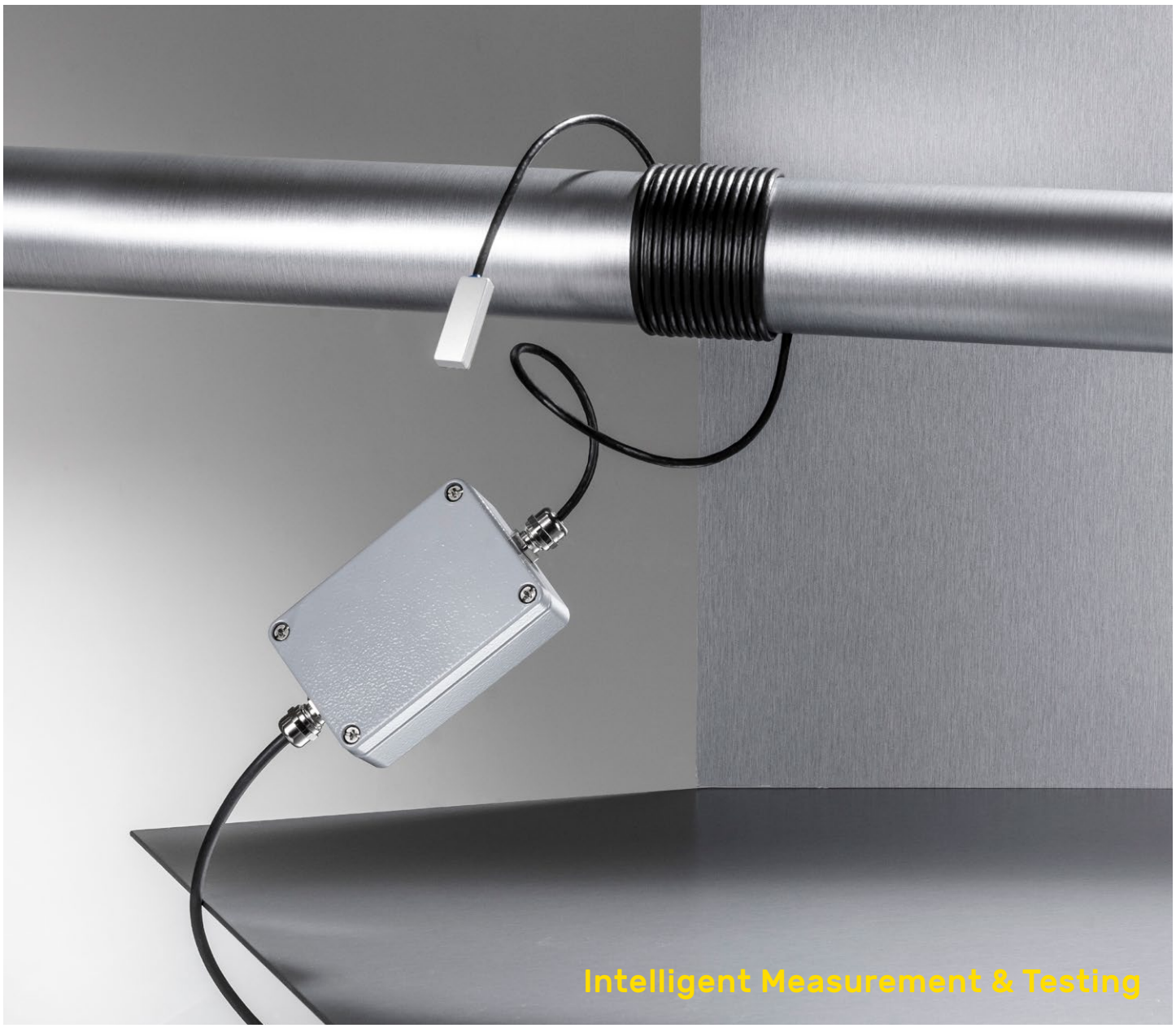

Precise Tracking of the Module Temperature on PV Systems

Measure the temperature of your PV module with utmost precision and minimal drift to assess your system's productivity. Our module temperature sensors are equipped with a sturdy aluminium housing and robust, weatherproof cabling. Thanks to the use of premium components, the sensors achieve high accuracy and are ideal for use in industrial environments and on-site usage (e.g. PV module temperature). The sensor element's compact design also makes it perfect for measuring temperature of bifacial modules.

Benefits & Features

- Sensors comply with all IEC 61724-1 requirements, including for bifacial modules
- Very small sensor element; covers less than 2 % in full size M6 or half-cut M12 cells
- Adhesive's thermal conductivity > 500/m²/K
- Pt1000 precision sensor element as per IEC 60751 Class A[1]
- Sensor element, including extremely adhesive tape for long-term usage
- Highly sturdy aluminium housing[1]
- High-precision measuring electronics including calibration certificate for all active models
- Developed and manufactured in Germany[1]

Sensor Types

Type	Output at -40 to +90 °C	Notes
Tm-RS485-MB	RS485 / MODBUS	–
Tm-I-4090	4 to 20 mA	–
Tm-V-4090	0 to 10 V	–
Tm-Pt1000	Pt1000	–
Tm-Pt1000-box	Pt1000	Including junction box with spring terminals
Tm-Pt100	Pt100	–

Technical Data

All Types (exept Tm-Pt100)

Sensor element	Pt1000 class A as per EN 60751
Sensor housing	Self-adhesive aluminum block, 35 mm x 12 mm x 6 mm
Sensor cable (Pt1000)	PUR sheath, shielded (LiYC11Y, 2 x 0.25 mm²), length: 3 m
Case material	Powder coated aluminium
Operating temperature	Sensor element: -40 to +90 °C, case: -40 to +80 °C
Degree of protection	IP67
Customs tariff number	90 25 19 00

→ For further technical information please see also the instruction manual.

Tm-Pt100

Sensor element	Pt100 class B as per EN 60751
Sensor housing	Self-adhesive silicone rubber Patch, 45 mm x 13 mm x 5 mm
Sensor cable (Pt100)	PTFE sheath, 4 x AWG 30, length: 2 m
Operating temperature	Sensor element: -40 to +90 °C
Customs tariff number	90 25 19 00

→ For further technical information please see also the instruction manual.

Active Temperature Sensors

	Tm-I-4090 **Tm-V-4090**	**Tm-RS485-MB**
		
Measurement uncertainty	1 K at -40 to +80 °C 0.7 K at max. 50 °C case temperature	1 K at -40 to +90 °C
Voltage supply	24 V_{DC} (12 to 28 V_{DC})	24 V_{DC} (10 to 28 V_{DC})
Galvanic insulation	–	1000 V
Connection cable	PUR sheath, shielded (LiYC11Y, 4 x 0.14 mm²)	
Cable length	3 m	6 m
Case size	64 mm x 58 mm x 34 mm	98 mm x 64 mm x 34 mm
Weight	350 g	500 g

Passive Temperature Sensors			
	Tm-Pt1000	**Tm-Pt1000-box**	**Tm-Pt100**
			
Measurement uncertainty	0.35 K at -40 to +90 °C		0.75 K at -40 to +90 °C
Electrical connection	Wires of sensor cable	Spring terminals	Wires of sensor cable
Case size	–	64 mm x 58 mm x 34 mm	–
Weight	70 g	240 g	35 g

Accessories

Junction box set	JB-01	Junction box with cable glands and spring terminals

→ See also data sheet of accessories for further technical information.

Scope of Delivery

All types	Instruction manual
	Calibration certificate (not for Tm-Pt1000, Tm-Pt1000-box, Tm-Pt100)

1 Tm-Pt100

IMT Technology GmbH
Schwarzer Weg 43A
31789 Hameln, Germany

T +49 5151 403699-0
F +49 5151 403699-19
E info@imt-technology.com

© IMT Technology GmbH
Date: June 2024
Errors and changes excepted

valmont



Description of the agri-trackers of Barcelona and Bolzano demonstrators

Abbreviations

Abbreviations	Definitions
CU	Conversion Unit: portion of the plant belonging to the same ground network. Usually, it collides with a subfield.
DS	Switchboard to supply tracker actuator, where is housed a network Industrial switch and a 6-port RS-232/422/485 Serial Device Server.
GUI	Graphical User Interface: the software's
IPC	Industrial personal computer
IT	Information Technologies
PV	Photovoltaic
PS	Power Switchboard. It supplied the tracker actuators within the subfield.
QCC	Switchboard where is housed in the main tracker (second level SCADA) Server and allows access to HMI (optional). Each QCC could manage about 5MWp without any additional QP.
QP	Switchboard where is housed a network Industrial switch and a 4-port RS-232/422/485 Serial Device Servers.
RM	Resource Manager
SCADA	Supervision Control and Data Acquisition system
SF	Subfield: where all trackers are under the same snow and wind strategies and ground network.
SW	Software
TK	Tracker Kit is the mechanical component kit for tracker movement
TRJ-AI	Convert Tracker Control System™ software
TRK	Single-axis tracker
TSS	TRACKER SCADA SYSTEM

1. Background

As the Symbiosyst project, two different trackers were developed for AgriPV applications by Convert, tailored to the needs of the two Demo plants in the project: Demo in Bolzano and Demo in Barcelona.

The two trackers developed are different in terms of the track frame, while they are completely similar in terms of the mechanical handling part, the power supply system, the control system and the weather sensors.

More in detail:

- the structure of both trackers are completely innovative in shape and in many design solutions,
- the part concerning movement, power supply and control, refers to solutions already used to some extent by Convert in its standard trackers.

Therefore, bellow are reported:

- the technical data sheets of the two steel structures respectively trackers for Bolzano demo and Barcelona demo.
- The technical data sheets of all other components of the two trackers, which as indicated are the same in both cases.

2 . Main components of the power/control system.

The Convert power supply, movement control and handling is a system composed of many different devices:

1. QCC or Central Control Switchboard: it is the control unit (PLC) embedding all the functions that allow the monitoring and the control of the entire solar power plant **(SCADA)**.
2. QP or Remote Switchboard: it is a local unit that acts as an extension of the QCC, enabling to add additional weather sensors and/or to control one or more subfields.
3. PS or Power Switchboard: It is connected to LV or auxiliary transformers and is responsible to supply all the DS within the subfield.
4. DS or Distribution Switchboard: it is supplied by the PS and is responsible to supply the power and the communication to all the actuators connected to it.
5. Sensors: provide useful information and enable to set strategies for the safety of the entire system and optimal tracking.
6. Accessories: their existence depend on the PV plant requirements. For instance, whether wireless antenna (WLAN) are optional devices, they may become mandatory for a specific architecture, used for redundancy in case fiber optic is in use or to reach isolated portions of a plant.

MAIN (QCC) / REMOTE (QP) UNIT SWITCHBOARD



POWER SWITCHBOARD



DISTRIBUTION SWITCHBOARD

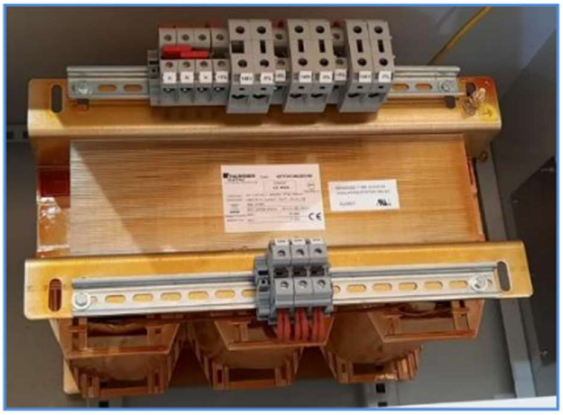

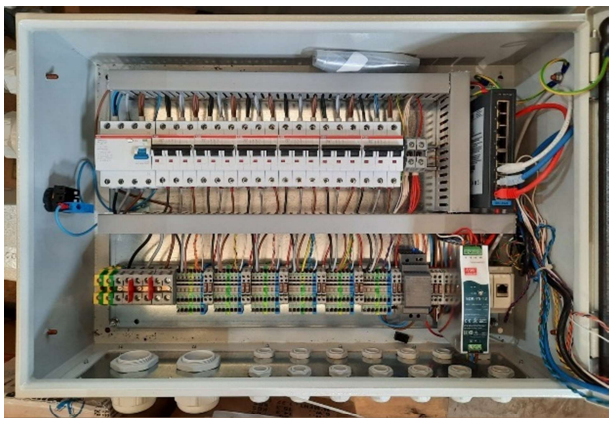

THREE-PHASE LINEAR ACTUATOR

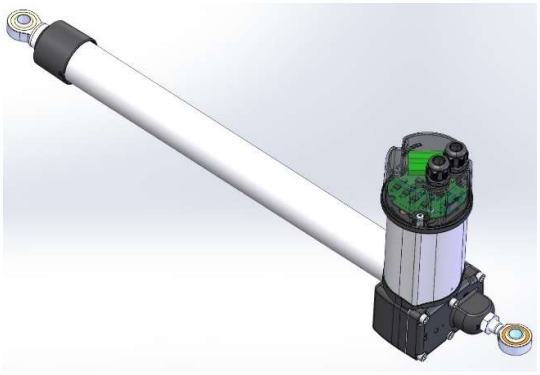

ELECTRONIC CONTROL BOARD

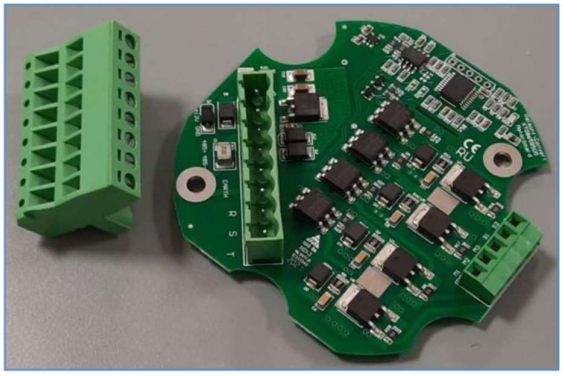

8-cores cable with conductors' colour.



GPS

IRRADIANCE SENSOR (PYRANOMETER)



SNOW SENSOR



ULTRASONIC WIND SENSOR



ANEMOMETER (WIND SPEED SENSOR)



ANEMOSCOPE (WIND DIRECTION SENSOR)



WLAN MAIN UNIT (OMNI) WITH ACCESS POINT



WLAN REMOTE UNIT (NANOSTATION)



All device respect the following guideline:

- **1993/68/EEC Directive of Council of the European Communities** dated July 22nd, 1993, and related to CE marking
- **2006/42/CE Directive of European Parliament** dated May 17th, 2006, related to machines
- **2006/95/CE Directive** on the approximation of the laws of the Member States relating to electrical equipment intended to be used within certain voltage limits
- **2004/108/CE Directive** on the approximation of the laws of the Member States relating to electromagnetic compatibility
- **2012/19/UE RAEE** Directive related to the waste of electrical and electronic equipment Identification Label

3 .DATASHEETS of power/control system componets.

SCADA QCC

TECHNICAL SPECIICATIONS	
Voltage	120 – 240 Vac +-10%
Frequency	50/60 Hz +-5%
Power Supply	1Phase + Neutral + Ground or 2Phase + Ground
Rated Current	2 A
Power Factor	0.6-1
Insulation Voltage	1000 Vac

COMMUNICATION
N°2 standard RS485 ports with additional stabilized 24Vdc power supply for tracker wireless system
N°2 standard RS485 ports with additional NOT stabilized 24Vdc power supply for wind speed and direction sensors
N°1 standard RS485 ports with additional stabilized 12Vdc power supply for snow sensor
N°1 standard RS232 port with additional stabilized 5Vdc power supply for GPS device
N°1 ethernet LAN port for an external internet connection
N°1 ethernet LAN port for an internal LAN connection with the plant QPs. An internal POE 24Vdc is integrated in the port to power the PLANT Wi-Fi connection.
N° 1 sun sensor port
Control interface to connect up to 40 tracker control boxes with up to 400 tracker axes

ACTUATOR

TECHNICAL SPECIICATIONS	
Thrust Load	20 kN
Mid-stroke static load limit	60 kN
Stroke	410mm
Speed	Max 1.75 mm/s
Voltage AC	148Vac ± 5%
Rated Frequency	50-60 Hz
Protection grade	IP 65
Thermal protection	Built-in thermal switch. Operating time 400s at 230 V / 5060 Hz – 20 °C
Configuration	Symmetrical three-phase induction actuator
Max. Current	0.85 A (60 kN)
Max. Power	130 W / 262 VA at 148V / 50-60 Hz
Nominal power	217 VA / 435 VA at 148V / 50-60 Hz

ELECTRONIC CONTROL BOARD

INPUT	
AC Voltage	DC Voltage
148 Vac ± 10%	12 Vdc ± 10%
50-60 Hz ± 5%	
Type 3P + G	
Nominal current 0.8 A	Nominal Current 20 mA
Integrated over-temperature protection	

LINEAR ACTUATOR CONTROL OUTPUT
Three-phase electric actuator driver

COMMUNICATION
RS485 Transceiver

FAILURE ALERTS
Status signal via n° 4 LED integrated on the board

OTHER CHARACTERISTICS
Micro controller unit 32 bits – 100 MHz – 512 kb flash
Static actuator driver controller
MTBF 500’000 hours

MECHANICAL CHARACTERISTICS
Diameter 90mm
Diameter 90 mm

ENVIRONMENTAL OPERATING CONDITIONS
Operating temperature -30 ÷ 85 °C
Max. operating altitude < 2000m asl

8-CORES CABLE FOR LINEAR ACTUATOR

TECHNICAL SPECIFICATIONS	
Type	Multipolar
Construction	Multipolar + outer sheath (Black)
Nominal size	4 x 1.0 mm^2 + 4 x 0.5 mm^2
Conductor	Flexible bar copper class 5 CEI EN 60228
Nominal conductor construction	Size 1.5mm: 28 wires x Φ 0.25mm Size 0.5mm: 16 wires x Φ 0.2mm
Max conductor resistance at 20 °C	Size 1.5mm: 13.3 Ohm/km Size 0.5mm: 39.0 Ohm/km
Average insulation thickness	Size 1.5mm: 0.7 mm Size 0.5mm: 0.7 mm
Core outer diameter	Size 1.5mm: 2.9 ± 0.1 mm Size 0.5mm: 2.3 ± 0.1 mm
Sheath material	PVC thermoplastic compound type DMV18 U.V. resistant according to HD605
Outer cable diameter	Max. 13 mm
Rated voltage U_o/U	0.45 / 0.75 kV
Max. operating temperature (on the conductor)	-40 ÷ 80 °C
Cable laying conditions	Cable duct without underground joints

POWER SWITCHBOARD

INPUT
Voltage 800/660/400 Vac ± 5%
Frequency 50 Hz ± 5%; 60Hz ± 5%
Type 3 P + G
Nominal power absorption 50 kVA Maximum power absorption 40 kVA / 60 kVA
Isolated
Integrated over-current protection

OUTPUT
8 x Three-Phase voltage outputs for Convert equipment
1 x Single-Phase voltage output for Convert equipment
Integrated over-current protection
Each power output provides power up to 2 Convert Distribution Switchboards
Each power output provides power up to 600 Convert Tracker Actuators

MECHANICAL CHARACTERISTICS
Cable entries from the side
Box size 610 x 460 x 720 (h) mm
Weight about 180 kg
Protection degree IP44 (box)
Cable entries from the side
Box size 610 x 460 x 720 (h) mm

ENVIRONMENTAL OPERATING CONDITIONS
Operating temperature -30°C ÷ +50°C
Storage temperature -20°C ÷ 60°C
Max. operating altitude < 2000m asl
Natural cooling without external air exchange

POWER SWITCHBOARD PROTECTION BOX

INPUT
Voltage: 800/660/400 Vac ± 5% / 148Vac ± 5%
Frequency 50 Hz ± 5%; 60Hz ± 5%
Type 3-phase + Ground
Nominal current: 46A
Icu: 6kA
Integrated over-voltage protection
Protection degree: IP65
Wall mounted
Cable entry: from the bottom

MAIN COMPONENTS
Metalic box 600x400x200 mm
Fuse holder 1000Vac 22x65mm
Circuit breaker 3x125 A
Fuse holder 600Vac 10x38mm

INPUT
Type: Fuses
Fuse holder 1000Vac 22x65mm
DIN rail 7,5x35mm mounting
Rated Voltage 1000Vac – 1500Vdc
Rated Current: 100A
SC withstand (SCCR): 50kA

DISTRIBUTION SWITCHBOARD

INPUT
Customized voltage supplied by Power Switchboard or through Smart Power technology
Frequency 50 Hz ± 5%; 60Hz ± 5%
Type 3 P + G
Nominal current 14 A
Power factor 0.4-1
Integrated over-voltage protection
Customized voltage supplied by Power Switchboard

OUTPUT
Up to N°8 power output to control up to 80 actuators
For each output up to10 actuators be connected in daisy chain

LINEAR ACTUATOR CONNECTION BUS
Up to N° 4 RS485 transceiver
Integrated over-voltage protection according to IEC 61000-4-5 Surge 1kV
Electrical insulation 1.5kV

FAILURE ALERTS
Status signal via n°4 LED integrated on the board
Complete alarm signaling to the CONVERT TRJ-AI Scada System

ETHERNET INTERFACE
N. 2 bus connectors (in/out) for a daisy chain connection up to 6 distribution switchboards
TCP-IP communication protocol with the CONVERT TRJ-AI Scada System

WIRELESS OPTION
The ethernet cable can be replaced by a wireless link
5GHz wi-fi link between the distribution switchboard and the Convert Scada QCC in the substation
The ethernet cable can be replaced by a wireless link

OTHER CHARACTERISTICS
Micro controller unit 32 bit – 100 MHz – 512 kB flash
Static actuator driver controller
Automatic restart after a power failure
MTBF 500’000 hours

MECHANICAL CHARACTERISTICS
Supporting plate for the connection on the tracker’s pile
Total size 700 x 500 x 300 mm (with sun and rain screen)
Box size 600 x 400 x 200 mm
Weight about 20 kg
Protection degree IP65 (box)

WIND SENSORS

ELECTRICAL FEATURES		
	Anemometer	Anemoscope
Power supply	9-30 Vdc	9-30 Vdc
Maximum current	100 mA	20 mA
Output	RS485	RS485
Output maximum current	100mA	50 mA
MEASUREMENT PERFORMANCE		
Range	3-180 km/h	0-360º
Starting speed	8 km/h	3 km/h
Survival speed	200 km/h	200 km/h
Accuracy	1 km/h (3-15 km/h) 3% (15-180Km/h)	+/-3º
GENERAL FEATURES		
Material	PA + FV	PA+FV / Aluminium
Bearings	Stainless steel X65Cr13	Stainless steel X65Cr13
Type of connection	Cable: 4x0.65mm^2	Cable: 4x0.65mm^2
Cable length	10m	10m
Weight	160 g	170 g
Dimensions	125x139mm	129x190 mm
Storage temperature	-35ºC +80ºC	35ºC +80ºC
Working temperature without ice	-20ºC +70ºC	-20ºC +60ºC
Reference standards	EN 61000-6-2:2001 EN 55022:2001, Class B	EN 61000-6-2:2001 EN 55022:2001, Class B
Protection degree	IP65 (UNE 20324:1993)	IP65 (UNE 20324:1993)

SNOW SENSOR

MEASUREMENT PERFORMANCE			
Measurement range (TNU04)	0.6 ÷ 4 m		
Accuracy	± 1 cm		
Sensibility	0.5 cm		
Beam width at 3DS	12° ± 2°		
WORKING CONDITIONS			
Temperature	-20°C ÷ +65°C		
Humidity	0% ÷ 100%		
OUTPUTS			
RS485-MODBUS	Temperature, height		
Voltage	0 ÷ 2 V ↔ 0 ÷ 5m		
Current	4 ÷ 20 mA ↔ 0 ÷ 5m		
POWER SUPPLY AND CONSUMPTION			
Input voltage	10 ÷ 16 Vdc		
Consumption [mA]	Minimum	Typical	Maximum
RS485 MODBUS/0 ÷ 2 V (TNU04)	-	1	-
RS485 MODBUS/0 ÷ 2 V (TNU08)	1	1.5	-
4 ÷ 20 mA	7	-	30
Capsule drive peak power [W]	14.4		
MECHANICAL CHARACTERISTICS			
Enclosure material	Plastic, ABS, aluminium alloy and inox hardware		
Weight	1.6kg		
Dimensions	210 mm; height 323 mm		
Protection grade	IP67		
Connection	7-poles male		

ULTRASONIC WIND SENSOR

MEASUREMENT PERFORMANCE	
Reporting range	0-76 m/s
Response time	0.25 s
Accuracy	±3 % at 10 m/s
Output resolution	0.1 m/s / 1°
Azimuth	0-360°
Update interval	1 – 3600s, at 1s steps
ELECTRICAL FEATURES	
Operating voltage	6 - 24 V DC (−10 ÷ +30 %)
Heating voltage	DC, AC, or full-wave rectified AC 12 - 24 V DC (−10 ÷ +30 %) 12 - 17 V ACrms (−10 ÷ +30 %)
Typical heating current	12 V DC: 800 mA, 24 V DC: 400 mA
Digital output	RS485
Communication protocol	MODBUS RTU
WORKING CONDITIONS	
Temperature	−52 ÷ 60 °C (−60 ÷ +140 °F)
Humidity	0 ÷ 100 %RH
Pressure	500 ÷ 1100 hPa
Wind	0 ÷ 60 m/s
MECHANICAL CHARACTERISTICS	
Dimensions	141 × 114 mm
Weight	510 g
Materials	Polycarbonate +20 % fiberglass Stainless steel (AISI 316)
Protection degree	IP65
Compliance marks	CE, RCM, RoHS, China RoHS, UKCA
Reference standards	EN 61326-1, industrial environment CISPR 32 / EN 55032, Class B, IEC 60068-2-1, 2, 6, 14, 30, 31, 78 IEC 60529, VDA 621-415, IEC 60945 (Exposed) DNV GL Type Examination Certificate No. TAA00000VF

WLAN MAIN UNIT ANTENNA

TECHNICAL DETAILS
Dimensions (mm): 799x90x65
Weight: 0,82 Kg
Power supply (POE): 24V – 0,5A
Wind Survivability: 200Km/h
Gain: 13 DSi
Operating Frequency: 5,45-5,85 GHz
Cross-pol Isolation: 25 DS minimum
Max. VSWR: 1,5:1
Beamwidth: 7° (Elevation)

WLAN REMOTE UNIT ANTENNA

TECHNICAL DETAILS
Dimensions (mm): 163x31x80
Weight: 0,18 Kg
Power supply (POE): 24V – 0,5A
Max Power consumption: 5,5W
Gain: 13 DSi
Operating Frequency: 5170-5875 MHz
Cross-pol Isolation: 20DS minimum
Max. VSWR: 1,4:1
Beamwidth: 45° (H-Pol)/45° (V-Pol) / 45° (Elevation)

4 . Tracker Barcellona Demo

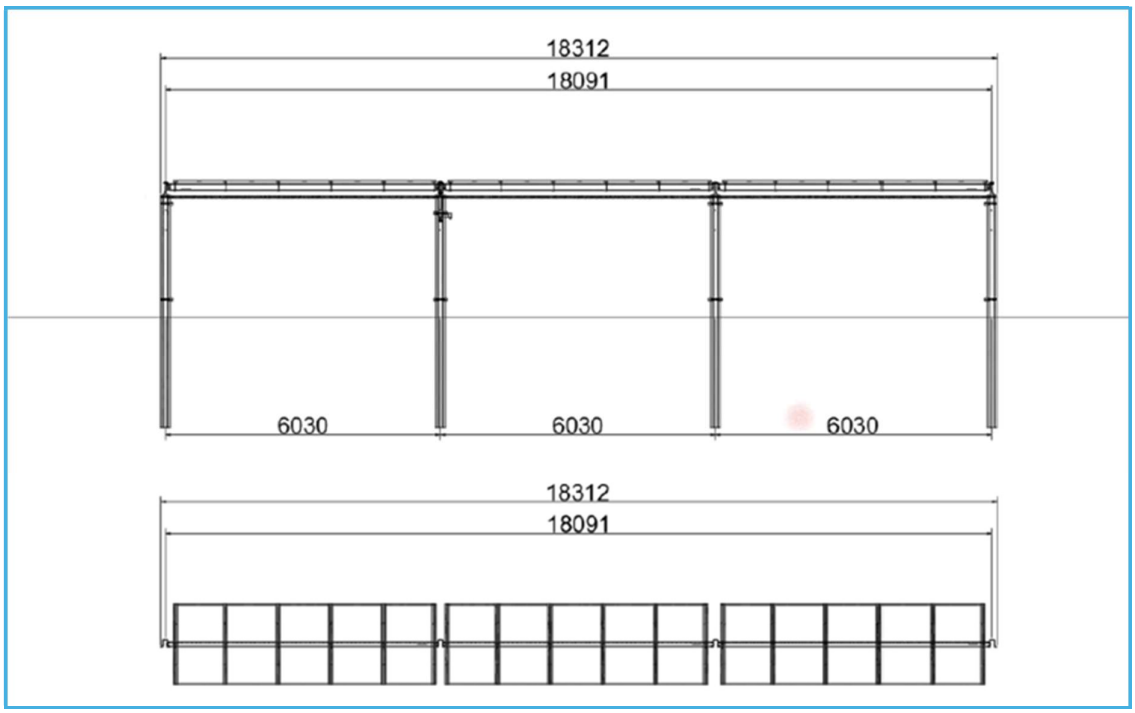

Top and Front View

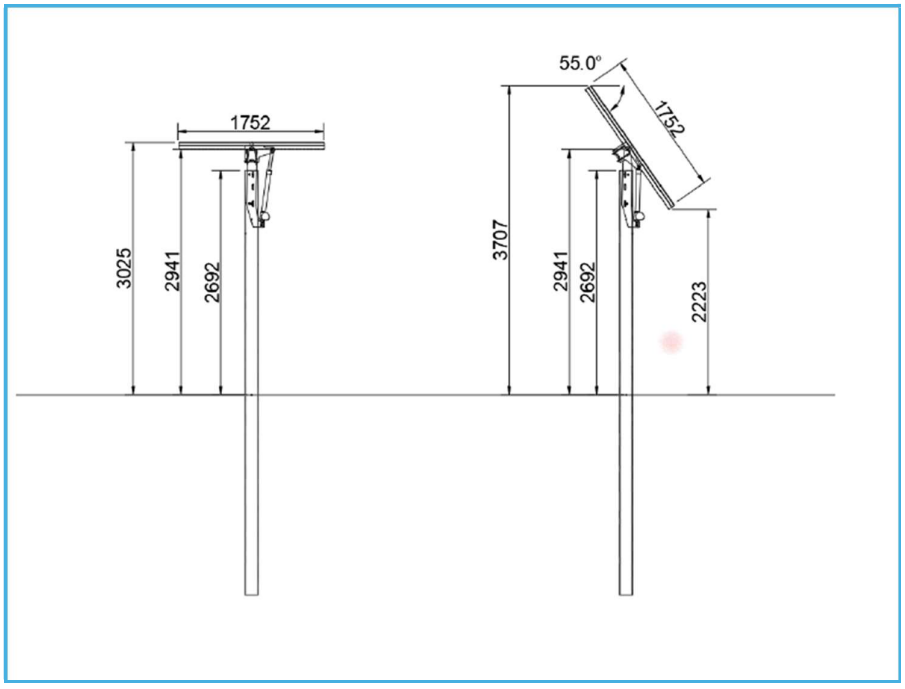

Lateral View

SOLAR TRACKING

Type of tracking system: horizontal single axis tracking system with back-tracking
Axis Tilt 0°
Axis Azimuth 0°
Tracking angle ± 50°
Maximum tracking error ± 2°

DESEGN SPECIFICATIONS

1 x 15 PV-modules in portrait configuration
Dimensions 18.291 m x 1.752 m x 3.5 96 (h Max) / 2.20 (h Min)
Minimum height over ground at maximum tracking angle: 2.20 m
Foundation: 4 driven pile
Photovoltaic area 31.69 m^2
Length of PV area 18.092 m
Foundations piles will be hot dip galvanized according with EN ISO 1461: 80.micron, Other parts will be galvanized according to the environmental constraints: 50 micron, mm
The tracker can be installed by four workers using: lift platform, mechanical crane lift and standard tools and mechanical equipment's for moving single components. No welding or cuttings are planned on site during installation phases
No mechanical transmission components between two tracker. The tracker is completely adaptable to geotechnical condition of site.
Balanced system: rotation axis is located on the center of gravity of the moving part of the structure
Stow position: 0°
Stow position wind conditions: • wind gust 3 sec.: 15,6 m/sec, at a height of 5 m • constant-speed wind. 29 m/sec, at a height of 5 m

DESIGN REFERENCE CODE

-
- EN 1990 (2006) – Basis of structural design
- EN 1991-1-3 (2015): Eurocode 1: Actions on structures - Part 1-3: General actions – snow loads;
- EN 1991-1-4 (2010): Eurocode 1: Actions on structures - Part 1-4: General actions – Wind actions;
- EN 1993-1-1 (2014): Eurocode 3: Design of steel structures - Part 1-1: General rules and rules for buildings;
- EN 1993-1-3 (2007): Eurocode 3: Design of steel structures - Part 1-3: General rules – Supplementary rules for cold-formed members and sheeting;
- EN 1993-1-5 (2017): Eurocode 3: Design of steel structures - Part 1-5: General rules – Plated structural elements;
- EN 1993-1-8 (2017): Eurocode 3: Design of steel structures - Part 1-8: General rules – Design of joints;
- EN 1997-1 (2017): Eurocode 7: Geotechnical design - Part 1: General rules;
- EN 1998-1 (2013): Eurocode 8: Design of structures for earthquake resistance - Part 1: General rules, seismic actions and rules for buildings;
- DB SE- AE (2009): Documento Básico Seguridad Estructural Acciones en la edificación
- NCSE-02 (2004): Norma de Construcción Sismorresistente: Parte general y edificación

5 .Tracker Bolzano Demo

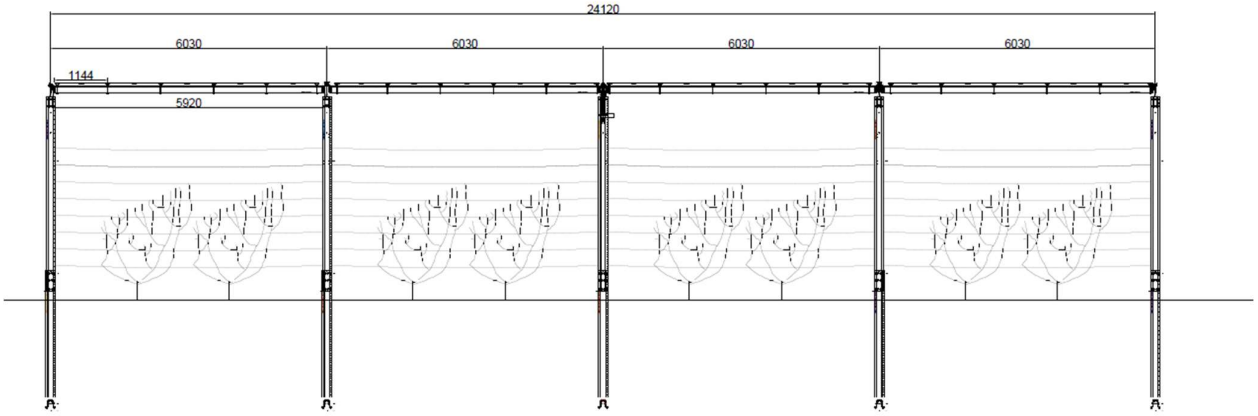

Front View

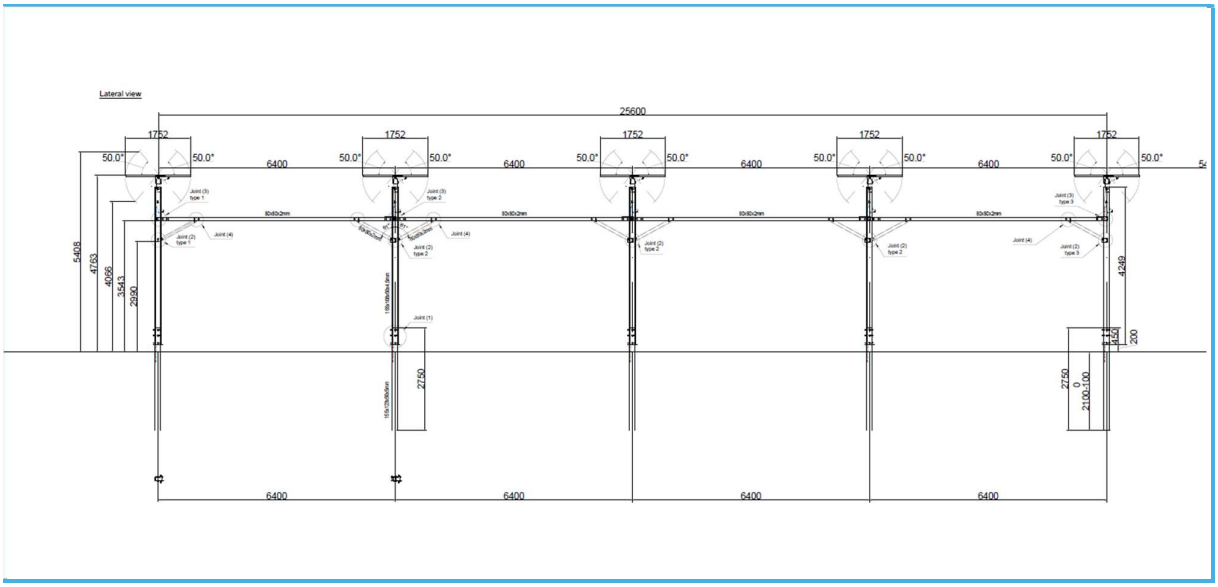

Lateral View

SOLAR TRACKING

Type of tracking system: horizontal single axis tracking system with back-tracking
Axis Tilt 0°
Axis Azimuth 0°
Tracking angle ± 50°
Maximum tracking error ± 2°

DESEGN SPECIFICATIONS

1 x 20 PV-modules in portrait configuration; modulus dimension: 1752x1144x40 mm
Dimensions 24.120 m x 1.752 m x 5.408 (h Max) / 4.763 (h Min)
Minimum free height over ground at maximum tracking angle: 3.543 m
Foundation: 5 driven pile
Rows of trackers connected to each other at poles by beam, a height of 3.5 m.
Photovoltaic area 40,04 m^2
Length of PV area 22,88 m
Foundations piles will be hot dip galvanized according with EN ISO 1461: 80.micron, Other parts are in Weathering Steel
The tracker can be installed by four workers using: lift platform, mechanical crane lift and standard tools and mechanical equipment's for moving single components. No welding or cuttings are planned on site during installation phases
No mechanical transmission components between two tracker. The tracker is completely adaptable to geotechnical condition of site.

Balanced system: rotation axis is located on the center of gravity of the moving part of the structure
Stow position: 0°
Stow position wind Conditions: • wind gust 3 sec.: 15,6 m/sec, at a height of 5 m • constant-speed wind. 29 m/sec, at a height of 5 m

DESIGN REFERENCE CODE

- EN 1990 (2006) – Basis of structural design
- EN 1991-1-3 (2015): Eurocode 1: Actions on structures - Part 1-3: General actions – snow loads;
- EN 1991-1-4 (2010): Eurocode 1: Actions on structures - Part 1-4: General actions – Wind actions;
- EN 1993-1-1 (2014): Eurocode 3: Design of steel structures - Part 1-1: General rules and rules for buildings;
- EN 1993-1-3 (2007): Eurocode 3: Design of steel structures - Part 1-3: General rules – Supplementary rules for cold-formed members and sheeting;
- EN 1993-1-5 (2017): Eurocode 3: Design of steel structures - Part 1-5: General rules – Plated structural elements;
- EN 1993-1-8 (2017): Eurocode 3: Design of steel structures - Part 1-8: General rules – Design of joints;
- EN 1997-1 (2017): Eurocode 7: Geotechnical design - Part 1: General rules;
- EN 1998-1 (2013): Eurocode 8: Design of structures for earthquake resistance - Part 1: General rules, seismic actions and rules for buildings;
- DB SE- AE (2009): Documento Básico Seguridad Estructural Acciones en la edificación
- NCSE-02 (2004): Norma de Construcción Sismorresistente: Parte general y edificación

Centre de Disseny d'Equips Industrials
CDEI - UPC

Symbiosyst

Horizon Europe EU project
Grant Agreement No. 101096352

Autonomous electric robot for data acquisition

Funded by the European Union

Views and opinions expressed are however those of the author(s) only and do not necessarily reflect those of the European Union or CINEA. Neither the European Union nor the granting authority can be held responsible for them.

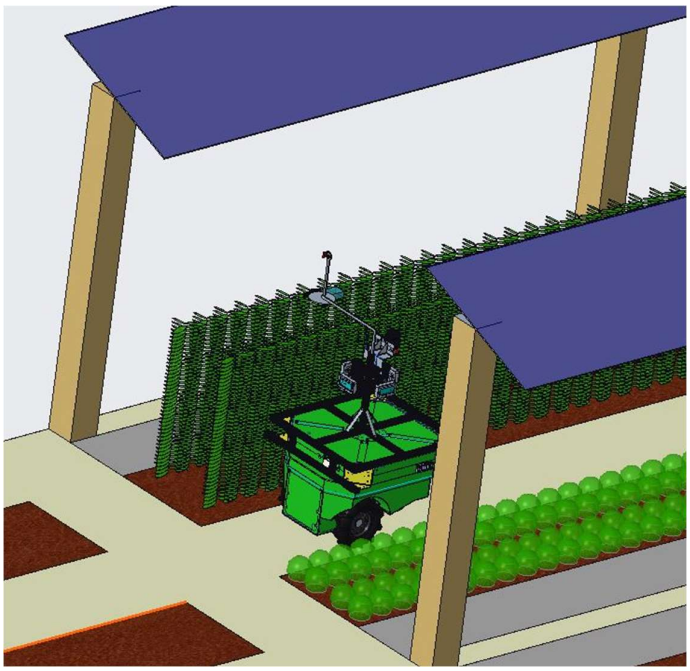

PURPOSE OF THE ROBOT

The SYMBIOSYST robot is a cutting-edge platform designed for agrivoltaic environments. This omnidirectional robotic system is equipped with advanced sensors that enable autonomous navigation in agricultural fields, providing a flexible and sustainable alternative to traditional fixed sensor networks.

The robot collects real-time data on critical crop parameters, including vigor, temperature, and water stress, while also detecting potential overheating in the background of solar panels. This data is transmitted to a decision-making system, allowing dynamic optimization of variables such as the tilt angle of solar panels to balance crop productivity and energy generation effectively.

Built for versatility, the robot is also capable of supporting additional tasks in the field, such as transporting materials and crops. Its modular design allows for future integration of tools for maintenance and field operations, including phytosanitary applications.

This datasheet outlines the robot's technical specifications.

ROBOT'S DESIGN

The robot is built upon a robust and proven design originally developed for logistics applications. This patented, market-ready technology has been carefully adapted to meet the unique challenges of agricultural environments, resulting in a highly versatile and multipurpose robotic platform.

1.1. KINEMATICS

The robot's design integrates two main systems: the mobile platform (chassis) and the rotating plate, which together enable omnidirectional movement. The chassis features two offset, differential-drive conventional wheels that govern its primary movement. This system provides precise control and flexibility in maneuvering through diverse terrains found in agricultural fields. Complementing the chassis is the rotating plate, a key component that can rotate independently relative to the base platform. This rotation enhances the robot's agility, allowing it to perform complex movements and adapt to the demands of agrivoltaic environments.
This kinematic configuration not only ensures smooth navigation but also supports the robot's multipurpose functionality, enabling it to tackle a variety of tasks in modern agriculture.

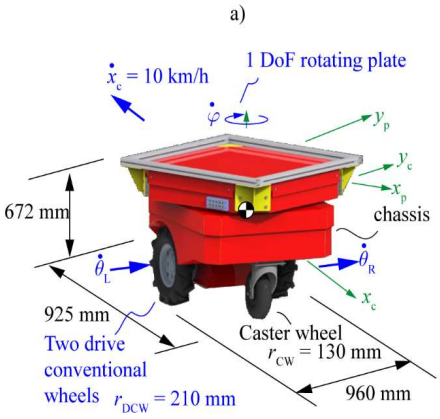

Figure 1 Mobile robotic platform

1.2. DIMMENSIONS

The robot measures 970x970x1500 mm, weighs approximately 300 kg, and can carry loads up to 400 kg. It features 210 mm drive wheels and 130 mm caster wheels, achieving theoretical speeds of up to 10 km/h. Powered by a 48 V, 50 A battery, it offers 8 hours of autonomy.

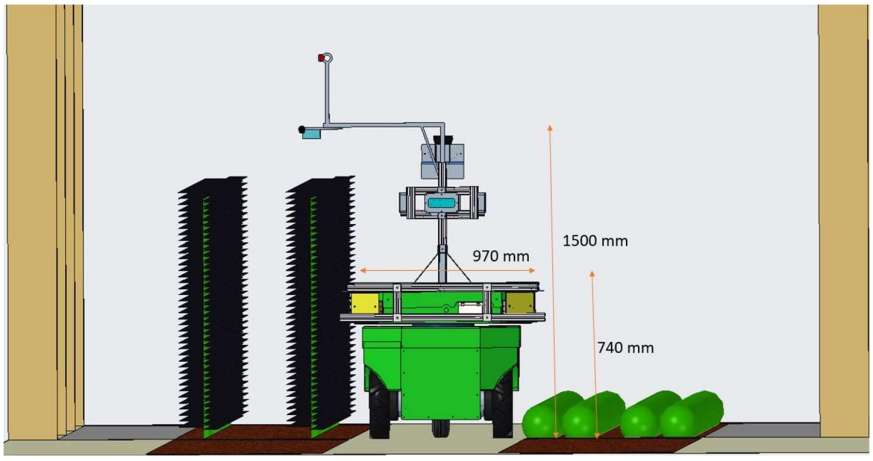

Figure 2 Robot layout in the field.

Table 1 Robot main dimensions and characteristics.

Dimensions	970x970x1500 mm	*Caster wheel radius*	130 mm
Approximate weight	300 kg	*Navigation*	Autonomous-GPS, Lidar, RGB-D, IMU
Maximum load	400 kg	*Communication*	Ethernet, Wifi, 4G
Maximum speed	10 km/h	*Battery*	48 V, 50 A
Drive wheels radius	210 mm	*Autonomy*	8 h

1.3. EQUIPED SENSORS

The robot is equipped with a suite of advanced sensors tailored for data collection and analysis in agricultural environments, ensuring efficient monitoring and decision-making.

Table 2 Sensors equipped on the SYMBIOSYST robot and their main functions

Sensor	Function	Description
Intel RealSense D457 RGB-D Camera	Navigation and plant monitoring	Combines high-resolution RGB imaging and depth sensing to create 3D models, enabling spatial awareness and object detection.
Optris Xi 400 Thermal Camera	Crop and solar panel temperature monitoring	Captures temperature variations to detect water stress in plants (e.g., CWSI) and overheating in photovoltaic panels.
Integrated thermometer	Environmental monitoring	Measures ambient temperature and wet bulb temperature for analyzing environmental conditions.
ACS-211 Crop Circle Sensor	Crop health assessment	Measures plant reflectance at 670 nm and 780 nm to calculate NDVI and 3DNDVI indices for crop vigor and health.
LIDAR (Light Detection and Ranging)	Navigation and mapping	Generates detailed point clouds for precise environmental mapping, navigation, and obstacle avoidance.
IMU (Inertial Measurement Unit)	Navigation stabilization and motion tracking	Provides real-time orientation and motion data by tracking accelerations and rotational velocities.
GNSS (Global Navigation Satellite System)	Geolocation and path tracking	Ensures accurate positioning and heading estimation, optimizing field coverage with RTK corrections when available.

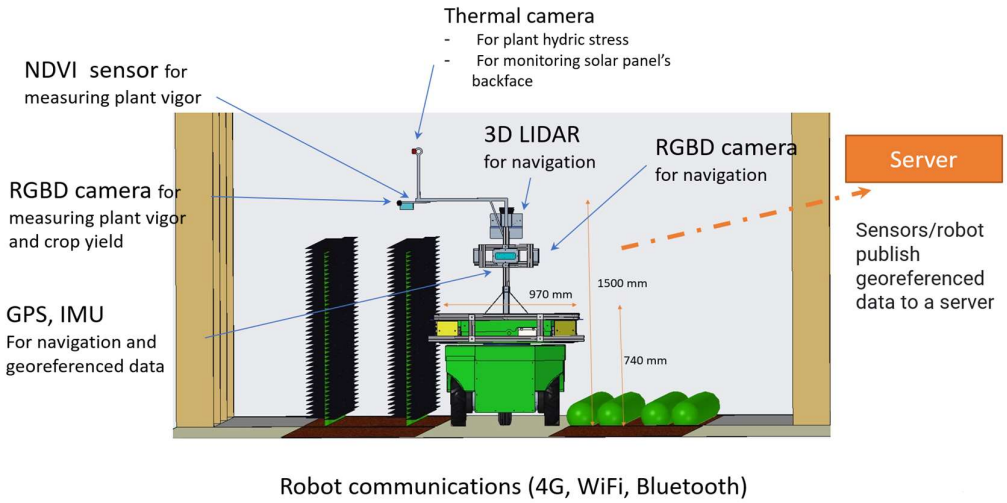

Figure 3 Sensorics system layout.

1.4. NAVIGATION

The robotic system ensures autonomous navigation with precision and efficiency, avoiding obstacles while covering the target area without disturbing crops. The system integrates different sensors described previously. Mapping and localization are achieved using a SLAM algorithm, which fuses data from the LiDAR, IMU, and encoders, generating a detailed map anchored to a GPS-referenced location for global positioning.

To enhance navigation robustness, the system incorporates computer vision via an RGB-D camera. This camera corrects the local costmap, addressing limitations in GPS precision and reliability, especially in agricultural environments with low RTK corrections. By integrating visual data, the system achieves more accurate obstacle detection and trajectory adjustments.

Path planning combines a global planner for route computation and a local controller for real-time trajectory adjustments. These trajectories are seamlessly converted into motor commands for smooth and safe navigation. Safety is ensured through costmaps created from LiDAR and RGB-D camera data, dynamically updating to avoid both static and moving obstacles, guaranteeing reliable operation in challenging agricultural settings.

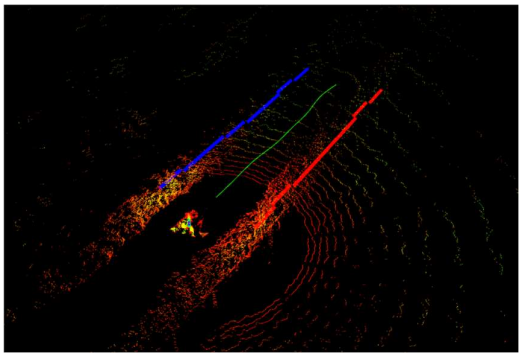

Figure 4 LiDAR-based navigation with trajectory planning visualization.

MONITORING PARAMETERS

The robotic system is equipped with a variety of advanced sensors to monitor critical parameters of plants, the environment, and photovoltaic panels. These measurements provide valuable insights for optimizing crop health, environmental conditions, and the performance of solar panels in agrivoltaic systems. The following table summarizes the monitored parameters and the corresponding sensors used.

Table 3 Monitored parameters

Category	Parameter	Sensor/method	Description
Plant parameters	Crop vigor	ACS-211 Crop Circle sensor	Measures NDVI and 3DNDVI indices to assess plant health and growth.
	Water stress	Optris Xi 400 thermal camera	Detects temperature variations to calculate water stress indices like CWSI.
	Canopy temperature	Optris Xi 400 + Integrated thermometer	Monitors canopy temperature.

	3D structure and growth	Intel RealSense D457 RGB-D camera	Captures depth and color data for canopy height, coverage, and 3D mapping (possibility).
Environmental parameters	Ambient Temperature	Integrated thermometer	Monitors field temperature conditions.
	Humidity	Integrated thermometer	Measures environmental humidity levels.
	Light and shadow Conditions	Intel RealSense D457 RGB-D camera	Detects lighting variations and processes data to identify solar incidence on crops.
PV panel parameters	Surface and junction box temperature	Optris Xi 400 thermal camera	Identifies overheating or faults in panel surfaces or boxes.
	General cleanliness	Intel RealSense D457 RGB-D camera	Identifies dust, debris, or obstructions affecting panel performance (possibility).

ANNEXES - DATASHEETS of the Bolzano demo

R'n'D-modules for SYMBIOSYST Anti Glare 270 W

Premium PV panel

The durable one.
For a green planet.

Type 2

IMPROVED SURFACE
Anti-reflective coating ensures optimum self-cleaning and higher yields.

PACKED FOR SAFE TRANSPORT
Packed upright, avoiding the emergence of microcracks and thus ensuring factory quality at the place of delivery.

MADE IN GERMANY
Right here. In Prenzlau. In our production facility. Here we manufacture under the aspects of quality & durability since 2001.

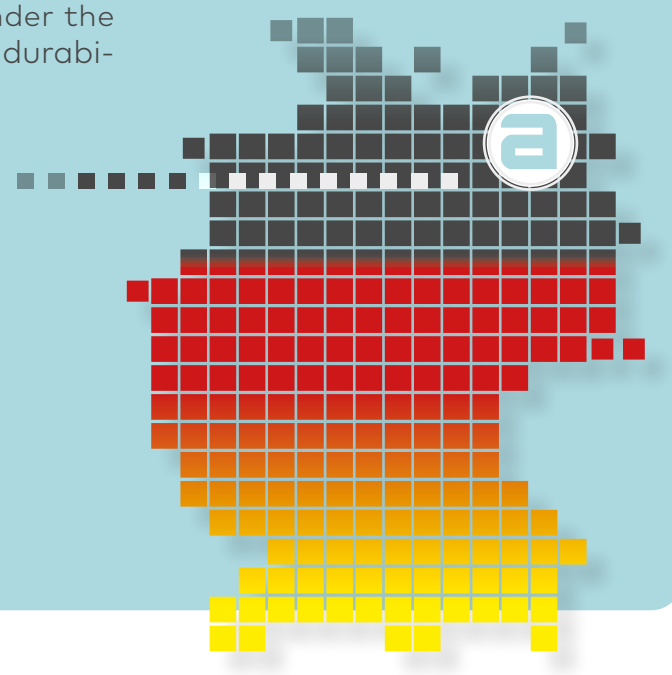

A SUSTAINABLE CHOICE
A premium product, which lasts for decades. Manufactured according to rigid environmental standards. Produced with 100 % green electricity.

QUALITY UNDER HAND AND SEAL

Design optimized with SmartCalc Module

aleo
www.aleo-solar.de

R'n'D-modules for SYMBIOSYST 270 W Premium PV panel

DIMENSIONS [mm]

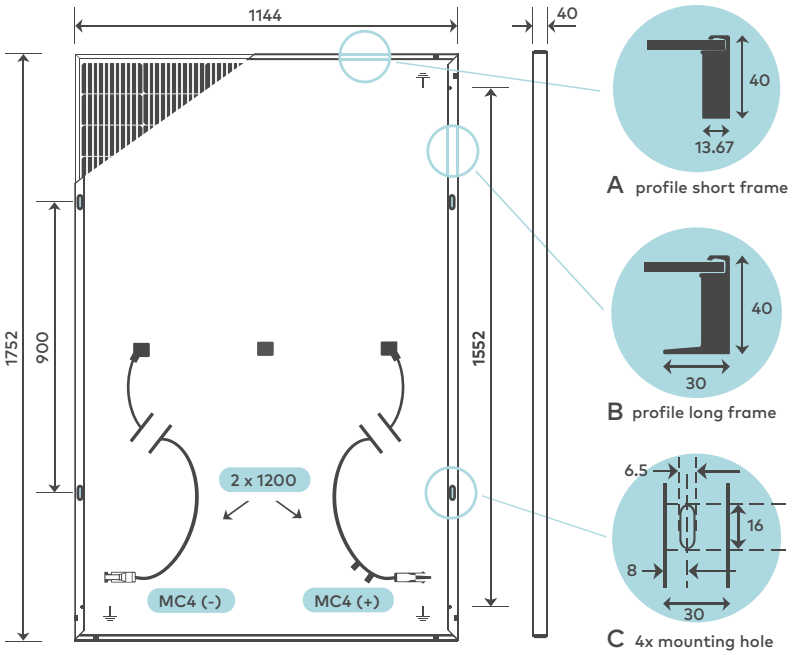

BASIC MODULE DATA

Length x width x height	[mm]	1752 x 1144 x 40
Weight	[kg]	22
Number of cells		72
Cell size	[mm]	182 x 91
Cell material		Monocrystalline Si, PERC
Number of Busbars		10
Front sheet		3.2 mm Solar glass (TSG) with anti-reflective coating
Back sheet		Polymer sheet, transparent
Frame material		Al alloy, black

BASIC DATA JUNCTION BOX

Parts of junction box acc. to IEC 62790	[mm]	left & right: 62 x 58 x 14
Bypass diodes		2 (one per box)
IP class		IP68
Cable	[mm]	1200 (+), 1200 (-) acc. to EN 50618
Connectors		genuine MC4 acc. to EN 62852

ELECTRICAL DATA (STC)

			TYPE 2
Rated power	P_{MPP}	[W]	270
Rated voltage	V_{MPP}	[V]	21.1
Rated current	I_{MPP}	[A]	12.8
Open-circuit voltage	V_{OC}	[V]	25.2
Short-circuit current	I_{SC}	[A]	13.2
Efficiency	η	[%]	13.5

Electrical values measured under standard test conditions (STC): 1000 W/m²; 25 °C; AM 1.5

CLASSIFICATION

Classification range (positive classification)	[W]	0/+9.99

ELECTRICAL DATA (LOW IRRADIANCE)

			TYPE 2
Power	P_{MPP}	[W]	52.4

Electrical values measured under: 200 W/m²; 25 °C; AM 1.5
Measurement tolerance of P_{MPP} under STC -3/+3 %; Accuracy of other electrical values -10/+10 %
Efficiency related to gross module area

TEMPERATURE COEFFICIENTS

Temperature coefficient I_{SC}	α (I_{SC})	[%/K]	+0.03
Temperature coefficient V_{OC}	β (V_{OC})	[%/K]	-0.26
Temperature coefficient P_{MPP}	Y (P_{MPP})	[%/K]	-0.34

PLEASE CONTACT YOUR AUTHORISED ALEO DEALER

ALEO SOLAR GMBH
Marius-Eriksen-Straße 1
17291 PRENZLAU
GERMANY

CONTACT
+49 3984-8328-0
info@aleo-solar.com
www.aleo-solar.com

©aleo solar GmbH 12/2024

valmont



Description of the agri-trackers of Barcelona and Bolzano demonstrators

Abbreviations

Abbreviations	Definitions
CU	Conversion Unit: portion of the plant belonging to the same ground network. Usually, it collides with a subfield.
DS	Switchboard to supply tracker actuator, where is housed a network Industrial switch and a 6-port RS-232/422/485 Serial Device Server.
GUI	Graphical User Interface: the software's
IPC	Industrial personal computer
IT	Information Technologies
PV	Photovoltaic
PS	Power Switchboard. It supplied the tracker actuators within the subfield.
QCC	Switchboard where is housed in the main tracker (second level SCADA) Server and allows access to HMI (optional). Each QCC could manage about 5MWp without any additional QP.
QP	Switchboard where is housed a network Industrial switch and a 4-port RS-232/422/485 Serial Device Servers.
RM	Resource Manager
SCADA	Supervision Control and Data Acquisition system
SF	Subfield: where all trackers are under the same snow and wind strategies and ground network.
SW	Software
TK	Tracker Kit is the mechanical component kit for tracker movement
TRJ-AI	Convert Tracker Control System™ software
TRK	Single-axis tracker
TSS	TRACKER SCADA SYSTEM

1. Background

As the Symbiosyst project, two different trackers were developed for AgriPV applications by Convert, tailored to the needs of the two Demo plants in the project: Demo in Bolzano and Demo in Barcelona.

The two trackers developed are different in terms of the track frame, while they are completely similar in terms of the mechanical handling part, the power supply system, the control system and the weather sensors.

More in detail:

- the structure of both trackers are completely innovative in shape and in many design solutions,
- the part concerning movement, power supply and control, refers to solutions already used to some extent by Convert in its standard trackers.

Therefore, bellow are reported:

- the technical data sheets of the two steel structures respectively trackers for Bolzano demo and Barcelona demo.
- The technical data sheets of all other components of the two trackers, which as indicated are the same in both cases.

2 . Main components of the power/control system.

The Convert power supply, movement control and handling is a system composed of many different devices:

1. QCC or Central Control Switchboard: it is the control unit (PLC) embedding all the functions that allow the monitoring and the control of the entire solar power plant **(SCADA)**.
2. QP or Remote Switchboard: it is a local unit that acts as an extension of the QCC, enabling to add additional weather sensors and/or to control one or more subfields.
3. PS or Power Switchboard: It is connected to LV or auxiliary transformers and is responsible to supply all the DS within the subfield.
4. DS or Distribution Switchboard: it is supplied by the PS and is responsible to supply the power and the communication to all the actuators connected to it.
5. Sensors: provide useful information and enable to set strategies for the safety of the entire system and optimal tracking.
6. Accessories: their existence depend on the PV plant requirements. For instance, whether wireless antenna (WLAN) are optional devices, they may become mandatory for a specific architecture, used for redundancy in case fiber optic is in use or to reach isolated portions of a plant.

MAIN (QCC) / REMOTE (QP) UNIT SWITCHBOARD



POWER SWITCHBOARD



DISTRIBUTION SWITCHBOARD

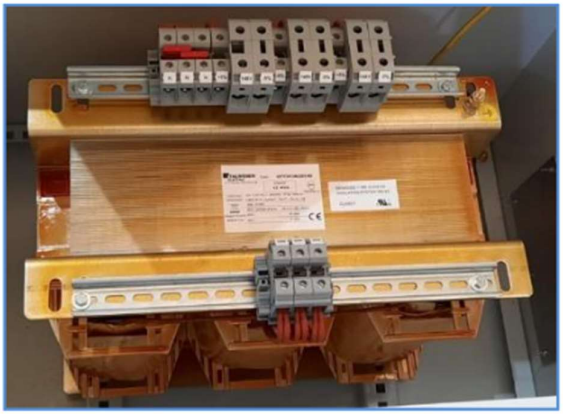

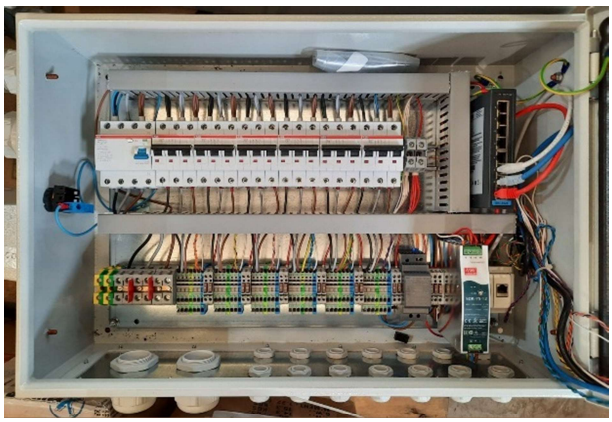

THREE-PHASE LINEAR ACTUATOR

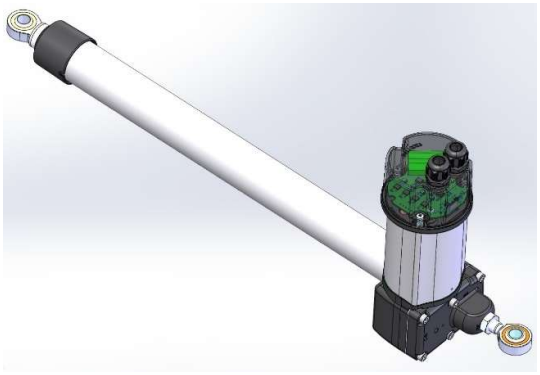

ELECTRONIC CONTROL BOARD

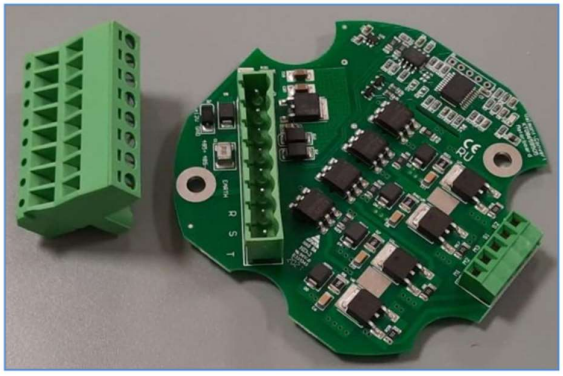

8-cores cable with conductors' colour.



GPS

IRRADIANCE SENSOR (PYRANOMETER)



SNOW SENSOR



ULTRASONIC WIND SENSOR



ANEMOMETER (WIND SPEED SENSOR)



ANEMOSCOPE (WIND DIRECTION SENSOR)



WLAN MAIN UNIT (OMNI) WITH ACCESS POINT



WLAN REMOTE UNIT (NANOSTATION)



All device respect the following guideline:

- **1993/68/EEC Directive of Council of the European Communities** dated July 22nd, 1993, and related to CE marking
- **2006/42/CE Directive of European Parliament** dated May 17th, 2006, related to machines
- **2006/95/CE Directive** on the approximation of the laws of the Member States relating to electrical equipment intended to be used within certain voltage limits
- **2004/108/CE Directive** on the approximation of the laws of the Member States relating to electromagnetic compatibility
- **2012/19/UE RAEE** Directive related to the waste of electrical and electronic equipment Identification Label

3 .DATASHEETS of power/control system componets.

SCADA QCC

TECHNICAL SPECIICATIONS	
Voltage	120 – 240 Vac +-10%
Frequency	50/60 Hz +-5%
Power Supply	1Phase + Neutral + Ground or 2Phase + Ground
Rated Current	2 A
Power Factor	0.6-1
Insulation Voltage	1000 Vac

COMMUNICATION
N°2 standard RS485 ports with additional stabilized 24Vdc power supply for tracker wireless system
N°2 standard RS485 ports with additional NOT stabilized 24Vdc power supply for wind speed and direction sensors
N°1 standard RS485 ports with additional stabilized 12Vdc power supply for snow sensor
N°1 standard RS232 port with additional stabilized 5Vdc power supply for GPS device
N°1 ethernet LAN port for an external internet connection
N°1 ethernet LAN port for an internal LAN connection with the plant QPs. An internal POE 24Vdc is integrated in the port to power the PLANT Wi-Fi connection.
N° 1 sun sensor port
Control interface to connect up to 40 tracker control boxes with up to 400 tracker axes

ACTUATOR

TECHNICAL SPECIICATIONS	
Thrust Load	20 kN
Mid-stroke static load limit	60 kN
Stroke	410mm
Speed	Max 1.75 mm/s
Voltage AC	148Vac ± 5%
Rated Frequency	50-60 Hz
Protection grade	IP 65
Thermal protection	Built-in thermal switch. Operating time 400s at 230 V / 5060 Hz – 20 °C
Configuration	Symmetrical three-phase induction actuator
Max. Current	0.85 A (60 kN)
Max. Power	130 W / 262 VA at 148V / 50-60 Hz
Nominal power	217 VA / 435 VA at 148V / 50-60 Hz

ELECTRONIC CONTROL BOARD

INPUT	
AC Voltage	DC Voltage
148 Vac ± 10%	12 Vdc ± 10%
50-60 Hz ± 5%	
Type 3P + G	
Nominal current 0.8 A	Nominal Current 20 mA
Integrated over-temperature protection	

LINEAR ACTUATOR CONTROL OUTPUT
Three-phase electric actuator driver

COMMUNICATION
RS485 Transceiver

FAILURE ALERTS
Status signal via n° 4 LED integrated on the board

OTHER CHARACTERISTICS
Micro controller unit 32 bits – 100 MHz – 512 kb flash
Static actuator driver controller
MTBF 500’000 hours

MECHANICAL CHARACTERISTICS
Diameter 90mm
Diameter 90 mm

ENVIRONMENTAL OPERATING CONDITIONS
Operating temperature -30 ÷ 85 °C
Max. operating altitude < 2000m asl

8-CORES CABLE FOR LINEAR ACTUATOR

TECHNICAL SPECIFICATIONS	
Type	Multipolar
Construction	Multipolar + outer sheath (Black)
Nominal size	4 x 1.0 mm^2 + 4 x 0.5 mm^2
Conductor	Flexible bar copper class 5 CEI EN 60228
Nominal conductor construction	Size 1.5mm: 28 wires x Φ 0.25mm Size 0.5mm: 16 wires x Φ 0.2mm
Max conductor resistance at 20 °C	Size 1.5mm: 13.3 Ohm/km Size 0.5mm: 39.0 Ohm/km
Average insulation thickness	Size 1.5mm: 0.7 mm Size 0.5mm: 0.7 mm
Core outer diameter	Size 1.5mm: 2.9 ± 0.1 mm Size 0.5mm: 2.3 ± 0.1 mm
Sheath material	PVC thermoplastic compound type DMV18 U.V. resistant according to HD605
Outer cable diameter	Max. 13 mm
Rated voltage U_o/U	0.45 / 0.75 kV
Max. operating temperature (on the conductor)	-40 ÷ 80 °C
Cable laying conditions	Cable duct without underground joints

POWER SWITCHBOARD

INPUT
Voltage 800/660/400 Vac ± 5%
Frequency 50 Hz ± 5%; 60Hz ± 5%
Type 3 P + G
Nominal power absorption 50 kVA Maximum power absorption 40 kVA / 60 kVA
Isolated
Integrated over-current protection

OUTPUT
8 x Three-Phase voltage outputs for Convert equipment
1 x Single-Phase voltage output for Convert equipment
Integrated over-current protection
Each power output provides power up to 2 Convert Distribution Switchboards
Each power output provides power up to 600 Convert Tracker Actuators

MECHANICAL CHARACTERISTICS
Cable entries from the side
Box size 610 x 460 x 720 (h) mm
Weight about 180 kg
Protection degree IP44 (box)
Cable entries from the side
Box size 610 x 460 x 720 (h) mm

ENVIRONMENTAL OPERATING CONDITIONS
Operating temperature -30°C ÷ +50°C
Storage temperature -20°C ÷ 60°C
Max. operating altitude < 2000m asl
Natural cooling without external air exchange

POWER SWITCHBOARD PROTECTION BOX

INPUT
Voltage: 800/660/400 Vac ± 5% / 148Vac ± 5%
Frequency 50 Hz ± 5%; 60Hz ± 5%
Type 3-phase + Ground
Nominal current: 46A
Icu: 6kA
Integrated over-voltage protection
Protection degree: IP65
Wall mounted
Cable entry: from the bottom

MAIN COMPONENTS
Metalic box 600x400x200 mm
Fuse holder 1000Vac 22x65mm
Circuit breaker 3x125 A
Fuse holder 600Vac 10x38mm

INPUT
Type: Fuses
Fuse holder 1000Vac 22x65mm
DIN rail 7,5x35mm mounting
Rated Voltage 1000Vac – 1500Vdc
Rated Current: 100A
SC withstand (SCCR): 50kA

DISTRIBUTION SWITCHBOARD

INPUT
Customized voltage supplied by Power Switchboard or through Smart Power technology
Frequency 50 Hz ± 5%; 60Hz ± 5%
Type 3 P + G
Nominal current 14 A
Power factor 0.4-1
Integrated over-voltage protection
Customized voltage supplied by Power Switchboard

OUTPUT
Up to N°8 power output to control up to 80 actuators
For each output up to10 actuators be connected in daisy chain

LINEAR ACTUATOR CONNECTION BUS
Up to N° 4 RS485 transceiver
Integrated over-voltage protection according to IEC 61000-4-5 Surge 1kV
Electrical insulation 1.5kV

FAILURE ALERTS
Status signal via n°4 LED integrated on the board
Complete alarm signaling to the CONVERT TRJ-AI Scada System

ETHERNET INTERFACE
N. 2 bus connectors (in/out) for a daisy chain connection up to 6 distribution switchboards
TCP-IP communication protocol with the CONVERT TRJ-AI Scada System

WIRELESS OPTION
The ethernet cable can be replaced by a wireless link
5GHz wi-fi link between the distribution switchboard and the Convert Scada QCC in the substation
The ethernet cable can be replaced by a wireless link

OTHER CHARACTERISTICS
Micro controller unit 32 bit – 100 MHz – 512 kB flash
Static actuator driver controller
Automatic restart after a power failure
MTBF 500’000 hours

MECHANICAL CHARACTERISTICS
Supporting plate for the connection on the tracker’s pile
Total size 700 x 500 x 300 mm (with sun and rain screen)
Box size 600 x 400 x 200 mm
Weight about 20 kg
Protection degree IP65 (box)

WIND SENSORS

ELECTRICAL FEATURES		
	Anemometer	Anemoscope
Power supply	9-30 Vdc	9-30 Vdc
Maximum current	100 mA	20 mA
Output	RS485	RS485
Output maximum current	100mA	50 mA
MEASUREMENT PERFORMANCE		
Range	3-180 km/h	0-360º
Starting speed	8 km/h	3 km/h
Survival speed	200 km/h	200 km/h
Accuracy	1 km/h (3-15 km/h) 3% (15-180Km/h)	+/-3º
GENERAL FEATURES		
Material	PA + FV	PA+FV / Aluminium
Bearings	Stainless steel X65Cr13	Stainless steel X65Cr13
Type of connection	Cable: 4x0.65mm^2	Cable: 4x0.65mm^2
Cable length	10m	10m
Weight	160 g	170 g
Dimensions	125x139mm	129x190 mm
Storage temperature	-35ºC +80ºC	35ºC +80ºC
Working temperature without ice	-20ºC +70ºC	-20ºC +60ºC
Reference standards	EN 61000-6-2:2001 EN 55022:2001, Class B	EN 61000-6-2:2001 EN 55022:2001, Class B
Protection degree	IP65 (UNE 20324:1993)	IP65 (UNE 20324:1993)

SNOW SENSOR

MEASUREMENT PERFORMANCE			
Measurement range (TNU04)	0.6 ÷ 4 m		
Accuracy	± 1 cm		
Sensibility	0.5 cm		
Beam width at 3DS	12° ± 2°		
WORKING CONDITIONS			
Temperature	-20°C ÷ +65°C		
Humidity	0% ÷ 100%		
OUTPUTS			
RS485-MODBUS	Temperature, height		
Voltage	0 ÷ 2 V ↔ 0 ÷ 5m		
Current	4 ÷ 20 mA ↔ 0 ÷ 5m		
POWER SUPPLY AND CONSUMPTION			
Input voltage	10 ÷ 16 Vdc		
Consumption [mA]	Minimum	Typical	Maximum
RS485 MODBUS/0 ÷ 2 V (TNU04)	-	1	-
RS485 MODBUS/0 ÷ 2 V (TNU08)	1	1.5	-
4 ÷ 20 mA	7	-	30
Capsule drive peak power [W]	14.4		
MECHANICAL CHARACTERISTICS			
Enclosure material	Plastic, ABS, aluminium alloy and inox hardware		
Weight	1.6kg		
Dimensions	210 mm; height 323 mm		
Protection grade	IP67		
Connection	7-poles male		

ULTRASONIC WIND SENSOR

MEASUREMENT PERFORMANCE	
Reporting range	0-76 m/s
Response time	0.25 s
Accuracy	±3 % at 10 m/s
Output resolution	0.1 m/s / 1°
Azimuth	0-360°
Update interval	1 – 3600s, at 1s steps
ELECTRICAL FEATURES	
Operating voltage	6 - 24 V DC (−10 ÷ +30 %)
Heating voltage	DC, AC, or full-wave rectified AC 12 - 24 V DC (−10 ÷ +30 %) 12 - 17 V ACrms (−10 ÷ +30 %)
Typical heating current	12 V DC: 800 mA, 24 V DC: 400 mA
Digital output	RS485
Communication protocol	MODBUS RTU
WORKING CONDITIONS	
Temperature	−52 ÷ 60 °C (−60 ÷ +140 °F)
Humidity	0 ÷ 100 %RH
Pressure	500 ÷ 1100 hPa
Wind	0 ÷ 60 m/s
MECHANICAL CHARACTERISTICS	
Dimensions	141 × 114 mm
Weight	510 g
Materials	Polycarbonate +20 % fiberglass Stainless steel (AISI 316)
Protection degree	IP65
Compliance marks	CE, RCM, RoHS, China RoHS, UKCA
Reference standards	EN 61326-1, industrial environment CISPR 32 / EN 55032, Class B, IEC 60068-2-1, 2, 6, 14, 30, 31, 78 IEC 60529, VDA 621-415, IEC 60945 (Exposed) DNV GL Type Examination Certificate No. TAA00000VF

WLAN MAIN UNIT ANTENNA

TECHNICAL DETAILS
Dimensions (mm): 799x90x65
Weight: 0,82 Kg
Power supply (POE): 24V – 0,5A
Wind Survivability: 200Km/h
Gain: 13 DSi
Operating Frequency: 5,45-5,85 GHz
Cross-pol Isolation: 25 DS minimum
Max. VSWR: 1,5:1
Beamwidth: 7° (Elevation)

WLAN REMOTE UNIT ANTENNA

TECHNICAL DETAILS
Dimensions (mm): 163x31x80
Weight: 0,18 Kg
Power supply (POE): 24V – 0,5A
Max Power consumption: 5,5W
Gain: 13 DSi
Operating Frequency: 5170-5875 MHz
Cross-pol Isolation: 20DS minimum
Max. VSWR: 1,4:1
Beamwidth: 45° (H-Pol)/45° (V-Pol) / 45° (Elevation)

4 . Tracker Barcellona Demo

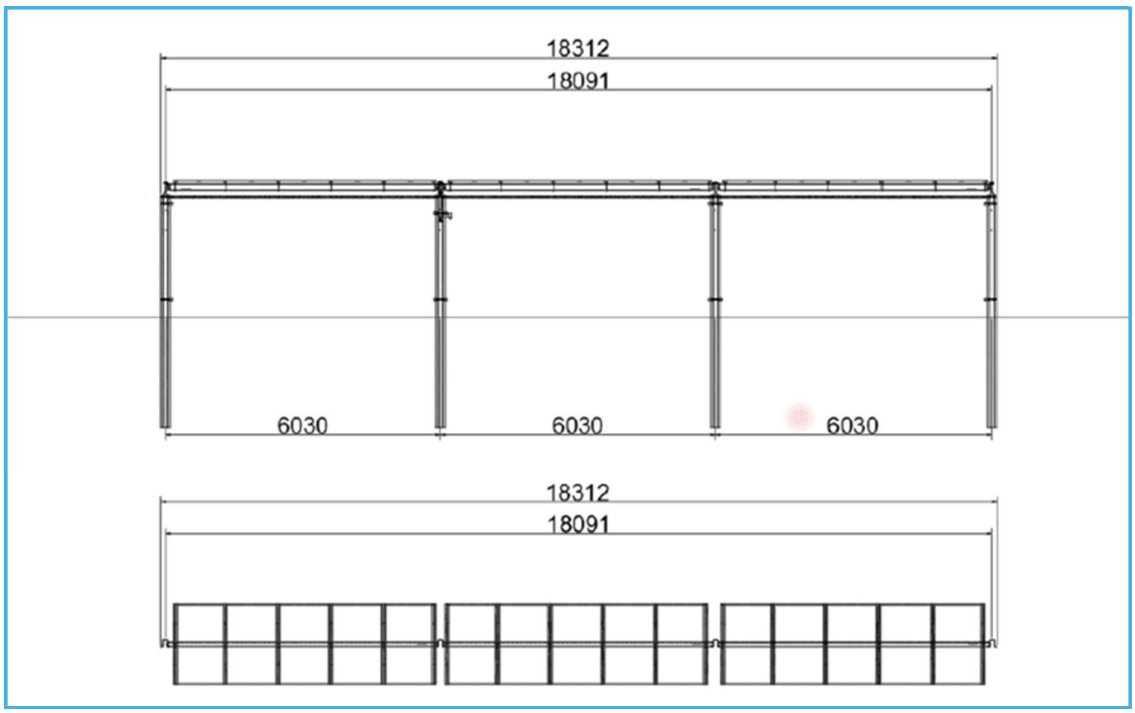

Top and Front View

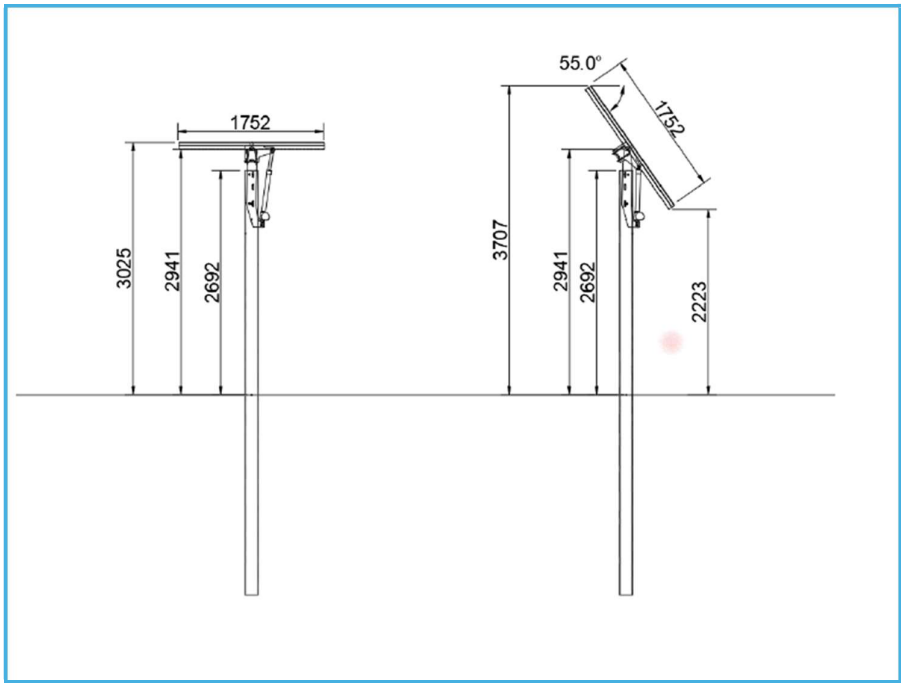

Lateral View

SOLAR TRACKING

Type of tracking system: horizontal single axis tracking system with back-tracking
Axis Tilt 0°
Axis Azimuth 0°
Tracking angle ± 50°
Maximum tracking error ± 2°

DESEGN SPECIFICATIONS

1 x 15 PV-modules in portrait configuration
Dimensions 18.291 m x 1.752 m x 3.5 96 (h Max) / 2.20 (h Min)
Minimum height over ground at maximum tracking angle: 2.20 m
Foundation: 4 driven pile
Photovoltaic area 31.69 m^2
Length of PV area 18.092 m
Foundations piles will be hot dip galvanized according with EN ISO 1461: 80.micron, Other parts will be galvanized according to the environmental constraints: 50 micron, mm
The tracker can be installed by four workers using: lift platform, mechanical crane lift and standard tools and mechanical equipment's for moving single components. No welding or cuttings are planned on site during installation phases
No mechanical transmission components between two tracker. The tracker is completely adaptable to geotechnical condition of site.
Balanced system: rotation axis is located on the center of gravity of the moving part of the structure
Stow position: 0°
Stow position wind conditions: • wind gust 3 sec.: 15,6 m/sec, at a height of 5 m • constant-speed wind. 29 m/sec, at a height of 5 m

DESIGN REFERENCE CODE

-
- EN 1990 (2006) – Basis of structural design
- EN 1991-1-3 (2015): Eurocode 1: Actions on structures - Part 1-3: General actions – snow loads;
- EN 1991-1-4 (2010): Eurocode 1: Actions on structures - Part 1-4: General actions – Wind actions;
- EN 1993-1-1 (2014): Eurocode 3: Design of steel structures - Part 1-1: General rules and rules for buildings;
- EN 1993-1-3 (2007): Eurocode 3: Design of steel structures - Part 1-3: General rules – Supplementary rules for cold-formed members and sheeting;
- EN 1993-1-5 (2017): Eurocode 3: Design of steel structures - Part 1-5: General rules – Plated structural elements;
- EN 1993-1-8 (2017): Eurocode 3: Design of steel structures - Part 1-8: General rules – Design of joints;
- EN 1997-1 (2017): Eurocode 7: Geotechnical design - Part 1: General rules;
- EN 1998-1 (2013): Eurocode 8: Design of structures for earthquake resistance - Part 1: General rules, seismic actions and rules for buildings;
- DB SE- AE (2009): Documento Básico Seguridad Estructural Acciones en la edificación
- NCSE-02 (2004): Norma de Construcción Sismorresistente: Parte general y edificación

5 .Tracker Bolzano Demo

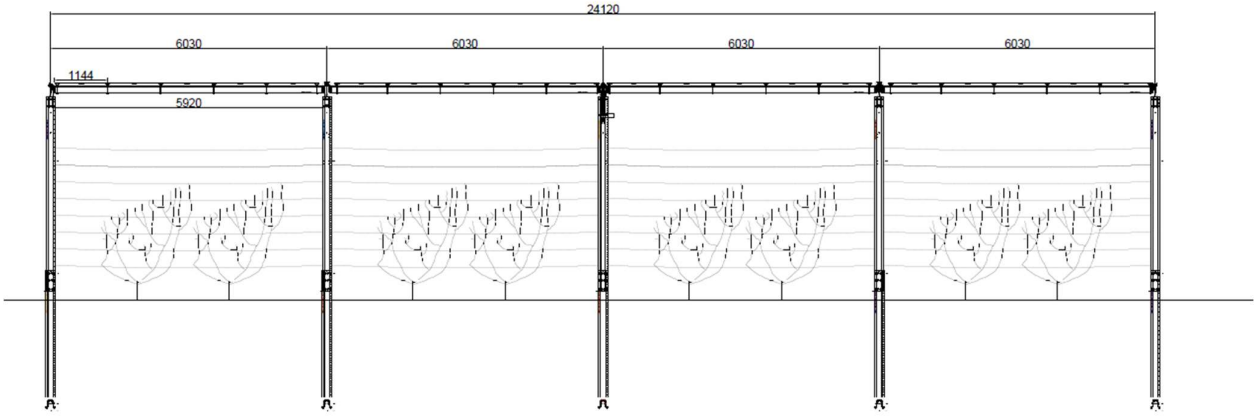

Front View

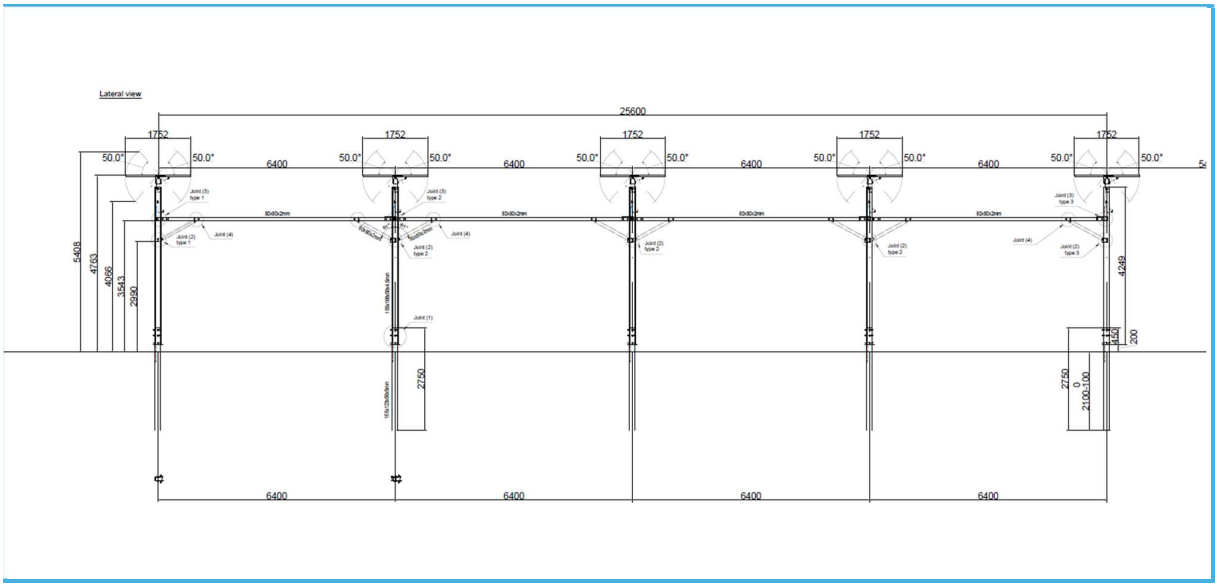

Lateral View

SOLAR TRACKING

Type of tracking system: horizontal single axis tracking system with back-tracking
Axis Tilt 0°
Axis Azimuth 0°
Tracking angle ± 50°
Maximum tracking error ± 2°

DESEGN SPECIFICATIONS

1 x 20 PV-modules in portrait configuration; modulus dimension: 1752x1144x40 mm
Dimensions 24.120 m x 1.752 m x 5.408 (h Max) / 4.763 (h Min)
Minimum free height over ground at maximum tracking angle: 3.543 m
Foundation: 5 driven pile
Rows of trackers connected to each other at poles by beam, a height of 3.5 m.
Photovoltaic area 40,04 m^2
Length of PV area 22,88 m
Foundations piles will be hot dip galvanized according with EN ISO 1461: 80.micron, Other parts are in Weathering Steel
The tracker can be installed by four workers using: lift platform, mechanical crane lift and standard tools and mechanical equipment's for moving single components. No welding or cuttings are planned on site during installation phases
No mechanical transmission components between two tracker. The tracker is completely adaptable to geotechnical condition of site.

Balanced system: rotation axis is located on the center of gravity of the moving part of the structure
Stow position: 0°
Stow position wind Conditions: • wind gust 3 sec.: 15,6 m/sec, at a height of 5 m • constant-speed wind. 29 m/sec, at a height of 5 m

DESIGN REFERENCE CODE

- EN 1990 (2006) – Basis of structural design
- EN 1991-1-3 (2015): Eurocode 1: Actions on structures - Part 1-3: General actions – snow loads;
- EN 1991-1-4 (2010): Eurocode 1: Actions on structures - Part 1-4: General actions – Wind actions;
- EN 1993-1-1 (2014): Eurocode 3: Design of steel structures - Part 1-1: General rules and rules for buildings;
- EN 1993-1-3 (2007): Eurocode 3: Design of steel structures - Part 1-3: General rules – Supplementary rules for cold-formed members and sheeting;
- EN 1993-1-5 (2017): Eurocode 3: Design of steel structures - Part 1-5: General rules – Plated structural elements;
- EN 1993-1-8 (2017): Eurocode 3: Design of steel structures - Part 1-8: General rules – Design of joints;
- EN 1997-1 (2017): Eurocode 7: Geotechnical design - Part 1: General rules;
- EN 1998-1 (2013): Eurocode 8: Design of structures for earthquake resistance - Part 1: General rules, seismic actions and rules for buildings;
- DB SE- AE (2009): Documento Básico Seguridad Estructural Acciones en la edificación
- NCSE-02 (2004): Norma de Construcción Sismorresistente: Parte general y edificación

R'n'D-modules for SYMBIOSYST 400 W

Premium PV panel

The durable one.
For a green planet.

Type 1

IMPROVED SURFACE
Anti-reflective coating ensures optimum self-cleaning and higher yields.

PACKED FOR SAFE TRANSPORT
Packed upright, avoiding the emergence of microcracks and thus ensuring factory quality at the place of delivery.

MADE IN GERMANY
Right here. In Prenzlau. In our production facility. Here we manufacture under the aspects of quality & durability since 2001.

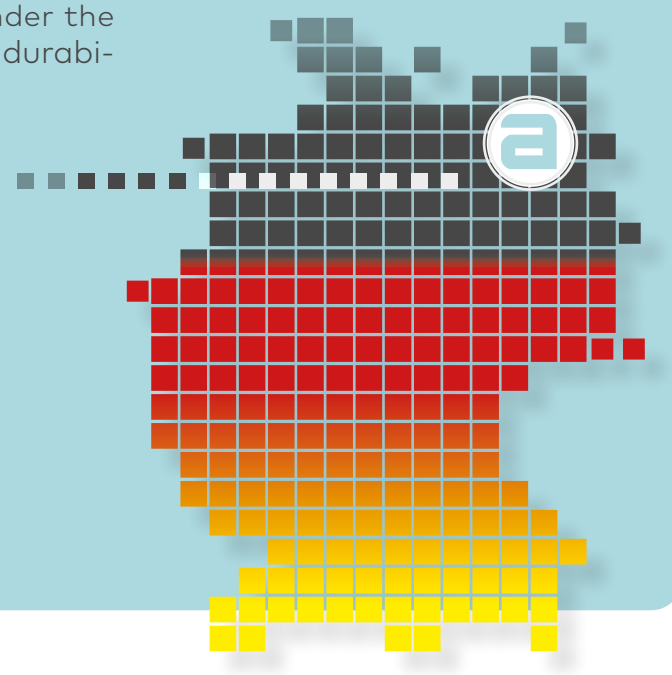

A SUSTAINABLE CHOICE
A premium product, which lasts for decades. Manufactured according to rigid environmental standards. Produced with 100 % green electricity.

QUALITY UNDER HAND AND SEAL

Design optimized with SmartCalc Module

aleo
www.aleo-solar.de

R'n'D-modules for SYMBIOSYST 400 W Premium PV panel

DIMENSIONS [mm]

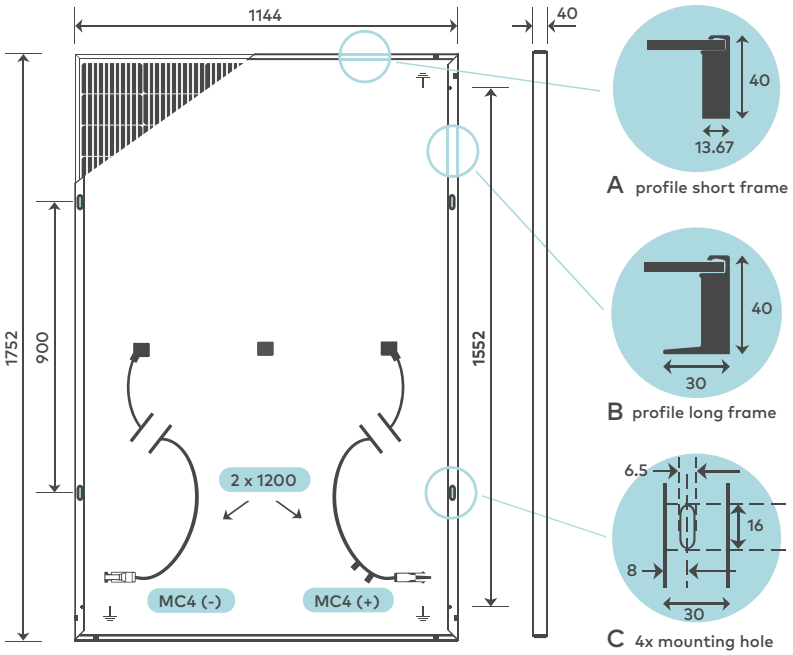

BASIC MODULE DATA

Length x width x height	[mm]	1752 x 1144 x 40
Weight	[kg]	22
Number of cells		108
Cell size	[mm]	182 x 91
Cell material		Monocrystalline Si, PERC
Number of Busbars		10
Front sheet		3.2 mm Solar glass (TSG) with anti-reflective coating
Back sheet		Polymer sheet, transparent
Frame material		Al alloy, black

BASIC DATA JUNCTION BOX

Parts of junction box acc. to IEC 62790	[mm]	left & right: 62 x 58 x 14 middle: 49 x 55 x 14
Bypass diodes		3 (one per box)
IP class		IP68
Cable	[mm]	1200 (+), 1200 (-) acc. to EN 50618
Connectors		genuine MC4 acc. to EN 62852

ELECTRICAL DATA (STC)

			TYPE 1
Rated power	P_{MPP}	[W]	400
Rated voltage	V_{MPP}	[V]	31.5
Rated current	I_{MPP}	[A]	12.7
Open-circuit voltage	V_{OC}	[V]	37.6
Short-circuit current	I_{SC}	[A]	13.1
Efficiency	η	[%]	20.0

Electrical values measured under standard test conditions (STC): 1000 W/m²; 25 °C; AM 1.5

CLASSIFICATION

Classification range (positive classification)	[W]	0/+9.99

ELECTRICAL DATA (LOW IRRADIANCE)

			TYPE 1
Power	P_{MPP}	[W]	77.6

Electrical values measured under: 200 W/m²; 25 °C; AM 1.5
Measurement tolerance of P_{MPP} under STC -3/+3 %; Accuracy of other electrical values -10/+10 %
Efficiency related to gross module area

TEMPERATURE COEFFICIENTS

Temperature coefficient I_{SC}	α (I_{SC})	[%/K]	+0.03
Temperature coefficient V_{OC}	β (V_{OC})	[%/K]	-0.26
Temperature coefficient P_{MPP}	Y (P_{MPP})	[%/K]	-0.34

PLEASE CONTACT YOUR AUTHORISED ALEO DEALER

ALEO SOLAR GMBH
Marius-Eriksen-Straße 1
17291 PRENZLAU
GERMANY

CONTACT
+49 3984-8328-0
info@aleo-solar.com
www.aleo-solar.com

©aleo solar GmbH 12/2024

SUN2000-12/15/17/20/25K-MB0

Smart Energy Controller



Active Safety

Active Arcing Protection

Higher Yields

Up to 30% More Energy with Optimizer

Battery-ready

2 Battery Terminals;

Compatible with LUNA2000-S0 and S1

Efficiency Curve

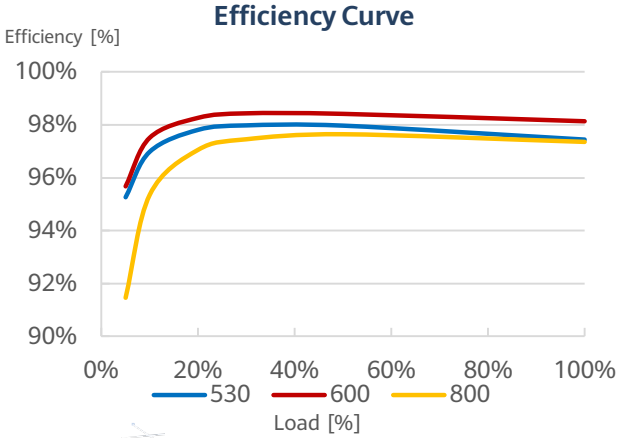

Circuit Diagram

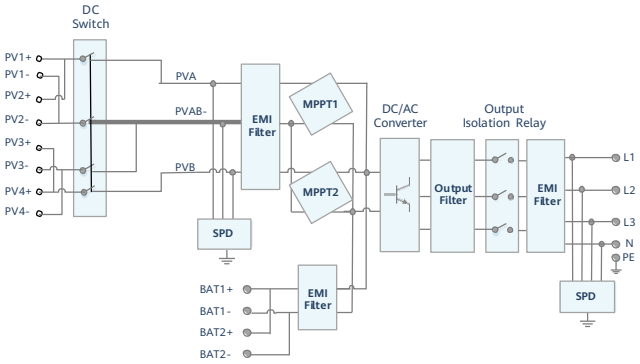

SUN2000-12/15/17/20/25K-MB0

Technical Specification

Technical Specification [1]	SUN2000-12K-MB0	SUN2000-15K-MB0	SUN2000-17K-MB0	SUN2000-20K-MB0	SUN2000-25K-MB0
Efficiency					
Max. efficiency	98.4 %	98.4 %	98.4 %	98.4 %	98.4 %
European weighted efficiency	97.9 %	98.0 %	98.1 %	98.1 %	98.2 %
DC Input					
Recommended max. PV power	18,000 Wp	22,500 Wp	25,500 Wp	30,000 Wp	37,500 Wp
Max. input voltage [2]	1,100 V				
Max. input current per MPPT	30 A (two strings) / 20 A (single string)				
Max. short-circuit current	40 A				
Start-up voltage	200 V				
MPPT operating voltage range [3]	200 V ~ 1,000 V				
Full-load MPPT voltage range	370 V ~ 800 V	410 V ~ 800 V	440 V ~ 800 V	480 V ~ 800 V	530 V ~ 800 V
Rated input voltage	600 V				
Max. number of inputs	4				
Number of MPP trackers	2				
Smart String Energy Storage System Terminal					
Compatible Smart String ESS	LUNA2000-5/10/15-S0 LUNA2000-7/14/21-S1 (Available from 30/11/2023)				
Number of terminals	2				
Max. charging power	21 kW (Single string) / 25 kW (Two strings)				
Max. discharging power	13.2 kW	16.5 kW	18.7 kW	22.0 kW	25.0 kW
Max. operating current	26.25 A (per string)				
Operating voltage range	600 V ~ 980 V				
Output					
Rated output power	12,000 W	15,000 W	17,000 W	20,000 W	25,000 W
Max. apparent power	13,200 VA	16,500 VA	18,700 VA	22,000 VA	27,500 VA
Max. active power (cosφ = 1)	13,200 W	16,500 W	18,700 W	22,000 W	27,500 W
Rated output voltage	220 Vac / 380 Vac, 230 Vac / 400 Vac, 240 Vac / 415 Vac; 3 W / N + PE				
Rated output current	18.2 A / 380 Vac	22.8 A / 380 Vac	25.8 A / 380 Vac	30.4 A / 380 Vac	38.0 A / 380 Vac
	17.3 A / 400 Vac	21.7 A / 400 Vac	24.5 A / 400 Vac	28.9 A / 400 Vac	36.1 A / 400 Vac
	16.7 A / 415 Vac	20.9 A / 415 Vac	23.7 A / 415 Vac	27.8 A / 415 Vac	34.8 A / 415 Vac
Max. output current	20.2 A / 380 Vac	25.2 A / 380 Vac	28.6 A / 380 Vac	33.6 A / 380 Vac	42.0 A / 380 Vac
	19.1 A / 400 Vac	23.9 A / 400 Vac	27.1 A / 400 Vac	31.9 A / 400 Vac	39.9 A / 400 Vac
	18.5 A / 415 Vac	23.1 A / 415 Vac	26.1 A / 415 Vac	30.8 A / 415 Vac	38.5 A / 415 Vac
Rated AC grid frequency	50 Hz / 60 Hz				
Adjustable power factor	0.8 leading ... 0.8 lagging				
Max. total harmonic distortion	< 3 %				
Feature & Protection					
Overvoltage category	PV Ⅱ / AC Ⅲ				
Input-side disconnection device	Yes				
Anti-islanding protection	Yes				
AC over-current protection	Yes				
DC reverse-polarity protection	Yes				
DC surge protection	TYPE II				
AC surge protection	Yes, compatible with TYPE II protection class according to EN/IEC 61643-11				
DC insulation resistance detection	Yes				
Residual current monitoring unit	Yes				
Arc fault protection	Yes				
Integrated PID recovery [4]	Yes				
General Data					
Operation temperature range	-25 °C ~ +60 °C (-13 °F ~ 140 °F)				
Relative humidity	0 % RH ~ 100 % RH				
Max. operating altitude	4,000 m (13,123 ft.) (Derating above 2,000 m)				
Cooling	Smart air cooling				
Display	LED indicators, Integrated WLAN + FusionSolar APP				
Communication	RS485; WLAN / Ethernet via Smart Dongle-WLAN-FE (Optional) 4G / 3G / 2G via Smart Dongle-4G (Optional); EMMA (Optional; available from 30/11/2023)				
Weight	21 kg				
Dimensions (W x H x D)	546 x 460 x 228 mm (21.5 x 18.1 x 9.0 inch)				
Protection level	IP66				
Max. number of paralleled unit (with Smart String ESS)	3				
Optimizer Compatibility					
Compatible optimizer	SUN2000-450W-P2, SUN2000-600W-P, MERC-1100W-P, MERC-1300W-P				
Standard Compliance (more available upon request)					
Certificates	EN/IEC62109-1, EN/IEC62109-2				
Grid connection standards	IEC61727, IEC62116, IEC61683, EN50530, ABNT NBR 16149/16150, MEA/PEA, G99, IRR-DCC-MV/IRR-TIC, Philippine Grid Code Resolution No. 07, NRS 097-2-1, EN50549-1, VDE4105, UTE15-712-1/VFR 2019, UNE217002, NTS631, RD244(UNE217001), PPDS, ROGA, TOR Erzeuger, CEI 0-21:2020-12 V1, CEI-016, C10/C11, EN50549-2, VDE4110				

*1 For Thailand, only SUN2000-12K-MB0 & SUN2000-15K-MB0 & SUN2000-20K-MB0 are available.
*2 The maximum input voltage is the upper limit of the DC voltage. Any higher input DC voltage would probably damage inverter.
*3 Any DC input voltage beyond the operating voltage range may result in inverter improper operating.
*4 SUN2000-12~25KTL-MB0 raises potential between PV- and ground to above zero through integrated PID recovery function to recover module degradation from PID. Supported module types include: P-type (mono, poly).

Disclaimer: the preceding values are measured by an internal laboratory of Huawei in a specific environment. The actual values may vary with products, software versions, usage conditions, and environmental factors.

SUN2000-30/36/40KTL-M3

Smart PV Controller



Intelligente

Monitoraggio intelligente
Su 8 Stringhe

Efficiente

Efficienza Max. 98.7%

Sicuro

Design Senza Fusibili

Affidabile

Scaricatori DC & AC di
tipo II Incorporati

Curva di Efficienza

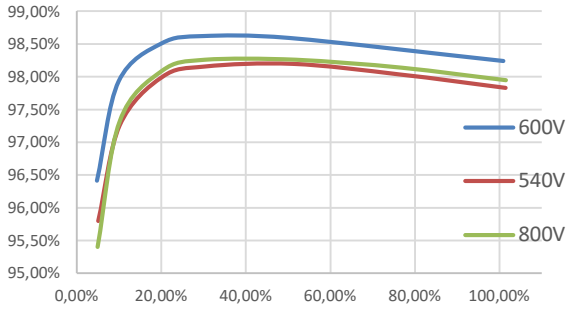

Carico %

Schema Elettrico

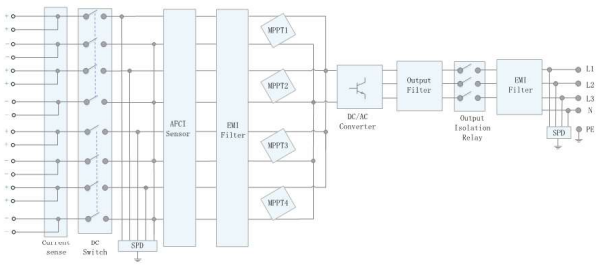

SUN2000-30/36/40KTL-M3

Specifiche tecniche

Specifiche Tecniche	SUN2000-30KTL-M3	SUN2000-36KTL-M3	SUN2000-40KTL-M3
Efficienza			
Efficienza massima	98.7%		
Efficienza Europea	98.4%		
Ingresso			
Tensione masima in ingresso [1]	1,100 V		
Corrente Max. per MPPT	27 A (per MPPT) / 20 A (per Input)		
Corrente di corto circuito Max. per MPPT	40 A		
Tensione di Avvio	200 V		
Range Operativo MPPT [2]	200 V ~ 1000 V		
Tensione di ingresso nominale	600 V		
Numero di ingressi	8		
Numero di MPPT	4		
Uscita			
Potenza Attiva Nominale in AC	30,000 W	36,000 W	40,000 W
Potenza Apparente Max. in AC	33,000 VA [3]	40,000 VA	44,000 VA
Tensione Nominale in Uscita	230 Vac / 400 Vac, 3W + N + PE		
Frequenza Nominale di Rete AC	50 Hz / 60 Hz		
Corrente Nominale in Uscita	43.3 A	52.0 A	57.8 A
Corrente Massima in Uscita	47.9 A	58.0 A	63.8 A
Fattore di potenza regolabile	0.8 Capacitivo ... 0.8 Induttivo		
Max. Distorsione Armonica Totale	< 3%		
Protezione			
Dispositivo di sgancio in ingresso	Sì		
Protezione anti-islanding	Sì		
Protezione da sovracorrente CA	Sì		
Protezione da cortocircuiti CA	Sì		
Protezione da sovratensione CA	Sì		
Protezione da polarità inversa CC	Sì		
Protezione da sovratensione CC	Sì		
Protezione da sovratensione CA	Sì		
Monitoraggio corrente residua	Sì		
Protezione da guasto arco	Sì		
Controllo del Ricevitore Ripple	Sì		
PID recovery incorporato [4]	Sì		
Comunicazione			
Display	Indicatori LED, WLAN Incorporata + FusionSolar APP		
RS485	Sì		
Smart Dongle	WLAN/Ethernet via Smart Dongle-WLAN-FE (Opzionale) 4G / 3G / 2G via Smart Dongle-4G (Opzionale)		
Monitoring BUS (MBUS)	Sì (Trasformatore di Isolamento Necessario)		

1. La tensione di ingresso massima è il limite superiore della tensione DC. Qualsiasi tensione DC in ingresso più alta probabilmente danneggerebbe l' inverter.
2. Qualsiasi tensione di ingresso DC oltre l'intervallo di tensione di esercizio può causare il funzionamento improprio dell'inverter.
3. Per l'Austria, il tedesco, il Belgio e l'Ucraina il Max.La potenza apparente CA non supererà 30,000 VA (riguardo al codice della rete: VDE-AR-N-4105, C10/11, Austria)
4. SUN2000-30-40KTL-M3 aumenta il potenziale tra PV- e messa a terra fino a oltre lo zero attraverso la funzione di recupero PID integrata per ripristinare la degradazione del modulo da PID. I tipi di modulo supportati includono: Tipo P (mono, poli), N-type (nPERT, HIT)

Specifiche tecniche

Specifiche Tecniche	SUN2000-30KTL-M3	SUN2000-36KTL-M3	SUN2000-40KTL-M3
Dati Generali			
Dimensioni (W x H x D)	640 x 530 x 270 mm		
Peso (Senza Staffa di Montaggio)	43 kg		
Range di Temperatura Operativo	-25 ~ + 60 °C (-13 °F ~ 140 °F)		
Sistema di Raffreddamento	Convezione Naturale		
Max. Altitudine operativa	4,000 m (13,123 ft.) (riduzione oltre 2,000 m)		
Umidità Relativa	0% RH ~ 100% RH		
Connettore DC	Amphenol Helios H4		
Connettore AC	Connettore a Prova di acqua + Terminale OT/DT		
Grado di Protezione	IP 66		
Tipologia	Senza Trasformatore (Transformerless)		
Consumo di potenza notturno	≤ 5.5W		
Ottimizzatore Compatibile			
Ottimizzatore Compatibile DC MBUS	SUN2000-450W-P, SUN2000-450W-P2, SUN2000-600W-P, MERC-1300W-P, MERC-1100W-P		
Conformità agli standard (Altri disponibili su richiesta)			
Sicurezza	EN 62109-1/-2, IEC 62109-1/-2, EN 50530, IEC 62116, IEC 60068, IEC 61683		
Standard di connessione alla rete	IEC 61727, VDE-AR-N4105, VDE 0126-1-1, BDEW, G59/3, UTE C 15-712-1, CEI 0-16, CEI 0-21, RD 661, RD 1699, P.O. 12.3,RD 413, EN-50438-Turkey, EN-50438-Ireland, C10/11, MEA, Resolution No.7, NRS 097-2-1, AS/NZS 4777.2, DEWA		

INSTRUMENTS

OWNER'S MANUAL

QUANTUM SENSOR

Models SQ-202X and SQ-205X

Rev: 28-March-2023



APOGEE INSTRUMENTS, INC. | 721 WEST 1800 NORTH, LOGAN, UTAH 84321, USA
TEL: (435) 792-4700 | FAX: (435) 787-8268 | WEB: APOGEEINSTRUMENTS.COM

Copyright © 2023 Apogee Instruments, Inc.

TABLE OF CONTENTS

Owner's Manual 1

Certificates of Compliance 3

Introduction 5

Sensor Models 6

Specifications 7

Deployment and Installation 9

Cable Connectors 11

Operation and Measurement 11

Maintenance and Recalibration 16

Troubleshooting and Customer Support 18

Return and Warranty Policy 19

CERTIFICATE OF COMPLIANCE

EU Declaration of Conformity

This declaration of conformity is issued under the sole responsibility of the manufacturer:

Apogee Instruments, Inc.
721 W 1800 N
Logan, Utah 84321
USA

for the following product(s):

Models: SQ-202X, SQ-205X
Type: Quantum Sensor

The object of the declaration described above is in conformity with the relevant Union harmonization legislation:

2014/30/EU	Electromagnetic Compatibility (EMC) Directive
2011/65/EU	Restriction of Hazardous Substances (RoHS 2) Directive
2015/863/EU	Amending Annex II to Directive 2011/65/EU (RoHS 3)

Standards referenced during compliance assessment:

EN 61326-1:2013	Electrical equipment for measurement, control, and laboratory use – EMC requirements
EN 63000:2018	Technical documentation for the assessment of electrical and electronic products with respect to the restriction of hazardous substances

Please be advised that based on the information available to us from our raw material suppliers, the products manufactured by us do not contain, as intentional additives, any of the restricted materials including lead (see note below), mercury, cadmium, hexavalent chromium, polybrominated biphenyls (PBB), polybrominated diphenyls (PBDE), bis (2-ethylhexyl) phthalate (DEHP), butyl benzyl phthalate (BBP), dibutyl phthalate (DBP), and diisobutyl phthalate (DIBP). However, please note that articles containing greater than 0.1 % lead concentration are RoHS 3 compliant using exemption 6c.

Further note that Apogee Instruments does not specifically run any analysis on our raw materials or end products for the presence of these substances, but we rely on the information provided to us by our material suppliers.

Signed for and on behalf of:
Apogee Instruments, March 2023



Bruce Bugbee
President
Apogee Instruments, Inc

CE

CERTIFICATE OF COMPLIANCE

UK Declaration of Conformity

This declaration of conformity is issued under the sole responsibility of the manufacturer:

Apogee Instruments, Inc.
721 W 1800 N
Logan, Utah 84321
USA

for the following product(s):

Models: SQ-202X, SQ-205X
Type: Quantum Sensor

The object of the declaration described above is in conformity with the relevant UK Statutory Instruments and their amendments:

2016 No. 1091	The Electromagnetic Compatibility Regulations 2016
2012 No. 3032	The Restriction of the Use of Certain Hazardous Substances in Electrical and Electronic Equipment Regulations 2012

Standards referenced during compliance assessment:

BS EN 61326-1:2013	Electrical equipment for measurement, control, and laboratory use – EMC requirements
BS EN 63000:2018	Technical documentation for the assessment of electrical and electronic products with respect to the restriction of hazardous substances

Please be advised that based on the information available to us from our raw material suppliers, the products manufactured by us do not contain, as intentional additives, any of the restricted materials including lead (see note below), mercury, cadmium, hexavalent chromium, polybrominated biphenyls (PBB), polybrominated diphenyls (PBDE), bis (2-ethylhexyl) phthalate (DEHP), butyl benzyl phthalate (BBP), dibutyl phthalate (DBP), and diisobutyl phthalate (DIBP). However, please note that articles containing greater than 0.1 % lead concentration are RoHS 3 compliant using exemption 6c.

Further note that Apogee Instruments does not specifically run any analysis on our raw materials or end products for the presence of these substances, but we rely on the information provided to us by our material suppliers.

Signed for and on behalf of:
Apogee Instruments, March 2023



Bruce Bugbee
President
Apogee Instruments, Inc.

INTRODUCTION

Radiation that drives photosynthesis is called photosynthetically active radiation (PAR) and is typically defined as total radiation across a range of 400 to 700 nm. PAR is often expressed as photosynthetic photon flux density (PPFD): photon flux in units of micromoles per square meter per second (µmol m^{-2} s^{-1}, equal to microEinsteins per square meter per second) summed from 400 to 700 nm (total number of photons from 400 to 700 nm). While Einsteins and micromoles are equal (one Einstein = one mole of photons), the Einstein is not an SI unit, so expressing PPFD as µmol m^{-2} s^{-1} is preferred.

The acronym PPF is also widely used and refers to the photosynthetic photon flux. The acronyms PPF and PPFD refer to the same variable. The two terms have co-evolved because there is not a universal definition of the term "flux". Some physicists define flux as per unit area per unit time. Others define flux only as per unit time. We have used PPFD in this manual because we feel that it is better to be more complete and possibly redundant.

Sensors that measure PPFD are often called quantum sensors due to the quantized nature of radiation. A quantum refers to the minimum quantity of radiation, one photon, involved in physical interactions (e.g., absorption by photosynthetic pigments). In other words, one photon is a single quantum of radiation.

Typical applications of quantum sensors include incoming PPFD measurement over plant canopies in outdoor environments or in greenhouses and growth chambers and reflected or under-canopy (transmitted) PPFD measurement in the same environments.

Apogee Instruments SQ-100X series quantum sensors consist of a cast acrylic diffuser (filter), interference filter, photodiode, and signal processing circuitry mounted in an anodized aluminum housing, and a cable to connect the sensor to a measurement device. Sensors are potted solid with no internal air space and are designed for continuous PPFD measurement in indoor or outdoor environments. The voltage signal from the sensor is directly proportional to radiation incident on a planar surface (does not have to be horizontal), where the radiation emanates from all angles of a hemisphere.

SENSOR MODELS

This manual covers quantum sensor models SQ-202X and SQ-205X, which provide a voltage signal. Additional models are covered in their respective manuals.

Model	Signal
SQ-202X	**0-2.5 V**
SQ-205X	**0-5 V**
SQ-100X	Self-powered
SQ-204X	4-20 mA
SQ-420X	USB
SQ-421X	SDI-12
SQ-422X	Modbus



A sensor's model number and serial number are located on the bottom of the sensor. If you need the manufacturing date of your sensor, please contact Apogee Instruments with the serial number of your sensor.

SPECIFICATIONS

	SQ-202X-SS	SQ-205X-SS
Power Supply	5 to 24 V DC; nominal current draw 300 µA	5.5 to 24 V DC**; nominal current draw 300 µA
Output Sensitivity	0.6 mV per µmol m^{-2} s^{-1}	1.25 mV per µmol m^{-2} s^{-1}
Calibration Factor (Reciprocal of Sensitivity)	1.6 µmol m^{-2} s^{-1} per mV	0.8 µmol m^{-2} s^{-1} per mV
Calibrated Output Range	0 to 2.5 V	0 to 5 V
Calibration Uncertainty	± 5 % (see Calibration Traceability below)	
Measurement Repeatability	Less than 0.5 %	
Long-term Drift (Non-stability)	Less than 2 % per year	
Non-linearity	Less than 1 % (up to 4000 µmol m^{-2} s^{-1})	
Response Time	Less than 1 ms	
Field of View	180°	
Spectral Range	370 to 650 nm (wavelengths where response is greater than 50 % of maximum; see Spectral Response below)	
Directional (Cosine) Response	± 5 % at 75° zenith angle (see Cosine Response below)	
Temperature Response	0.06 ± 0.06 % per C (see Temperature Response below)	
Operating Environment	-40 to 70 C; 0 to 100 % relative humidity; can be submerged in water up to depths of 30 m	
Dimensions	30.5 mm diameter, 37 mm height	
Mass (with 5 m cable)	140 g	
Cable	5 m of two conductor, shielded, twisted-pair wire; TPR jacket (high water resistance, high UV stability, flexibility in cold conditions); pigtail lead wires; stainless steel (316), M8 connector	

Calibration Traceability

Apogee SQX series quantum sensors are calibrated through side-by-side comparison to the mean of transfer standard quantum sensors under a reference lamp. The reference quantum sensors are recalibrated with a 200 W quartz halogen lamp traceable to the National Institute of Standards and Technology (NIST).

Spectral Response

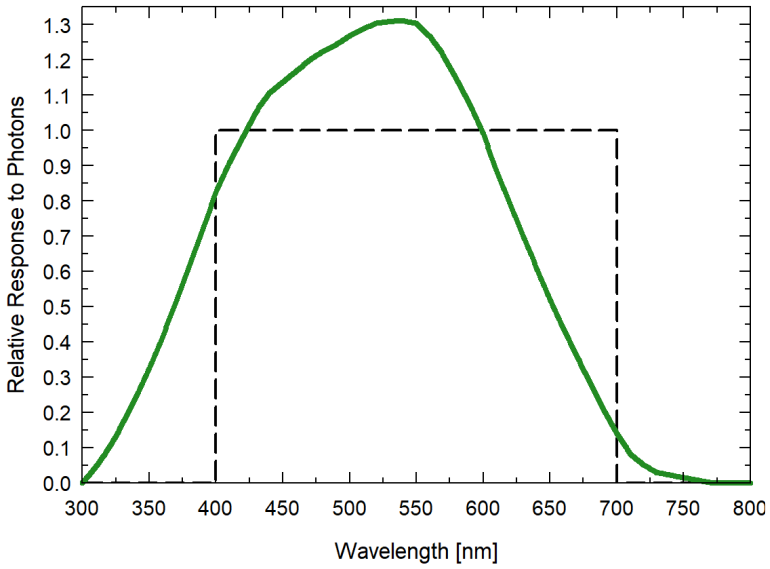

Mean spectral response of four SQ-100X series quantum sensors compared to PPFD weighting function. Spectral response measurements were made at 10 nm increments across a wavelength range of 350 to 800 nm in a monochromator with an attached electric light source. Measured spectral data from each quantum sensor were normalized by the measured spectral response of the monochromator/electric light combination, which was measured with a spectroradiometer.

Cosine Response



Directional (cosine) response is defined as the measurement error at a specific angle of radiation incidence. Error for Apogee SQ-100x series quantum sensors is approximately ± 2 % and ± 5 % at solar zenith angles of 45° and 75°, respectively.

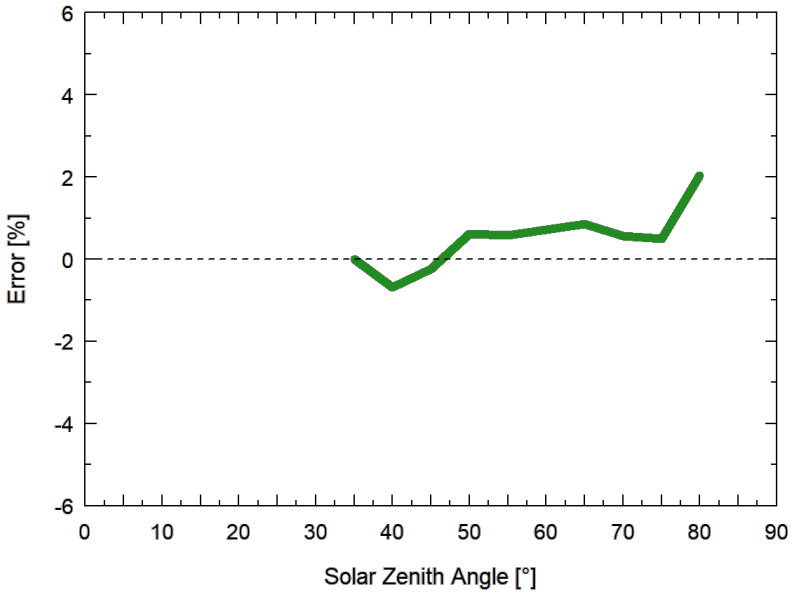

Mean cosine response of five SQ-100X series quantum sensors. Cosine response measurements were made by direct side-by-side comparison to the mean of seven reference SQ-500 quantum sensors.

DEPLOYMENT AND INSTALLATION

Mount the sensor to a solid surface with the nylon mounting screw provided. To accurately measure PPFD incident on a horizontal surface, the sensor must be level. An Apogee Instruments model AL-100 Leveling Plate is recommended to level the sensor when used on a flat surface or being mounted to surfaces such as wood. To facilitate mounting on a mast or pipe, the Apogee Instruments model AL-120 Solar Mounting Bracket with Leveling Plate is recommended.

Important: Only use the nylon screw provided when mounting to insulate the non-anodized threads of the aluminum sensor head from the base to help prevent galvanic corrosion. For extended submersion applications, more insulation may be necessary. Contact Apogee tech support for details.





Nylon Screw: 10-32x3/8





Nylon Screw: 10-32x3/8

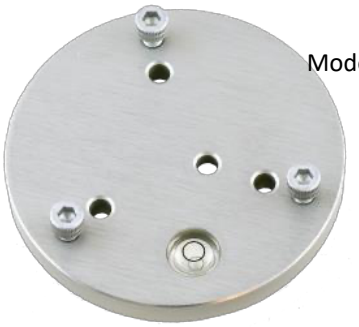

Model AL-100

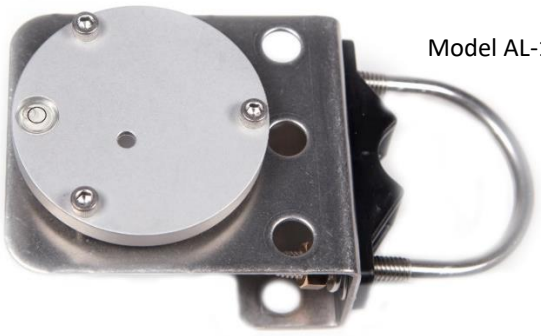

Model AL-120

To minimize azimuth error, the sensor should be mounted with the cable pointing toward true north in the northern hemisphere or true south in the southern hemisphere. Azimuth error is typically less than 1 %, but it is easy to minimize by proper cable orientation.

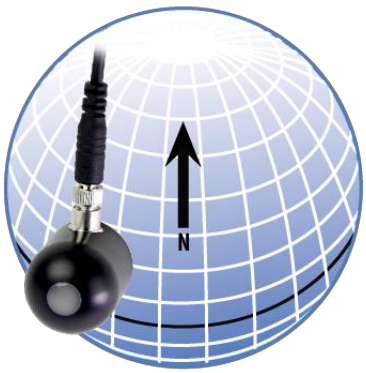

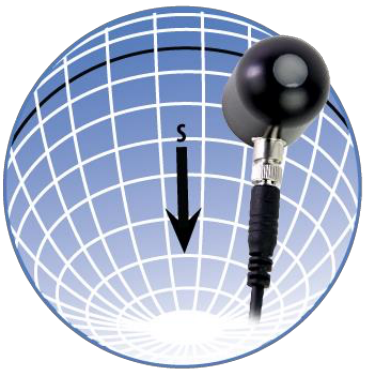

In addition to orienting the cable to point toward the nearest pole, the sensor should also be mounted such that obstructions (e.g., weather station tripod/tower or other instrumentation) do not shade the sensor. **Once mounted, the blue cap should be removed from the sensor.** The blue cap can be used as a protective covering for the sensor when it is not in use.

CABLE CONNECTORS

Apogee sensors offer cable connectors to simplify the process of removing sensors from weather stations for calibration (the entire cable does **not** have to be removed from the station and shipped with the sensor).

The ruggedized M8 connectors are rated IP68, made of corrosion-resistant marine-grade stainless-steel, and designed for extended use in harsh environmental conditions.



Cable connectors are attached directly to the head.

Instructions

Pins and Wiring Colors: All Apogee connectors have six pins, but not all pins are used for every sensor. There may also be unused wire colors inside the cable. To simplify datalogger connection, we remove the unused pigtail lead colors at the datalogger end of the cable.

If a replacement cable is required, please contact Apogee directly to ensure ordering the proper pigtail configuration.



A reference notch inside the connector ensures proper alignment before tightening.

Alignment: When reconnecting a sensor, arrows on the connector jacket and an aligning notch ensure proper orientation.

Disconnection for extended periods: When disconnecting the sensor for an extended period of time from a station, protect the remaining half of the connector still on the station from water and dirt with electrical tape or other method.



When sending sensors in for calibration, only send the sensor head.

Tightening: Connectors are designed to be firmly finger-tightened only. There is an o-ring inside the connector that can be overly compressed if a wrench is used. Pay attention to thread alignment to avoid cross-threading. When fully tightened, 1-2 threads may still be visible.

WARNING: Do **not** tighten the connector by twisting the black cable or sensor head, only twist the metal connector (blue arrows).

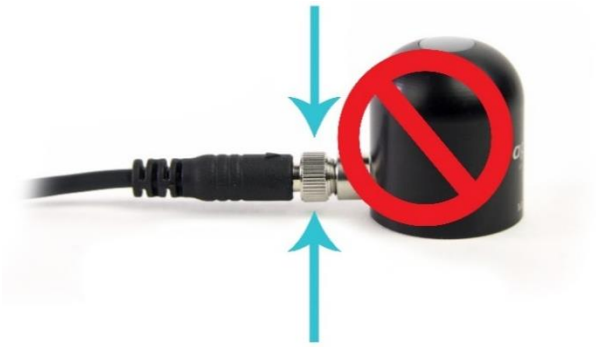

Finger-tighten firmly

OPERATION AND MEASUREMENT

Connect the sensor to a measurement device (meter, datalogger, controller) capable of measuring and displaying or recording a voltage signal with a range of 0-2.5 V (SQ-202X) or 0-5 V (SQ-205X) to cover the entire range of PPFD from the sun. In order to maximize the measurement resolution and signal-to-noise ratio, the signal input range of the measurement device should closely match the output range of the quantum sensors. The amplification circuit requires a power supply of 5-24 VDC (SQ-202X) or 5-24 VDC (SQ-205X). NOTE: To prevent sensor damage, **DO NOT connect the sensor to a power source greater than 24 VDC.**

Wiring for SQ-202X and SQ-205X

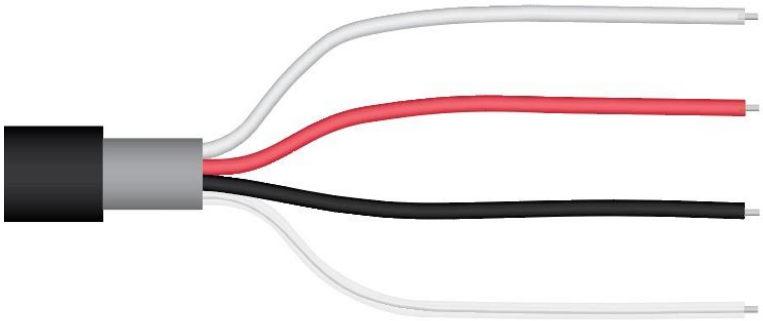

White: Positive (signal from sensor)

Red: Input Power SQ-212X 3.3-24 V DC, SQ-215X 5.5-24 V DC

Black: Ground (from sensor signal and output power)

Clear: Shield/Ground

Sensor Calibration

Amplified quantum sensor models have a standard PPFD calibration factor of exactly:

SQ-202X: 1.6 µmol m^{-2} s^{-1} per mV
SQ-205X: 0.8 µmol m^{-2} s^{-1} per mV

Multiply this calibration factor by the measured mV signal to convert sensor output to PPFD in units of µmol m^{-2} s^{-1}:

Calibration Factor (0.8 µmol m^{-2} s^{-1} per mV) * Sensor Output Signal (mV) = PPFD (µmol m^{-2} s^{-1})

0.8 * 4000 = 3200

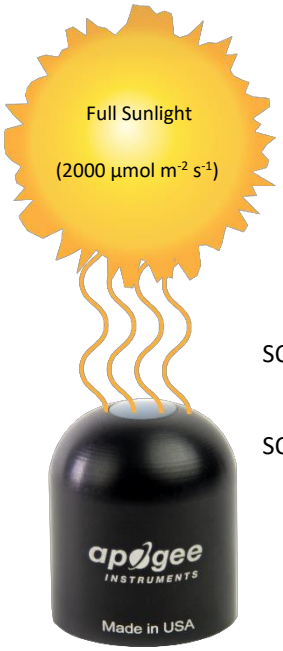

Example of PPFD measurement with an Apogee quantum sensor. Full sunlight yields a PPFD on a horizontal plane at the Earth's surface of approximately 2000 µmol m^{-2} s^{-1}. This yields an output signal of 2500 mV for the 0-5 V option or an output signal of 1250 mV for the 0-5 V option. The signal is converted to PPFD by multiplying by the calibration factor.

SQ-205X

Sensor Output: 5 V
Conversion Factor: 0.8 µmol m^{-2} s^{-1} per mV

SQ-202X

Sensor Output: 1.25 V
Conversion Factor: 1.6 µmol m^{-2} s^{-1} per mV

Spectral Errors

Apogee SQ-100X series sensors can measure PPFD for sunlight and electric light with a single calibration factor. However, errors occur in various light sources due to changes in spectral output. If the light source spectrum is known, then errors can be estimated and used to adjust the measurements. The weighting function for PPFD is shown in the graph below, along with the spectral response of Apogee SQ-100X series quantum sensors. The closer the spectral response matches the defined PPFD spectral weighting functions, the smaller spectral errors will be. The table below provides spectral error estimates for PPFD measurements from light sources different than the calibration source. The method of Federer and Tanner (1966) was used to determine spectral errors based on the PPFD spectral weighting functions, measured sensor spectral response, and radiation source spectral outputs (measured with a spectroradiometer). This method calculates spectral error and does not consider calibration, cosine, and temperature errors.

Federer, C. A., and C. B. Tanner, 1966. Sensors for measuring light available for photosynthesis. Ecology 47:654-657.

McCree, K. J., 1972. The action spectrum, absorptance and quantum yield of photosynthesis in crop plants. Agricultural Meteorology 9:191-216.

Spectral Errors for PPFD and YPFD Measurements with Apogee SQ-100X Series Quantum Sensors

Radiation Source (Error Calculated Relative to Sun, Clear Sky)	PPFD Error [%]
Sun (Clear Sky)	0.0
Sun (Cloudy Sky)	0.2
Reflected from Grass Canopy	5.0
Reflected from Deciduous Canopy	7.0
Reflected from Conifer Canopy	7.3
Transmitted below Grass Canopy	8.3
Transmitted below Deciduous Canopy	8.4
Transmitted below Conifer Canopy	10.1
Cool White Fluorescent (T5)	7.2
Cool White Fluorescent (T12)	8.3
Metal Halide	6.9
Ceramic Metal Halide	-0.9
High Pressure Sodium	3.2
Blue LED (448 nm peak, 20 nm full-width half-maximum)	14.5
Green LED (524 nm peak, 30 nm full-width half-maximum)	29.6
Red LED (635 nm peak, 20 nm full-width half-maximum)	-30.9
Red, Blue LED Mixture (80 % Red, 20 % Blue)	-21.2
Red, Green, Blue LED Mixture (70 % Red, 15 % Green, 15 % Blue)	-16.4
Cool White Fluorescent LED	7.3
Neutral White Fluorescent LED	1.1
Warm White Fluorescent LED	-7.8

Quantum sensors can be a very practical means of measuring PPFD and YPFD from multiple radiation sources, but spectral errors must be considered. The spectral errors in the table above can be used as correction factors for individual radiation sources.

Underwater Measurements and Immersion Effect

When a quantum sensor that was calibrated in air is used to make underwater measurements, the sensor reads low. This phenomenon is called the immersion effect and happens because the refractive index of water (1.33) is greater than air (1.00). The higher refractive index of water causes more light to be backscattered (or reflected) out of the sensor in water than in air (Smith,1969; Tyler and Smith,1970). As more light is reflected, less light is transmitted through the diffuser to the detector, which causes the sensor to read low. Without correcting for this effect, underwater measurements are only relative, which makes it difficult to compare light in different environments.

The SQ-100X series sensors have an immersion effect correction factor of 1.15. This correction factor should be multiplied to measurements made underwater.

Further information on underwater measurements and the immersion effect can be found at http://www.apogeeinstruments.com/underwater-par-measurements/.

MAINTENANCE AND RECALIBRATION

Blocking of the optical path between the target and detector can cause low readings. Occasionally, accumulated materials on the diffuser of the sensor can block the optical path in three common ways:

1. Moisture or debris on the diffuser.
2. Dust during periods of low rainfall.
3. Salt deposit accumulation from evaporation of sea spray or sprinkler irrigation water.

Apogee Instruments quantum sensors have a domed diffuser and housing for improved self-cleaning from rainfall, but active cleaning may be necessary. Dust or organic deposits are best removed using water, or window cleaner, and a soft cloth or cotton swab. Salt deposits should be dissolved with vinegar and removed with a cloth or cotton swab. **Salt deposits cannot be removed with solvents such as alcohol or acetone.** Use only gentle pressure when cleaning the diffuser with a cotton swab or soft cloth to avoid scratching the outer surface. The solvent should be allowed to do the cleaning, not mechanical force. **Never use abrasive material or cleaner on the diffuser.**

Although Apogee sensors are very stable, nominal calibration drift is normal for all research-grade sensors. To ensure maximum accuracy, recalibration every two years is recommended. Longer time periods between recalibration may be warranted depending on tolerances. See the Apogee webpage for details regarding return of sensors for recalibration (http://www.apogeeinstruments.com/tech-support-recalibration-repairs/).

To determine if your sensor needs recalibration, the Clear Sky Calculator (www.clearskycalculator.com) website and/or smartphone app can be used to indicate the PPFD incident on a horizontal surface at any time of day at any location in the world. It is most accurate when used near solar noon in spring and summer months, where accuracy over multiple clear and unpolluted days is estimated to be ± 4 % in all climates and locations around the world. For best accuracy, the sky must be completely clear, as reflected light from clouds causes PPFD to increase above the value predicted by the clear sky calculator. Measured values of PPFD can exceed values predicted by the Clear Sky Calculator due to reflection from thin, high clouds and edges of clouds, which enhances incoming PPFD. The influence of high clouds typically shows up as spikes above clear sky values, not a constant offset greater than clear sky values.

To determine recalibration need, input site conditions into the calculator and compare PPFD measurements to calculated values for a clear sky. If sensor PPFD measurements over multiple days near solar noon are consistently different than calculated values (by more than 6 %), the sensor should be cleaned and re-leveled. If measurements are still different after a second test, email calibration@apogeeinstruments.com to discuss test results and possible return of sensor(s).

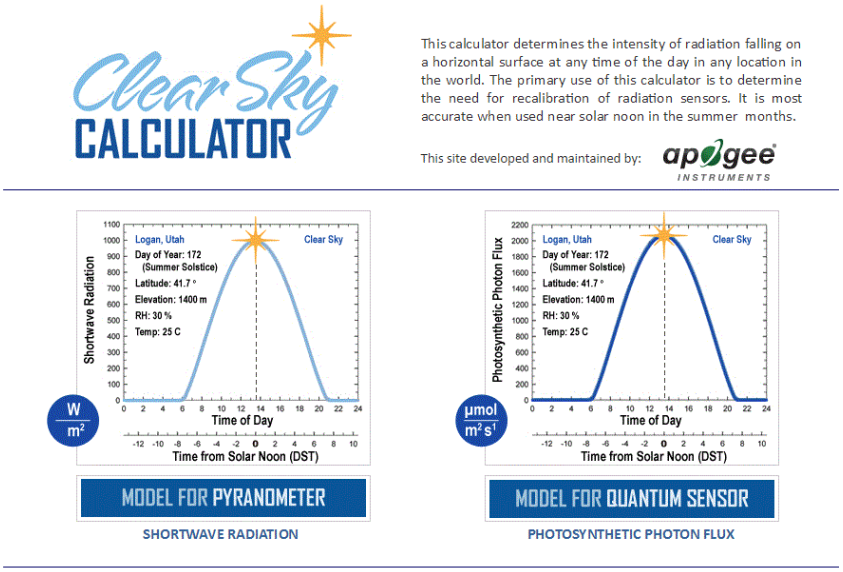

Homepage of the Clear Sky Calculator. Two calculators are available: one for quantum sensors (PPFD) and one for pyranometers (total shortwave radiation).

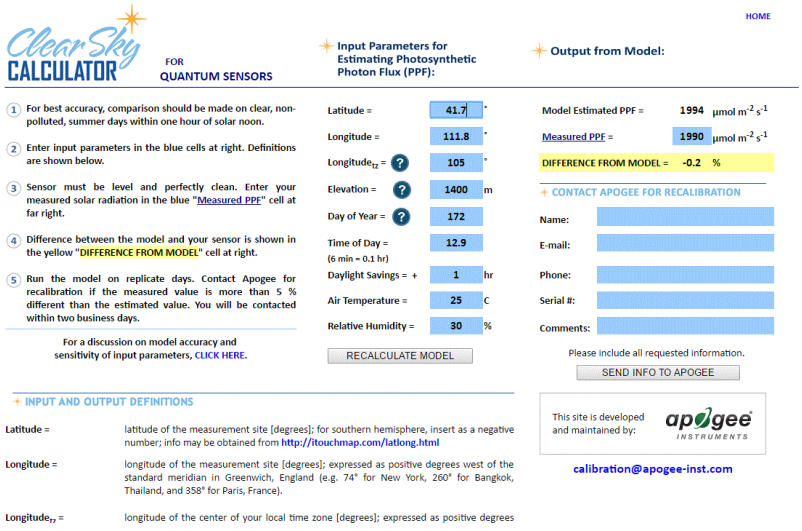

Clear Sky Calculator for quantum sensors. Site data are input in blue cells in middle of page and an estimate of PPFD is returned on right-hand side of page.

TROUBLESHOOTING AND CUSTOMER SUPPORT

Independent Verification of Functionality

Apogee SQ-200X series quantum sensors provide an amplified voltage output that is proportional to incident PPFD. A quick and easy check of sensor functionality can be determined using a DC power supply and a voltmeter. Power the sensor with a DC voltage by connecting the positive voltage signal to the red wire from the sensor and the negative (or common) to the black wire from the sensor. Use the voltmeter to measure across the white wire (output signal) and black wire. Direct the sensor head toward a light source and verify the sensor provides a signal. Increase and decrease the distance from the sensor head to the light source to verify that the signal changes proportionally (decreasing signal with increasing distance and increasing signal with decreasing distance). Blocking all radiation from the sensor should force the sensor signal to zero.

Compatible Measurement Devices (Dataloggers/Controllers/Meters)

SQ-200X series quantum sensors are calibrated with a standard calibration factor of 1.6 µmol m^{-2} s^{-1} per mV (SQ-212X) or 0.8 µmol m^{-2} s^{-1} per mV (SQ-215X), yielding a sensitivity of 0.6 mV per µmol m^{-2} s^{-1} (SQ-212X) or 1.25 mV per µmol m^{-2} s^{-1} (SQ-215X). Thus, a compatible measurement device (e.g., datalogger or controller) should have resolution of at least 0.6 mV to provide PPFD resolution of 1 µmol m^{-2} s^{-1}.

Cable Length

When the sensor is connected to a measurement device with high input impedance, sensor output signals are not changed by shortening the cable or splicing on additional cable in the field. Tests have shown that if the input impedance of the measurements device is greater than 1 mega-ohm there is negligible effect on the calibration, even after adding up to 100 m of cable. All Apogee sensors use shielded, twisted pair cable to minimize electromagnetic interference. For best measurements, the shield wire must be connected to an earth ground. This is particularly important when using the sensor with long lead lengths in electromagnetically noisy environments.

Modifying Cable Length:

See Apogee webpage for details on how to extend sensor cable length: (http://www.apogeeinstruments.com/how-to-make-a-weatherproof-cable-splice/).

Unit Conversion Charts

Apogee SQX series quantum sensors are calibrated to measure PPFD in units of µmol m^{-2} s^{-1}. Units other than photon flux density (e.g., energy flux density, illuminance) may be required for certain applications. It is possible to convert the PPFD value from a quantum sensor to other units, but it requires spectral output of the radiation source of interest. Conversion factors for common radiation sources can be found on the Unit Conversions page in the Support Center on the Apogee website (http://www.apogeeinstruments.com/unit-conversions/; scroll down to Quantum Sensors section). A spreadsheet to convert PPFD to energy flux density or illuminance is also provided in the Unit Conversions page in the Support Center on the Apogee website (http://www.apogeeinstruments.com/content/PPFD-to-Illuminance-Calculator.xls).

RETURN AND WARRANTY POLICY

RETURN POLICY

Apogee Instruments will accept returns within 30 days of purchase as long as the product is in new condition (to be determined by Apogee). Returns are subject to a 10 % restocking fee.

WARRANTY POLICY

What is Covered
All products manufactured by Apogee Instruments are warranted to be free from defects in materials and craftsmanship for a period of four (4) years from the date of shipment from our factory. To be considered for warranty coverage an item must be evaluated by Apogee.

Products not manufactured by Apogee (spectroradiometers, chlorophyll content meters, EE08-SS probes) are covered for a period of one (1) year.

What is Not Covered
The customer is responsible for all costs associated with the removal, reinstallation, and shipping of suspected warranty items to our factory.

The warranty does not cover equipment that has been damaged due to the following conditions:

1. Improper installation, use, or abuse.

2. Operation of the instrument outside of its specified operating range.

3. Natural occurrences such as lightning, fire, etc.

4. Unauthorized modification.

5. Improper or unauthorized repair.

Please note that nominal accuracy drift is normal over time. Routine recalibration of sensors/meters is considered part of proper maintenance and is not covered under warranty.

Who is Covered
This warranty covers the original purchaser of the product or other party who may own it during the warranty period.

What Apogee Will Do
At no charge Apogee will:

1. Either repair or replace (at our discretion) the item under warranty.

2. Ship the item back to the customer by the carrier of our choice.

Different or expedited shipping methods will be at the customer's expense.

How To Return An Item

1. Please do not send any products back to Apogee Instruments until you have received a Return Merchandise Authorization (RMA) number from our technical support department by submitting an online RMA form at www.apogeeinstruments.com/tech-support-recalibration-repairs/. We will use your RMA number for tracking of the service item. Call (435) 245-8012 or email techsupport@apogeeinstruments.com with questions.

2. For warranty evaluations, send all RMA sensors and meters back in the following condition: Clean the sensor's exterior and cord. Do not modify the sensors or wires, including splicing, cutting wire leads, etc. If a connector has been attached to the cable end, please include the mating connector – otherwise the sensor connector will be removed in order to complete the repair/recalibration. ***Note:*** *When sending back sensors for routine calibration that have Apogee's standard stainless-steel connectors, you only need to send the sensor with the 30 cm section of cable and one-half of the connector. We have mating connectors at our factory that can be used for calibrating the sensor.*

3. Please write the RMA number on the outside of the shipping container.

4. Return the item with freight pre-paid and fully insured to our factory address shown below. We are not responsible for any costs associated with the transportation of products across international borders.

Apogee Instruments, Inc.
721 West 1800 North Logan, UT
84321, USA

5. Upon receipt, Apogee Instruments will determine the cause of failure. If the product is found to be defective in terms of operation to the published specifications due to a failure of product materials or craftsmanship, Apogee Instruments will repair or replace the items free of charge. If it is determined that your product is not covered under warranty, you will be informed and given an estimated repair/replacement cost.

PRODUCTS BEYOND THE WARRANTY PERIOD

For issues with sensors beyond the warranty period, please contact Apogee at techsupport@apogeeinstruments.com to discuss repair or replacement options.

OTHER TERMS

The available remedy of defects under this warranty is for the repair or replacement of the original product, and Apogee Instruments is not responsible for any direct, indirect, incidental, or consequential damages, including but not limited to loss of income, loss of revenue, loss of profit, loss of data, loss of wages, loss of time, loss of sales, accruement of debts or expenses, injury to personal property, or injury to any person or any other type of damage or loss.

This limited warranty and any disputes arising out of or in connection with this limited warranty ("Disputes") shall be governed by the laws of the State of Utah, USA, excluding conflicts of law principles and excluding the Convention for the International Sale of Goods. The courts located in the State of Utah, USA, shall have exclusive jurisdiction over any Disputes.

This limited warranty gives you specific legal rights, and you may also have other rights, which vary from state to state and jurisdiction to jurisdiction, and which shall not be affected by this limited warranty. This warranty extends only to you and cannot by transferred or assigned. If any provision of this limited warranty is unlawful, void, or unenforceable, that provision shall be deemed severable and shall not affect any remaining provisions. In case of any inconsistency between the English and other versions of this limited warranty, the English version shall prevail.

This warranty cannot be changed, assumed, or amended by any other person or agreement.

Copyright © 2023 Apogee Instruments, Inc.

APOGEE QUANTUM SENSORS

Original X & Full-spectrum Series



The photosynthetically active radiation measurement tool of choice for lighting researchers

Features

Apogee Instruments Quantum Sensors are the tool of choice for researchers and agricultural professionals measuring photosynthetically active radiation (PAR) all over the world. Apogee offers two types of quantum sensors: a **Full-spectrum Quantum** and **Original X Quantum Sensor.** Consult our spectral response graph to decide which model is right for your application.

Accurate, Stable Measurements

Cost-effective, original quantum sensors work well for broadband radiation sources (sun, high-pressure sodium, metal halide, cool white fluorescent lamps), while full-spectrum sensors are good for all light sources, including LEDs. Offers a self-cleaning, cosine-corrected head that is fully-potted for a waterproof design.

Typical PPFD Measurement Applications

- Incoming and reflected PPFD over and under plant canopies in greenhouses, in fields, and in growth chambers
- Aquatic environments including salt water aquariums and freshwater lakes and streams

Calibration Traceability

Apogee SQ series quantum sensors are calibrated through side-by-side comparison to the mean of four transfer standard sensors under a reference lamp. The reference sensors are recalibrated with a quartz halogen lamp traceable to the National Institute of Standards and Technology (NIST).

Spectral Response

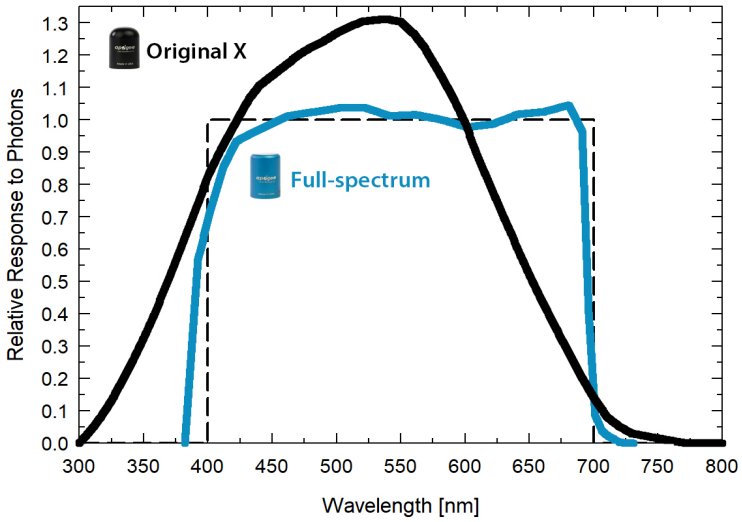

Spectral response of **original X quantum sensor (black)** and **full-spectrum quantum sensor (blue)** compared to defined response of plants to radiation (dashed).

Spectral Errors

	Apogee SQ-500	Apogee SQ-100X	LI-COR LI-190	Kipp & Zonen PQS 1
Sun (Clear Sky)	**0.0**	0.0	-0.4	-1.0
Sun (Cloudy Sky)	**0.1**	0.2	-0.2	-1.3
Sun (Reflected from Grass Canopy)	**-0.3**	5.0	-0.8	1.1
Sun (Transmitted below Wheat Canopy)	**0.1**	7.0	-0.1	-0.3
Cool White Fluorescent (T5)	**0.0**	7.2	0.0	0.0
Metal Halide	**0.9**	6.9	0.2	-1.7
Ceramic Metal Halide	**0.3**	-8.8	0.4	-0.7
High Pressure Sodium	**0.1**	3.3	1.3	1.4
Red LED (667 nm peak, 20 nm full-width half-maximum)	**2.8**	-56.7	3.5	-1.8
Red, Blue, White LED Mixture (60 % Red, 25 % White, 15 % Blue)	**-2.0**	-21.2	2.6	-1.7

FULL-SPECTRUM QUANTUM SENSORS

SQ-500 Series



Output Options

- 0 to 40 mV
- 0 to 5 V
- USB
- Modbus
- 0 to 2.5 V
- 4 to 20 mA
- SDI-12
- or hand-held meter

MQ-500



Product Specifications

	SQ-500-SS	SQ-512-SS	SQ-514-SS	SQ-515-SS	SQ-520	SQ-521-SS	SQ-522-SS
Power Supply	Self-powered	5 to 24 V DC	12 to 24 V DC	5.5 to 24 V DC	5 V USB power source	5.5 to 24 V DC	
Current Draw	–	At 12 V is 57 µA	maximum of 20 mA	At 12 V is 57 µA	61 mA when logging	1.4 mA (quiescent), 1.8 mA (active)	RS-232 37 mA; RS-485 quiescent 37 mA, active 42 mA
Output (sensitivity)	0.01 mV per µmol m^{-2} s^{-1}	0.625 mV per µmol m^{-2} s^{-1}	0.004 mA per µmol m^{-2} s^{-1}	1.25 mV per µmol m^{-2} s^{-1}	–		
Resolution	–				0.1 µmol m^{-2} s^{-1}	–	
Calibration Factor (reciprocal of output)	100 µmol m^{-2} s^{-1} per mV	1.6 µmol m^{-2} s^{-1} per mV	250 µmol m^{-2} s^{-1} per mA	0.8 µmol m^{-2} s^{-1} per mV	Custom for each sensor and stored in the firmware		
Calibration Uncertainty	± 5 %						
Output Range	0 to 40 mV	0 to 2.5 V	4 to 20 mA	0 to 5 V	USB	SDI-12	Modbus
Measurement Repeatability	Less than 0.5 %						
Long-term Drift	Less than 2 % per year						
Non-linearity	Less than 1 % (up to 4000 µmol m^{-2} s^{-1})						
Response Time	Less than 1 ms				Software updates every second	Less than 0.6 s	Less than 200 ms
Field of View	180°						
Spectral Range	389 to 692 nm ± 5 nm (wavelengths where response is greater than 50 %)						
Directional (cosine) Response	± 5 % at 75° zenith angle						
Temperature Response	-0.11 ± 0.04 % per C						
Operating Environment	-40 to 70 C; 0 to 100 % relative humidity; can be submerged in water up to depths of 30 m						
Dimensions	24 mm diameter, 37 mm height	30.5 mm diameter, 37 mm height			24 mm diameter, 37 mm height	30.5 mm diameter, 37 mm height	
Mass (5 m of cable)	100 g	140 g			100 g	140 g	
Warranty	4 years against defects in materials and workmanship						

ORIGINAL X QUANTUM SENSORS

SQ-100X, SQ-200X, & SQ-400X Series



Output Options

- 0 to 400 mV
- 0 to 5 V
- USB
- Modbus
- 0 to 2.5 V
- 4 to 20 mA
- SDI-12
- or hand-held meter

MQ-200X



Product Specifications

	SQ-100X-SS	SQ-202X-SS	SQ-204X-SS	SQ-205X-SS	SQ-420X	SQ-421X-SS	SQ-422X-SS
Power Supply	Self-powered	5 to 24 V DC	7 to 24 V DC	5.5 to 24 V DC	5 V USB power source	5.5 to 24 V DC	
Current Draw	–	10 µA	22 mA maximum; 2 mA quiescent	10 µA	61 mA when logging	1.4 mA (quiescent), 1.8 mA (active)	RS-232 37 mA; RS-485 quiescent 37 mA, active 42 mA
Output (sensitivity)	0.1 mV per µmol m^{-2} s^{-1}	0.6 mV per µmol m^{-2} s^{-1}	0.004 mA per µmol m^{-2} s^{-1}	1.25 mV per µmol m^{-2} s^{-1}	–		
Calibration Factor (reciprocal of output)	10 µmol m^{-2} s^{-1} per mV	1.6 µmol m^{-2} s^{-1} per mV	250 µmol m^{-2} s^{-1} per mA	0.8 µmol m^{-2} s^{-1} per mV	Custom for each sensor and stored in the firmware		
Calibration for Uncertainty	± 5 %						
Output Range	0 to 250 mV	0 to 2.5 V	4 to 20 mA	0 to 5 V	USB	SDI-12	Modbus
Measurement Repeatability	Less than 0.5 %						
Long-term Drift	Less than 2 % per year						
Non-linearity	Less than 1 % (up to 2500 µmol m^{-2} s^{-1})	Less than 1 % (up to 4000 µmol m^{-2} s^{-1})			Less than 1 % (up to 2500 µmol m^{-2} s^{-1})		
Response Time	Less than 1 ms				Software updates every second	Less than 0.6 s	Less than 200 ms
Field of View	180°						
Spectral Range	370 to 650 nm (wavelengths where response is greater than 50 % maximum)						
Directional (cosine) Response	± 5 % at 75° zenith angle						
Temperature Response	-0.04 % per C						
Operating Environment	-10 to 60 C; 0 to 100 % relative humidity; can be submerged in water up to 30 m						
Dimensions	24 mm diameter, 33 mm height	30.5 mm diameter, 37 mm height			24 mm diameter, 33 mm height	30.5 mm diameter, 37 mm height	
Mass (5 m of cable)	90 g	140 g			90 g	140 g	
Warranty	4 years against defects in materials and workmanship						

Dimensions

SQ-500 & SQ-520

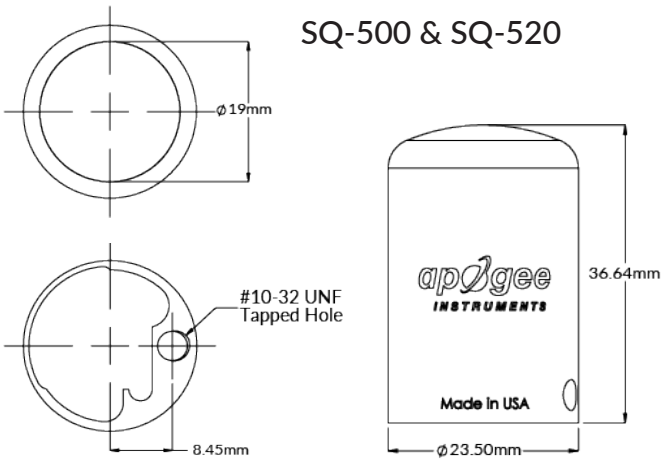

All other full-spectrum quantum and original X quantum models

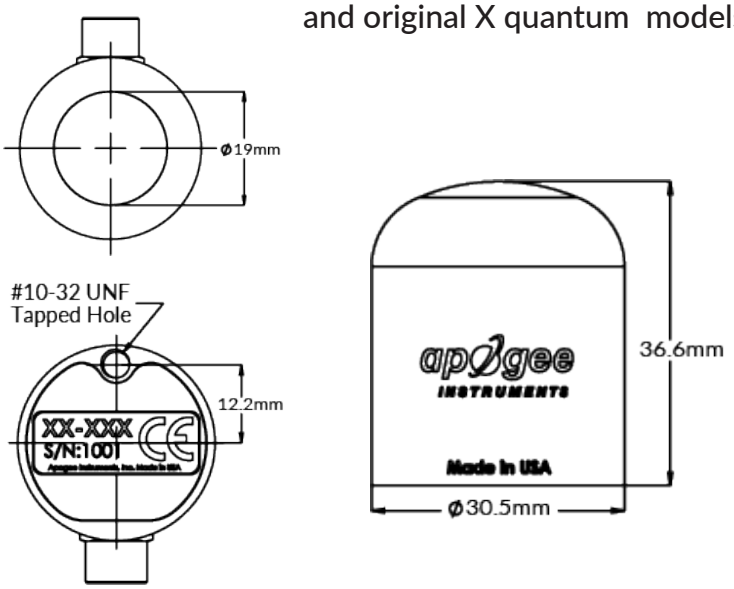

SQ-100X
& SQ-420X

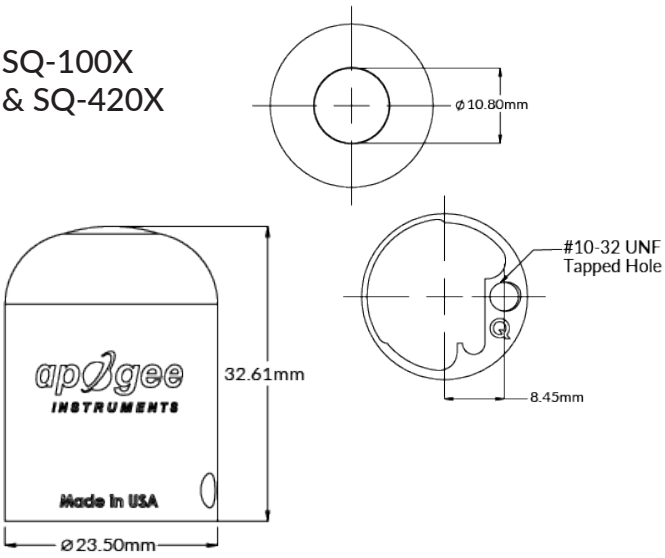



Case Study

The **Kuwait Institute for Scientific Research** used Apogee's **MQ-510** underwater full-spectrum quantum meters to help model algal species and their growth rate in Kuwait Bay. This research advances the researchers' understanding of the frequent algal bloom and fish kill incidents that typically occur in the summer.



E+E

your partner
in sensor
technology.

Datasheet HTP201

Humidity and Temperature Probe with Analogue Outputs



www.epluse.com

HTP201

Humidity and Temperature Probe with Analogue Outputs

With its outstanding price performance ratio, HTP201 is the perfect solution for cost effective and reliable measurement of relative humidity (RH) and temperature (T) in most various industries.

Outstanding Measurement Performance with Patented Sensor Technology

The E+E RH/T sensing element with proprietary protection and sealed solder pads ensures excellent long-term performance of the HTP201 over the entire working range and even in dusty and dirty environment. Innovative PCB design inside the probe reduces self-heating relevantly.

Versatility and Robustness

Excellent protection against external influences is ensured by the combination of completely encapsulated electronics and the long-term stable E+E RH/T sensing element. Its IP65 stainless steel or polycarbonate enclosure and integrated cable or a threaded connector make it a versatile probe tackling even challenging applications.

Analogue Outputs

The RH and T measured data is available on two analogue outputs for voltage (0 - 1 V, 0 - 5 V or 0 - 10 V) or current (4 - 20 mA). In addition, the HTP201 has a passive T output (4-wire), a wide temperature and supply voltage range, making it a universally applicable probe.



HTP201 voltage version with stainless steel enclosure and stainless steel sinter filter



HTP201 current version with cable, polycarbonat enclosure and metal grid filter

Features

Measurement performance

- High RH / T accuracy
- Excellent long term stability
- Wide T range: - 40...+80 °C (- 40...+176 °F)
- T compensation
- Very low self-heating

Mechanical construction

- Stainless steel or polycarbonate enclosure
- Encapsulated electronics
- IP65



E+E RH / T sensing element

- Protected by E+E proprietary coating
- Patented sensor technology
- Sealed solder pads
- Very robust

Outputs

- Two analogue outputs
- 0 - 1 / 5 / 10 V
- 4 - 20 mA
- T passive output optional

Connection

- M12x1 Connector
- Flexible cable with
  1.5 / 3 / 5 m (4.9 / 9.8 / 16.4 ft)

Features

Protective Sensor Coating

The E+E proprietary sensor coating is a protective layer applied to the active surface of the sensing element. The coating substantially extends sensor lifetime and ensures optimal measurement performance in corrosive environment (salts, off-shore applications). Additionally, it improves the sensors' long term stability in dusty, dirty or oily applications by preventing stray impedance caused by deposits on the active sensor surface.

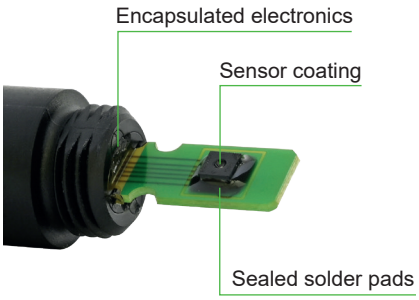

Sensing head with sensor coating and underfiller

Dimensions

Values in mm (inch)

Voltage versions

With connector (Type E9)

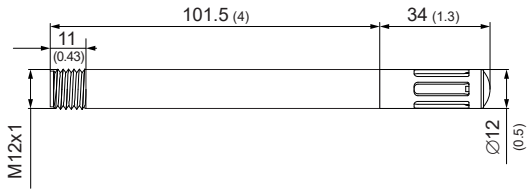

With cable (Type E8)

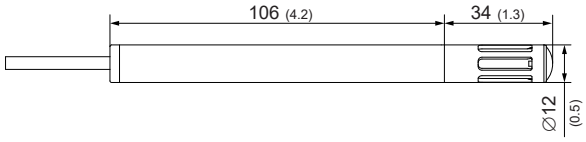

Current versions

With connector (Type E9)

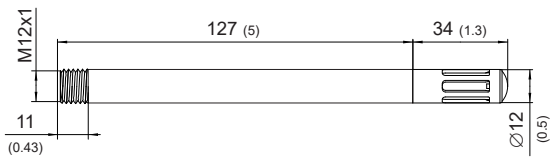

With cable (Type E8)

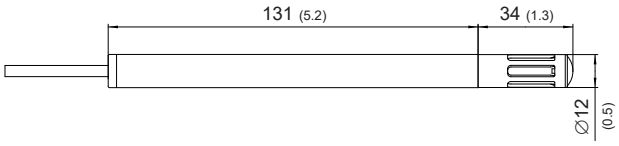

Technical Data

Measurands

Relative humidity (RH)

Measuring range	0...100 %RH
Accuracy[1)] @ 24 V DC, air velocity >0.2 m/s (>39 ft/min), incl. hysteresis, non-linearity and repeatability, current version R_L=250 Ω	
23 °C (0…100 %RH)	±2.5 %RH
0…40 °C (0…100 %RH)	±3 %RH
-20…80 °C (0…100 %RH)	±4 %RH
-40…-20 °C (0…100 %RH)	±5 %RH

1) Traceable to international standards, administrated by NIST, PTB, BEV,...
The accuracy statement includes the uncertainty of the factory calibration with an enhancement factor k=2 (2-times standard deviation).
The accuracy was calculated in accordance with EA-4/02 and with regard to GUM (Guide to the Expression of Uncertainty in Measurement).

Temperature (T)

Measuring range	-40...+80 °C (-40...+176 °F)
Accuracy Incl. hysteresis, non-linearity and repeatability	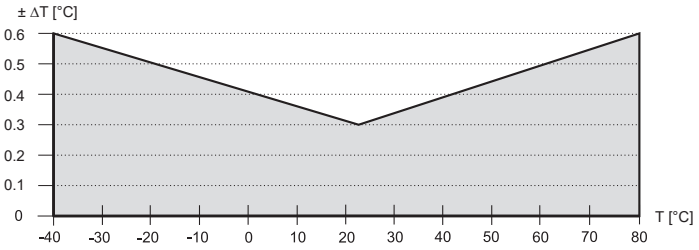

Outputs

Analogue

RH 0...100 % **T -40...+60/80 °C** (see ordering guide)			
Output	0 - 1 V	(-0.1 mA < I_L < 0.1 mA)	
Output	0 - 5 V	(-0.2 mA < I_L < 0.2 mA)	
Output	0 - 10 V	(-1.0 mA < I_L < 1.0 mA)	I_L = load current
Output	4 - 20 mA (2-wire)	R_L ≤ 500 Ω	R_L= load resistance

T Sensor Passive

With Model M6 only (RH + T passive)	4-wire-connection, T sensor according to ordering guide

Technical Data

General

Power supply class III USA & Canada: Class 2 supply necessary, max. voltage 30 V DC	
Output 0 - 1 V	3.6 - 30 V DC
Output 0 - 5 V	10 - 30 V DC
Output 0 - 10 V	15 - 30 V DC
Output 4 - 20 mA	9 V + R_L * 20 mA < V+ < 28 V DC — R_L= load resistance
Current consumption, typ.	
Voltage versions	1.5 mA
Current versions	According to output current
Electrical connection	
Plug versions	Plug M12x1, 4 poles
Cable versions	Cable 1.5 m (4.9 ft) / 3 m (9.8 ft) / 5 m (16.4 ft), PVC Ø4.3 mm, 4 x 0.25 mm² for RH + T with voltage output Ø4.3 mm, 3 x 0.25 mm² for RH + T with current output Ø4.8 mm, 6 x 0.14 mm² for RH + T passive with current output
Storage conditions	-40...+80 °C (-40...+176 °F) 0...95 %RH, non-condensing
Material	
Enclosure	Polycarbonate (PC) or stainless steel 1.4404
Probe cable (cable versions)	Polyvinyl chloride (PVC)
Protection rating	IP65
Electromagnetic compatibility[1)]	EN 61326-1 EN 61326-2-3 Industrial environment FCC Part15 Class B ICES-003 Class B
Shock and vibration	Tested according to EN 60068-2-64 and EN 60068-2-27
Conformity	CE UKCA

1) Analogue output 0 - 1 V is not protected against surge.

v1.1 / Modification rights reserved

Ordering Guide

	Feature	Description	Code		
			HTP201-		
Hardware Configuration	Model	RH + T	M1		-
		RH + T passive	-		M6
	Enclosure	Polycarbonate (PC)		No code	
		Stainless steel	HS2	-	
	Analogue output	0 - 1 V	A1	A1	-
		0 - 5 V	A2	A2	-
		0 - 10 V	A3	A3	-
		4 - 20 mA	-	A6	A6
	T sensor passive	Pt100 DIN A	-		TP1
		Pt1000 DIN A	-		TP3
		NTC10k, B3950 K	-		TP5
	Filter	Membrane, polycarbonate body	No code		
		Metal grid, polycarbonate body	F3		
		Stainless steel sintered	F4		
		Stainless steel - metal grid	F9	-	
	Electrical connection	Cable	E8		
		M12 connector, 4 poles	E9		-
	Connection cable length[1)]	1.5 m (4.9 ft)	KL150		
		3 m (9.8 ft)	KL300		
		5 m (16.4 ft)	KL500		
T Scale	T scaling low	-40 °C	No code		
	T scaling high	60 °C	No code		
		80 °C	SBH80		

1) Only in combination with the cable version

Order Example

HTP201-M1A3E8KL150

Feature	Code	Description
Model	M1	RH + T
Enclosure	No code	Polycarbonate (PC)
Analogue output	A3	0 - 10 V
Filter	No code	Membrane, polycarbonate body
Electrical connection	E8	Cable
Connection cable length	KL150	1.5 m (4.9 ft)
T scaling low	No code	-40 °C
T scaling high	No code	60 °C

v1.1 / Modification rights reserved

Order Example

HTP201-M1HS2A1F9E9SBH80

Feature	Code	Description
Model	**M1**	RH + T
Enclosure	**HS2**	Stainless steel
Analogue output	**A1**	0 - 1 V
Filter	**F9**	Stainless steel - metal grid
Electrical connection	**E9**	M12 connector, 4 poles
T scaling low	**No code**	-40 °C
T scaling high	**SBH80**	80 °C

Accessories

For further information see datasheet Accessories.

Accessories	Code
M12x1 connector, 4 pole socket, for self assembly	**HA010707**
Connection cable, 5 pole, M12x1 plug / socket, shielded, 2 m (6.6 ft) / 5 m (16.4 ft) /10 m (32.8 ft)	**HA010816/HA010817/HA010818**
Connection cable, 5 pole, M12x1 socket / free ends, shielded, 1.5 m (4.9 ft) / 5 m (16.4 ft) / 10 m (32.8 ft)	**HA010819/HA010820/HA010821**
Plastic mounting flange Ø12 mm (0.47") black	**HA010214**
Stainless steel flange Ø12 mm	**HA010201**
Wall mounting clip Ø12 mm (0.47")	**HA010211**
Stainless steel wall mounting clip Ø12 mm (0.47")	**HA010225**
Protection cap for Ø12 mm (0.47") probe	**HA010783**
Radiation shield with fixed clamping ring (M20x1.5)	**HA010502**

v1.1 / Modification rights reserved

Company Headquarters &
Production Site

E+E Elektronik Ges.m.b.H.
Langwiesen 7
4209 Engerwitzdorf | Austria
T +43 7235 605-0
F +43 7235 605-8
info@epluse.com
www.epluse.com

Subsidiaries

E+E Sensor Technology (Shanghai) Co., Ltd.
T +86 21 6117 6129
info@epluse.cn

E+E Elektronik France SARL
T +33 4 74 72 35 82
info.fr@epluse.com

E+E Elektronik Deutschland GmbH
T +49 6171 69411-0
info.de@epluse.com

E+E Elektronik India Private Limited
T +91 990 440 5400
info.in@epluse.com

E+E Elektronik Italia S.R.L.
T +39 02 2707 86 36
info.it@epluse.com

E+E Korea Co., Ltd.
T +82 31 732 6050
info.kr@epluse.com

E+E Elektronik Corporation
T +1 847 490 0520
info.us@epluse.com

your partner
in sensor
technology.

Version v1.1 | 10-2022
Modification rights reserved

www.epluse.com

Cleaning Instructions

E+E Humidity Measuring Devices with Sensing Probe

your partner in sensor technology.

For the good long term performance of humidity measuring devices it is of highest importance that the sensing head is kept clean. For most applications choosing the appropriate filter cap is sufficient to achieve this.

In polluted applications the filter cap might get clogged. Long response time of the device indicates a dirty filter cap, which shall be replaced by an E+E original new one. Please see the choice of E+E filter caps in the Accessories data sheet at http://www.epluse.com/fileadmin/data/product/accessories/datasheet_accessories.pdf and contact your E+E sales representative for advice.

In certain applications even the correct choice of filter cap cannot stop all pollutants from getting inside the sensing head. Deposits of dirt or dust inside the sensing head can lead to wrong measurements results, mostly by acting like a low parallel impedance on the sensing elements. Such effects are usually stronger in applications with high humidity. In such situations the sensing head can be cleaned by the user.

PLEASE NOTE

- The E+E proprietary sensor coating offers additional protection of the sensing head and it is highly recommended in heavy polluted applications. Please contact the E+E sales representative for details.
- The cleaning procedure described below is efficient against pollution deposits such as dirt and dust. It is not appropriate for humidity sensing elements affected by chemicals, such as aggressive gases. Please contact E+E in case of sensors exposed to chemical agents.
- The cleaning procedure is appropriate for sensing elements with or without the E+E sensor coating.

Instructions for Humidity Sensors

1. Disconnect the device from the power supply.
2. Wipe clean the probe for preventing contamination of the sensing head with pollutants possibly deposited on the exterior of the probe. Use a clean soft cloth, wet or dry depending on the deposits on the probe. Wipe clean also the other parts of the device. Depending on the type, these can be the enclosure with electronics and the probe cable.

NOTICE

- Use only water and/or isopropyl alcohol for cleaning the probe and the other parts of the device. Other cleaning agents might affect the sensing elements.
- Do not attempt to clean the filter cap. This would only lead to its clogging. A dirty filter cap must be replaced by a new, original one, at the end of the cleaning process.

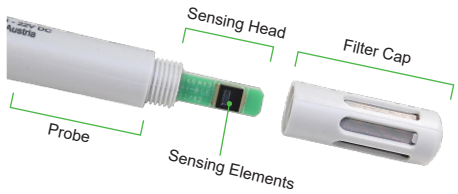

3. Remove (unscrew) the filter cap with utmost care, so that the filter cap does not touch at any time the sensing elements of the sensing head.

NOTICE

- Do never touch the sensing elements.
- Any attempt to clean mechanically the sensing elements such as rubbing or brushing leads certainly to their irreversible damage.

4. Place two glass vessels in the tray of an ultrasonic cleaner, one with clean Isopropyl alcohol and the other with clean deionized water. Then fill the tray of the ultrasonic cleaner with tap water up to the maximum level mark.





Fig. 1 Sensing head in isopropyl alcohol

5. Hold onto the sensing probe and place the sensing head in isopropyl alcohol for 3 minutes (Fig. 1). The sensing element, the leads and the sensor socket shall be immersed in the liquid.
   In case of heavy pollution, as in case of deposits which can be seen with the bare eye, continue this until the deposits are dissolved.

NOTICE

The sensing elements may not touch the vessels!

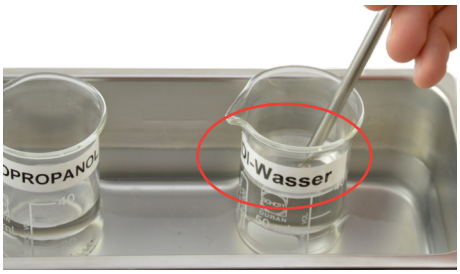

Fig. 2 Sensing head in deionized water

6. Hold onto the sensing probe and place the sensing head in deionized water for 3 minutes. (Fig. 2).
7. Let the sensing head dry free for about 30 minutes at room condition temperature.
8. Make sure by optical inspection that there are not water droplets on any part of the sensing head.
   Place on a new, original filter cap. This must be done with utmost care not to touch the sensing elements.
   For the choice of spare filter caps see accessories data sheet at
   http://www.epluse.com/fileadmin/data/product/accessories/datasheet_accessories.pdf.

NOTICE

Never reuse the old filter cap after cleaning the sensing head.

9. For each device to be cleaned use new clean isopropyl alcohol and deionized water, as well as clean glass vessels.

NOTICE

Do not reuse the isopropyl alcohol and the deionized water for cleaning a second sensor.

PLEASE NOTE

Best cleaning results are achieved by using an ultrasonic cleaner as described above. In case this is not available, perform the entire procedure without it, shaking gently the probe when placed in isopropyl alcohol and in deionized water.

E+E Moisture in Oil Measuring Devices with Sensing Probe

Cleaning of probe head including sensing elements from oil residue is recommended before they are immersed in other oil, prior to longer idle times in air or before calibration.

Intructions for Moisture in Oil Sensors

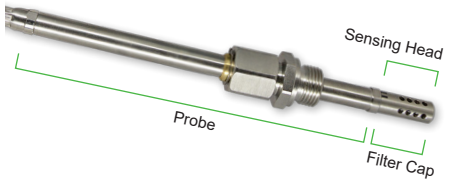

1. Disconnect the device from the power supply.
2. Immerse the measuring head in n-HEPTAN and swirl for approx. 30 seconds. Repeat this procedure in case the sensor is polluted heavily and exchange the n-HEPTAN if necessary.
3. Flush with tap water and air dry for about 30 minutes. If the contamination inside the filter cap is too strong, remove the filter cap and clean by proceeding as follows:
   - Remove the filter cap's screw lock with the help of a small screw driver.
   - Take off the filter cap and clean the sensing head as described above.
   - Replace the filter cap by a new one.
   - Fix the screw lock by pressing it towards the thread.

NOTICE

- Do not touch or rub the sensing element during the cleaning process!
- It is strongly advised NOT to try cleaning the sensor by mechanical means, such as rubbing the sensor with cotton material!

Slight oil streaks on the sensor element surface are considered to be clean.

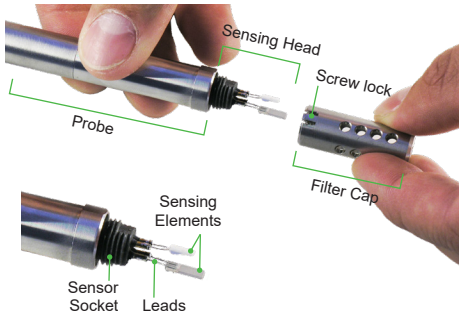

EXPERT ADVICE

For keeping the calibration equipment free from oil contamination, clean the sensing head with n-HETPAN in an ultrasonic cleaner for 3 minutes. If necessary also replace the filter cap by a new one.

E+E Elektronik Ges.m.b.H.
Langwiesen 7
4209 Engerwitzdorf | Austria
T +43 7235 605-0
F +43 7235 605-8
info@epluse.com
www.epluse.com

User Manual

HTP201

Humidity and Temperature Probe with Analogue Outputs

YOUR PARTNER IN SENSOR TECHNOLOGY

ELEKTRONIK® Ges.m.b.H.

BA_HTP201 // v1.0 // Modification rights reserved

E+E Elektronik Ges.m.b.H. doesn‘t accept warranty and liability claims neither upon this publication nor in case of improper treatment of the described products.

The document may contain technical inaccuracies and typographical errors. The content will be revised on a regular basis. These changes will be implemented in later versions. The described products can be improved and changed at any time without prior notice.

© Copyright E+E Elektronik Ges.m.b.H. All rights reserved.

EMC note USA (FCC):

This equipment has been tested and found to comply with the limits for a Class A digital device, pursuant to part 15 of the FCC Rules. These limits are designed to provide reasonable protection against harmful interference when the equipment is operated in a commercial environment. This equipment generates, uses, and can radiate radio frequency energy and, if not installed and used in accordance with the instruction manual, may cause harmful interference to radio communications. Operation of this equipment in a residential area is likely to cause harmful interference in which case the user will be required to correct the interference at his own expense.

EMC note Canada (ICES-003):

CAN ICES-3 (A) / NMB-3 (A)

CONTENT

1 General 4
- 1.1 Explanation of Symbols 4
- 1.2 Safety Instructions 4
  - 1.2.1 General Safety Instructions 4
  - 1.2.2 Intended Use 4
  - 1.2.3 Mounting, Start-up and Operation 5
- 1.3 Environmental Aspects 5

2 Scope of Supply 5

3 Product Description 5
- 3.1 General 5
- 3.2 Dimensions 6
- 3.3 Electrical Connection 7
  - 3.3.1 M1 Models (RH + T) 7
  - 3.3.2 M6 Models (RH + T passive) 8

4 Installation 8
- 4.1 Wall and Ceiling Mount 8
- 4.2 Duct Mount 8
- 4.3 Recommendations for accurate Humidity and Temperature Measurement 8

5 Maintenance and Service 9
- 5.1 Cleaning 9
- 5.2 Filter Cap Replacement 9
- 5.3 Protection during Site Cleaning Operations 10
- 5.4 Repairs 10
- 5.5 Spare Parts 10

6 Accessories 10

7 Technical Data 11

1 General

This user manual serves for ensuring proper handling and optimal functioning of the device. The user manual shall be read before commissioning the equipment and it shall be provided to all staff involved in transport, installation, operation, maintenance and repair. The user manual may not be used for the purposes of competition without the written consent of E+E Elektronik® and may not be forwarded to third parties. Copies may be made for internal purposes. All information, technical data and diagrams included in these instructions are based on the information available at the time of writing.

Please find this document and further product information on our website at www.epluse.com/htp201.

1.1 Explanation of Symbols

This symbol indicates safety information.
It is essential that all safety information is strictly observed. Failure to comply with this information can lead to personal injuries or damage to property. E+E Elektronik® assumes no liability if this happens.

This symbol indicates instructions.
The instructions shall be observed in order to reach optimal performance of the device.

1.2 Safety Instructions

1.2.1 General Safety Instructions

- Avoid any unnecessary mechanical stress and inappropriate use.
- When replacing the filter cap make sure not to touch the sensing elements.
- The device must be operated with the filter cap on at all times.
- Installation, electrical connection, maintenance and commissioning shall be performed by qualified personnel only.
- Use the HTP201 only as intended and observe all technical specifications.
- Do not use HTP201 in explosive atmosphere or for measurement of aggressive gases.

1.2.2 Intended Use

The HTP201 is intended for highly accurate and cost effective humidity (RH) and temperature (T) measurement in demanding process applications. The RH and T measured data is available on two analogue outputs for voltage (0 - 1 V, 0 - 5 V or 0 - 10 V) or current (4 - 20 mA, 2-wire). In addition, the HTP201 has a passive T output (4-wire), a wide temperature and supply voltage range, making it a universally applicable probe.

The use of the HTP201 in any other way than described in this manual bears a safety risk for people and the entire measurement installation and is therefore not allowed.
The manufacturer cannot be hold responsible for damages as a result of incorrect handling, installation, and maintenance of the equipment.

In order to avoid damage to the instrument or health hazards, the measuring equipment must never be manipulated with tools that are not specifically described in this manual.

The sensor may only be utilized in accordance with the conditions defined in the technical data. Otherwise, measurement inaccuracies will occur and equipment failures cannot be ruled out.

The steps recommended by the manufacturer for installation, inspections and maintenance work must be observed and carried out for the safety of the user and for the functionality of the equipment.

Unauthorized product modification leads to loss of all warranty claims. This may be accomplished only with an explicit permission of E+E Elektronik®!

1.2.3 Mounting, Start-up and Operation

The HTP201 humidity and temperature probe has been produced under state of the art manufacturing conditions, has been thoroughly tested and has left the factory fulfilling all safety criteria. The manufacturer has taken all precautions to ensure safe operation of the device. The user must ensure that the device is set up and installed in a manner that does not have a negative effect on its safe use.

The user is responsible for observing all applicable safety guidelines, local and international, with respect to safe installation and operation on the device. This user manual contains information and warnings that must be observed by the user in order to ensure safe operation.

- Mounting, start-up, operation and maintenance of the device may be performed by qualified staff only. Such staff must be authorized by the plant operator to carry out the mentioned activities.
- The qualified staff must have read and understood this user manual and must follow the instructions contained within.
- All process and electrical connections shall be thoroughly checked by authorized staff before putting the device into operation.
- Do not install or start-up a device supposed to be faulty. Make sure that such devices are not accidentally used by marking them clearly as faulty.
- A faulty device may only be investigated and possibly repaired by qualified, trained and authorized staff. If the fault cannot be fixed, the device shall be removed from the process.
- Service operations other than described in this user manual may only be performed by the manufacturer.

Disclaimer of Liability
The manufacturer or their delegated representative is only liable in case of intent or gross negligence. The accountability is limited to the value of the order issued at the time to the manufacturer. The manufacturer is not liable for damages, originated from disregarding the safety instructions or violating the instructions of the manual or operating conditions. Consequential damages are excluded from any liability.

1.3 Environmental Aspects



Products from E+E Elektronik® are developed and manufactured observing of all relevant requirements with respect to environment protection. Please observe local regulations for the device disposal.



For disposal, the individual components of the device must be separated according to local recycling regulations. The electronics shall be disposed of correctly as electronics waste.

2 Scope of Supply

- HTP201 – Humidity and Temperature Probe with Analogue Outputs according to ordering code

3 Product Description

3.1 General

The HTP201 is a robust probe for relative humidity and temperature measurement. Its IP65 rating, the E+E proprietary protective sensor coating and encapsulated electronics make it ideal for highest requirements. The HTP201 is typically implemented in demanding process and climate control applications like in agriculture, life stock, food, pharma or clean rooms. Its stainless steel or polycarbonate enclosure and integrated cable or a threaded connector together with the wide choice of filter caps make it a versatile probe tackling even challenging applications. Installation is simplified by various mounting options which are supported by E+E accessories.

3.2 Dimensions

Voltage versions

With connector (Type E9)

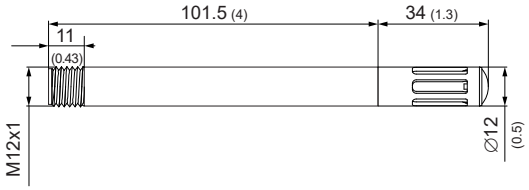

With cable (Type E8)

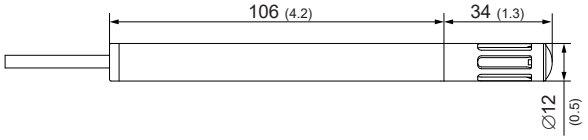

Current versions

With connector (Type E9)

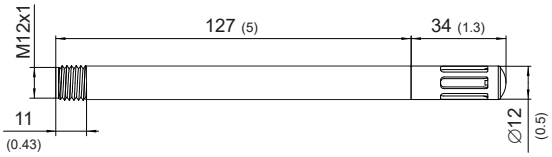

With cable (Type E8)

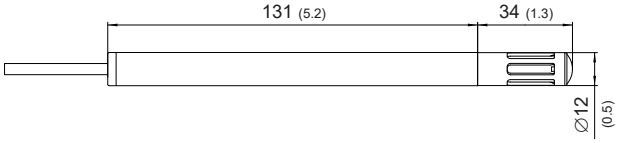

Fig. 1 Dimensions of HTP201 in mm (inch)

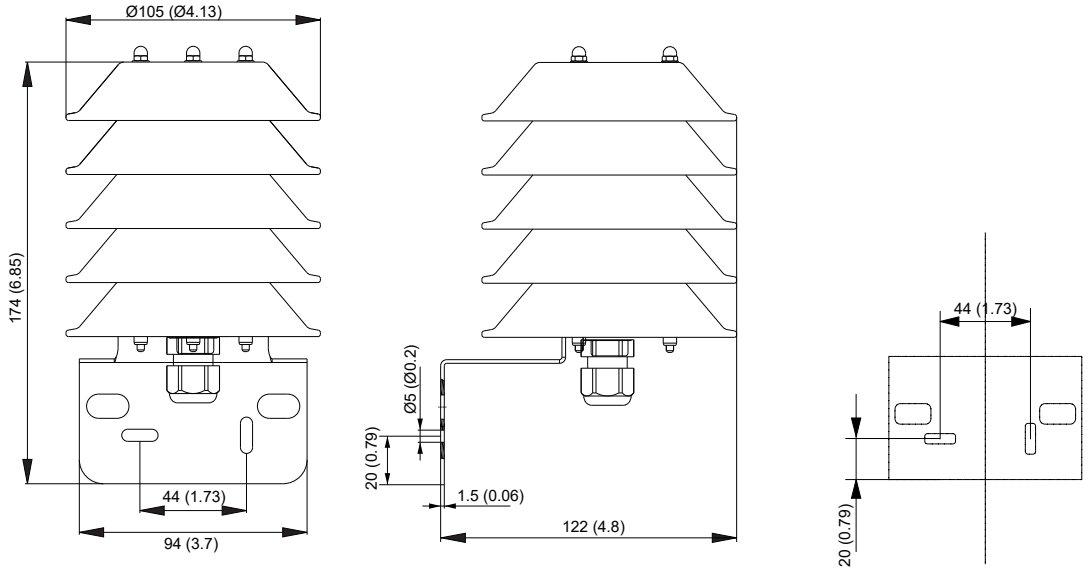

Fig. 2 Dimensions of optional radiation shield (ordering code HA010502) in mm (inch)

3.3 Electrical Connection

Important note:
The manufacturer cannot be held responsible for personal injuries or damage to property as a result of incorrect handling, installation, wiring, power supply and maintenance of the device.

3.3.1 M1 Models (RH + T)

Voltage versions (A1/A2/A3)
With connector (HTP201-M1xE9x)



M12 device plug
front view

Pin number	Function
1	Supply voltage V+
2	RH
3	GND
4	T

With cable (HTP201-M1xE8x)

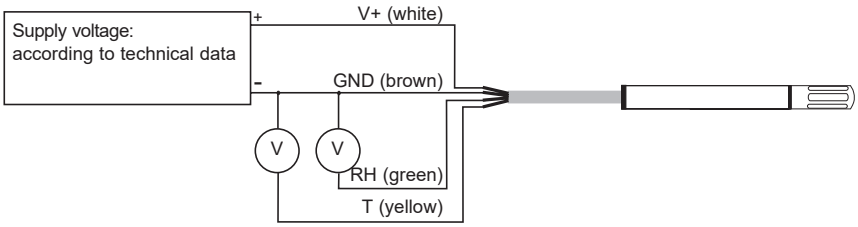

Current version (A6)
With connector (HTP201-M1A6xE9)

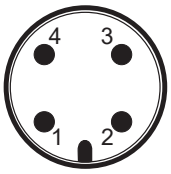

M12 device plug
front view

Pin number	Function
1	Supply voltage V+
2	RH
3	not connected
4	T

With cable (HTP201-M1A6xE8x)

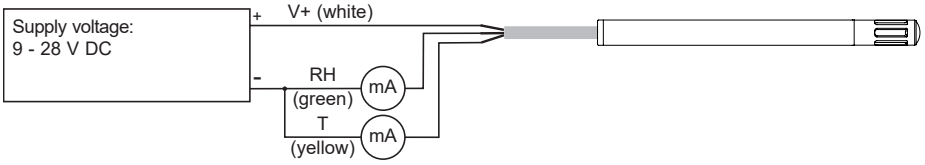

3.3.2 M6 Models (RH + T passive)

Current version (A6)
With connector (HTP201-M6A6xE8x)

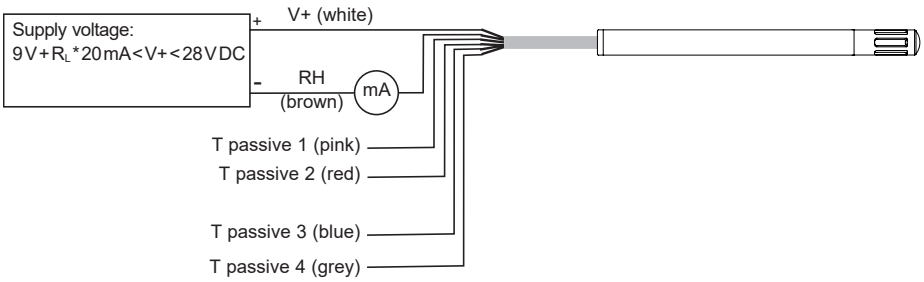

4 Installation

4.1 Wall and Ceiling Mount

Best measurement performance is achieved when the entire probe is located inside the environment to be monitored.
In such a case, the HTP201 may be for instance fixed onto a wall with the mounting clip HA010211 (for polycarbonate) or HA010225 (for stainless steel, both not included in the scope of supply, see data sheet “Accessories”), or freely hang from the ceiling on the connection cable.



Fig. 3 Optional wall and ceiling mount (ordering code HA010211)

4.2 Duct Mount

The probe also can be installed into a duct using the plastic flange HA010214 or the stainless steel flange HA010201 (not included in the scope of supply, see data sheet “Accessories”).



Fig. 4 Optional plastic flange (ordering code HA010214)



Fig. 5 Optional stainless steel flange (ordering code HA010201)

4.3 Recommendations for accurate Humidity and Temperature Measurement

- In case the HTP201 probe is not entirely located in the environment to be monitored, large temperature differences along the probe will lead to temperature gradients. These will have an influence on the accuracy. Therefore, it is of paramount importance to minimize the temperature gradients. The biggest part of the probe shall be located in the target environment and the rest shall be thermally well insulated.

- For outdoor applications the HTP201 shall be equipped with a radiation shield (HA010502) which provides protection from rain, snow and ice. This also causes a natural ventilation which largely prevents overheating of the probe in the sun and thus a distortion of the measured values.

- Best accuracy is achieved with a velocity of min. 0.2 m/s of the air surrounding the probe. Depending on the installation position, flow direction and flow velocity, the accuracy may decline. The following table gives a concise overview. Please note that the vertical positioning with the sensing element upside is the most sensitive one concerning accuracy. Because of possible self heating due to the sensor electronics, it is crucial to have the indicated air flow velocity.

Flow direction of medium		
←	> 0.2 m/s	> 0.2 m/s
→	This type of mounting is not recommended	> 0.2 m/s
↑	> 0.2 m/s	This type of mounting is not recommended
↓	> 0.2 m/s	> 0.2 m/s

Tab. 1 Mounting position, air velocity and accuracy

5 Maintenance and Service

HTP201 does not require any special maintenance, nevertheless for high accurate measurements especially over wide RH and T ranges it is recommended to calibrate the probe every 12 months. If needed, the enclosure or the sensing element may be cleaned as described below.

5.1 Cleaning

Use a damp soft cloth to remove deposits of dust or dirt from the exterior of the probe. Do not use any solvents or abrasive cleaning agents.

In case of dusty, oily and polluted environment:
- Use a damp soft cloth to remove deposits of dust or dirt from the exterior of the probe. Do not use any solvents or abrasive cleaning agents.
- The filter cap shall be replaced once in a while with an E+E original one (see below).
- If needed, the sensing element of the humidity probe can be cleaned by the user (see cleaning instructions - www.epluse.com/cleaning-instructions).

5.2 Filter Cap Replacement

In a dusty or polluted environment it might be necessary to replace the filter cap once in a while. In most of the cases, a clogged filter shows visible contamination or dirt. Longer response time of the humidity measurement also indicates a clogged filter cap. In such cases, replace the filter by a new, original one, see chapter 5.5 Spare Parts.

Procedure
- Turn the filter cap counter-clockwise for removing it.
- Install the new filter cap finger tight by turning it clockwise.

While replacing the filter cap take very good care to not touch or rub the sensing element.

5.3 Protection during Site Cleaning Operations

During site cleaning or sterilization process, if the HTP201 remains on the measuring site the sensing head can be protected with the optional protection cap for 12 mm (0.47") probe (HA010783, see datasheet “Accessories”).
In case the probe is removed from the site, it is recommended to apply the protection cap for the M12 cable socket (HA010781) and the one for the HTP201 M12 plug of (HA010782).



Fig. 6 Protection cap for Ø12 mm (0.47") probe (ordering code HA010783)



Fig. 7 Protection cap for M12 socket (ordering code HA010781)



Fig. 8 Protection cap for M12 plug (ordering code HA010782)

5.4 Repairs

Repairs may be carried out by the manufacturer only. The attempt of unauthorized repair excludes any warranty claims.

5.5 Spare Parts

Description	Order code
Filter caps for probes with Ø12 mm	**Please refer to the datasheet “Accessories“**

6 Accessories

For further information see datasheet Accessories.

General	Order code
M12x1 connector, 4 pole socket, for self assembly	**HA010707**
Connection cable, 5 pole, M12x1 plug / socket, shielded, 2 m (6.6 ft) / 5 m (16.4 ft) /10 m (32.8 ft)	**HA010816/HA010817/ HA010818**
Connection cable, 5 pole, M12x1 socket / free ends, shielded, 1.5 m (4.9 ft) / 5 m (16.4 ft) / 10 m (32.8 ft)	**HA010819/HA010820/ HA010821**
Plastic mounting flange Ø12 mm (0.47") black	**HA010214**
Stainless steel flange Ø12 mm	**HA010201**
Plastic wall mounting clip Ø12 mm (0.47")	**HA010211**
Stainless steel wall mounting clip Ø12 mm (0.47")	**HA010225**
Protection cap for Ø12 mm (0.47") probe	**HA010783**
Protection cap for M12 socket	**HA010781**
Protection cap for M12 plug	**HA010782**
Radiation shield with fixed clamping ring (M20x1.5)	**HA010502**

7 Technical Data

Measurands

Relative humidity (RH)

Measuring range	0...100 %RH
Accuracy[1)] @ 24 V DC, air velocity >0.2 m/s (>39 ft/min), incl. hysteresis, non-linearity and repeatability, current version R_L=250 Ω	
23 °C (0…100 %RH)	±2.5 %RH
0…40 °C (0…100 %RH)	±3 %RH
-20…80 °C (0…100 %RH)	±4 %RH
-40…-20 °C (0…100 %RH)	±5 %RH

1) Traceable to international standards, administrated by NIST, PTB, BEV,...
The accuracy statement includes the uncertainty of the factory calibration with an enhancement factor k=2 (2-times standard deviation).
The accuracy was calculated in accordance with EA-4/02 and with regard to GUM (Guide to the Expression of Uncertainty in Measurement).

Temperature (T)

Measuring range	-40...+80 °C (-40...+176 °F)
Accuracy Incl. hysteresis, non-linearity and repeatability	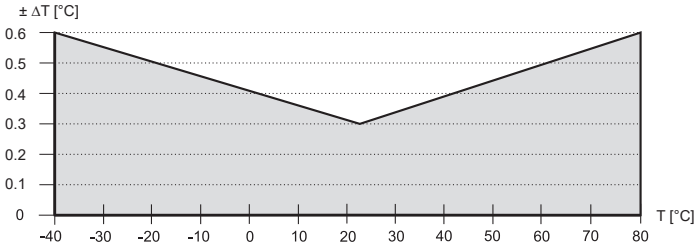

Outputs

Analogue

RH 0...100 % **T -40...+60/80 °C** (see ordering guide)			
Output	0 - 1 V	(-0.1 mA < I_L < 0.1 mA)	
Output	0 - 5 V	(-0.2 mA < I_L < 0.2 mA)	
Output	0 - 10 V	(-1.0 mA < I_L < 1.0 mA)	I_L = load current
Output	4 - 20 mA (2-wire)	R_L ≤ 500 Ω	R_L= load resistance

T Sensor Passive

With Model M6 only (RH + T passive)	4-wire-connection, T sensor according to ordering guide

General

Power supply class III USA & Canada: Class 2 supply necessary, max. voltage 30 V DC	
Output 0 - 1 V	3.6 - 30 V DC
Output 0 - 5 V	10 - 30 V DC
Output 0 - 10 V	15 - 30 V DC
Output 4 - 20 mA	9 V + R_L * 20 mA < V+ < 28 V DC — R_L= load resistance
Current consumption, typ.	
Voltage versions	1.5 mA
Current versions	According to output current
Electrical connection	
Plug versions	Plug M12x1, 4 poles
Cable versions	Cable 1.5 m (4.9 ft) / 3 m (9.8 ft) / 5 m (16.4 ft), PVC Ø4.3 mm, 4 x 0.25 mm² for RH + T with voltage output Ø4.3 mm, 3 x 0.25 mm² for RH + T with current output Ø4.8 mm, 6 x 0.14 mm² for RH + T passive with current output
Storage conditions	-40...+80 °C (-40...+176 °F) 0...95 %RH, non-condensing
Material	
Enclosure	Polycarbonate (PC) or stainless steel 1.4404
Probe cable (cable versions)	Polyvinyl chloride (PVC)
Protection rating	IP65
Electromagnetic compatibility[1)]	EN 61326-1 — EN 61326-2-3 — Industrial environment FCC Part15 Class B — ICES-003 Class B
Shock and vibration	Tested according to EN 60068-2-64 and EN 60068-2-27
Conformity	CE UKCA

1) Analogue output 0 - 1 V is not protected against surge.



HEADQUARTERS

E+E Elektronik Ges.m.b.H.
Langwiesen 7
4209 Engerwitzdorf
Austria
Tel.: +43 7235 605-0
E-mail: info@epluse.com
Web: www.epluse.com

SUBSIDIARIES

E+E Elektronik China
18F, Kaidi Financial Building,
No.1088 XiangYin Road
200433 Shanghai
Tel.: +86 21 6117 6129
E-mail: info@epluse.cn

E+E Elektronik France
47 Avenue de l'Europe
92310 Sèvres
Tel.: +33 4 74 72 35 82
E-mail: info@epluse.fr

E+E Elektronik Germany
Obere Zeil 2
61440 Oberursel
Tel.: +49 6171 69411-0
E-mail: info@epluse.de

E+E Elektronik India
801, Sakhi Vihar Road
400072 Mumbai
Tel.: +91 990 440 5400
E-mail: info.in@epluse.com

E+E Elektronik Italy
Via Alghero 17/19
20128 Milano (MI)
Tel.: +39 02 2707 86 36
E-mail: info@epluse.it

E+E Elektronik Korea
Suite 2001, Heungdeok IT
Valley Towerdong, 13,
Heungdeok 1-ro, Giheung-gu
16954 Yongin-si, Gyeonggi-do
Tel.: +82 31 732 6050
E-mail: info@epluse.co.kr

E+E Elektronik USA
333 East State Parkway
Schaumburg, IL 60173
Tel.: +1 847 490 0520
E-mail: office@epluse.com

HD3910.1 – HD3910.2
Probes for soil volumetric water content measurement

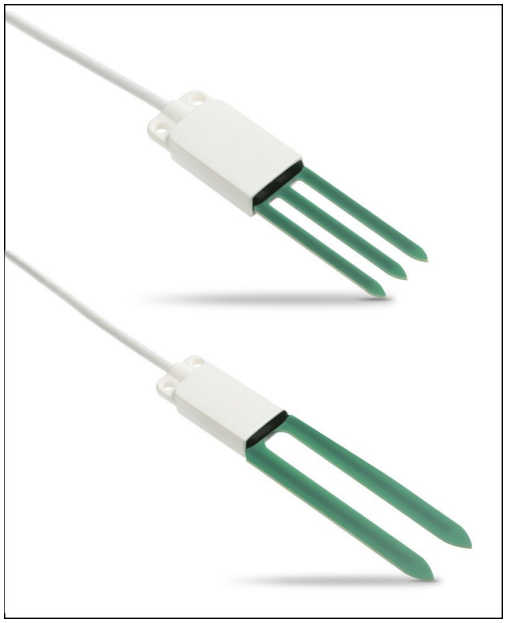

- Measurement of the soil volumetric water content with 2 electrodes (**HD3910.1**) or 3 electrodes (**HD3910.2**) for restricted volumes
- Measurement of the soil temperature
- Various output options available (depending on model): digital RS485 with MODBUS-RTU protocol, digital SDI-12 or analog voltage
- Accurate and stable measure over time
- Degree of protection IP 67
- Minimal invasiveness in the soil
- Easy to install

APPLICATION

- Agriculture
- Hydrology
- Geology

DESCRIPTION

The probes **HD3910.1** (two electrodes) and **HD3910.2** (three electrodes) measure the soil volumetric water content (VWC) by using a capacitive measurement principle which allows fast measurements in the field and with minimal invasiveness.

The three-electrode probe **HD3910.2** is particularly suitable for the measurement in small volumes, for example for cultivations in pots.

The probes are factory-calibrated and do not require any further calibration by the end user.

The circuit board is protected inside a housing made of plastic material and sealed with epoxy resin which allows achieving reliable measurements even in harsh environmental conditions.

The version with **RS485** digital output with **MODBUS-RTU** protocol allows the use of even very long connection cables. It can be connected to the data loggers HD32MT.1 and HD32MT.3 or to any other data logger with RS485 MODBUS-RTU input.

The version with **SDI-12** digital output is compatible with version 1.3 of the protocol and can be connected to the data logger HD32MT.3 or to any other data logger with SDI-12 input.

The version with analog output has two 0.5…3 V standard voltage outputs: one for the volumetric water content and one for the temperature. On request, 0…2.5 V, 0…5 V or 0…10 V outputs.

The probes are equipped with a fixed cable, 5 or 10m standard length, with open wires at the end.

VOLUMETRIC WATER CONTENT

The moist soil is composed of a solid part (minerals), a liquid part (generally water) and a gaseous part (air, water vapor).

The Volumetric Water Content (VWC) is defined as the ratio between the volume occupied by the water (V_w) in a certain portion of the soil and the total volume of the soil portion (V):

$$VWC = \frac{Vw}{V}$$

It can also be expressed as a percentage (% VWC) of the water volume in the total volume.

The volumetric water content is a parameter used in hydrology for the study of the hydraulic properties of the soil, and in agriculture to determine the need to irrigate crops.

TECHNICAL SPECIFICATIONS

Volumetric water content	
Measuring principle	Capacitive
Measuring range	0…60% VWC
Resolution	0.1%
Accuracy (@ 23 °C)	± 3 % between 0 and 50% VWC (standard mineral soil, EC < 5 mS/cm)
Measuring volume	∅= 100 mm x H=150 mm for the 2-electrode probe ∅= 80 mm x H=110 mm for the 3-electrode probe
Sensor operating temperature	-40…+60°C
Temperature	
Sensor	NTC 10 kΩ @ 25°C
Measuring range	-40…+60°C
Resolution	0.1°C
Accuracy	± 0.5°C
Long-term stability	0.1°C / year
Power supply	3.6…30 Vdc for versions with 0…2.5 V analog output 5…30 Vdc for versions with RS485 output and versions with 0.5…3 V analog output 6…30 Vdc for versions with SDI-12 output 7…30 Vdc for versions with 0…5 V analog output 12…30 Vdc for versions with 0…10 V analog output
Consumption	*Versions with RS485 output:* 2 mA average / 15 mA peak @ 12 Vdc *Versions with analog output:* 2.5 mA average / 15 mA peak @ 12 Vdc *Versions with SDI-12 output:* 300 µA @ 12 Vdc in standby <15 mA @ 12 Vdc during measurement
Output	Depending on model: • RS485 with MODBUS-RTU protocol • SDI-12 • 0.5…3 V analog voltage (0.5 V=0 %VWC or -40 °C , 3 V=60 %VWC or +60 °C, minimum load resistence 10 kΩ)
Materials	Handle: thermoplastic material and epoxy resin Electrodes: epoxy glass, thickness 2 mm
Connection	Fixed cable with open wires at the end, length 5 or 10 m standard
Protection degree	IP 67
Weight	150 g approx. (including the 5 m cable)

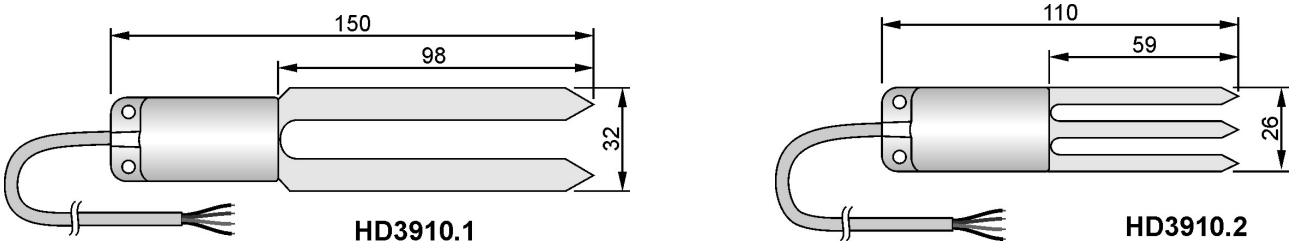

Fig. 1: dimensions (mm)

INSTALLATION

By means of an accessory, perform a hole into the soil deep enough to accommodate the probe. Never use the probe to make the hole in the soil, in order to avoid mechanical damage to the probe itself.

Once the hole was done, insert the probe **completely** into the soil so that the entire handle is covered by the ground: the temperature sensor is located inside the handle, close to the electrodes; therefore, it is necessary that the handle is immersed in the soil for a correct detection of the temperature.

After the introduction of the probe, fill in the empty spaces between the soil and the probe with some soil made powder. To obtain accurate measurements, the soil should be in contact with the electrodes and the probe handle.

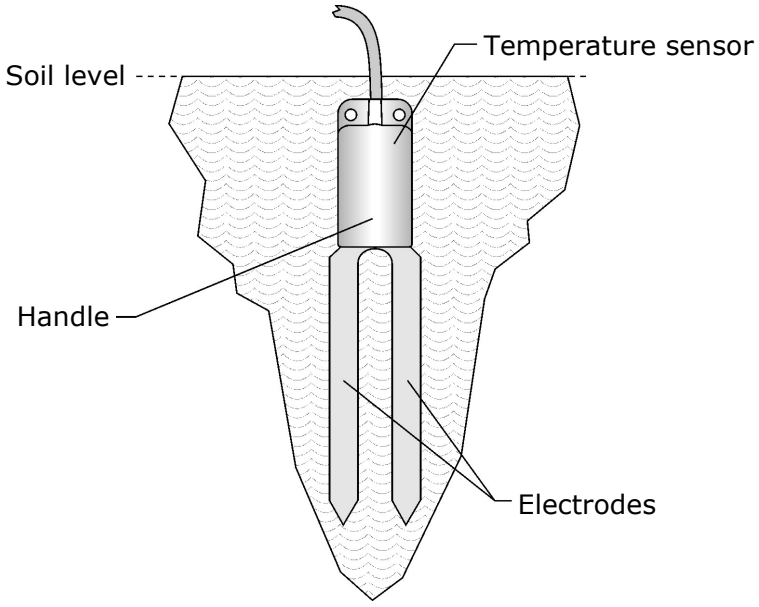

Fig. 2: Installation

The probe can be oriented in any direction, but it is advisable to place it vertically into the ground, so to not hinder the flow of water downward and to minimize the influence of the probe in the soil behavior.

Warnings:

- The portion of soil in which the probe is inserted must be uniform, without air gaps, and not too compact as it would make the introduction of the probe difficult.
- Pay attention to the presence of roots, stones or other objects present in the subsurface that may come between the electrodes and affect the measure.
- Do not use excessive force when introducing the probe, so to avoid irreparable damage to the electrodes.
- The probe measures the water content of the soil volume immediately surrounding the electrodes: position the probe so that there are no objects close to the probe, such as metal poles for example, that may affect the field of action of the probe itself.
- Indicate the presence of the probe during the maintenance operations of the soil (e.g. lawn mowing, ploughing, mechanized harvesting, etc.).
- In order to remove the probe from the soil, grab the handle and pull it upwards. **During the extraction, remove the probe vertically, by avoiding tilt that would damage the electrodes.**
- **Do not remove the probe by pulling the cable.**

CONNECTIONS

Wire color	Function		
	RS485 output	**SDI-12 output**	**Analog output**
Black	Negative power supply	Negative power supply/output	Negative power supply/output
Red	Positive power supply	Positive power supply	Positive power supply
White	RS485 A/-	Positive SDI-12 output	Positive %VWC output
Green	RS485 B/+	---	Positive temperature output

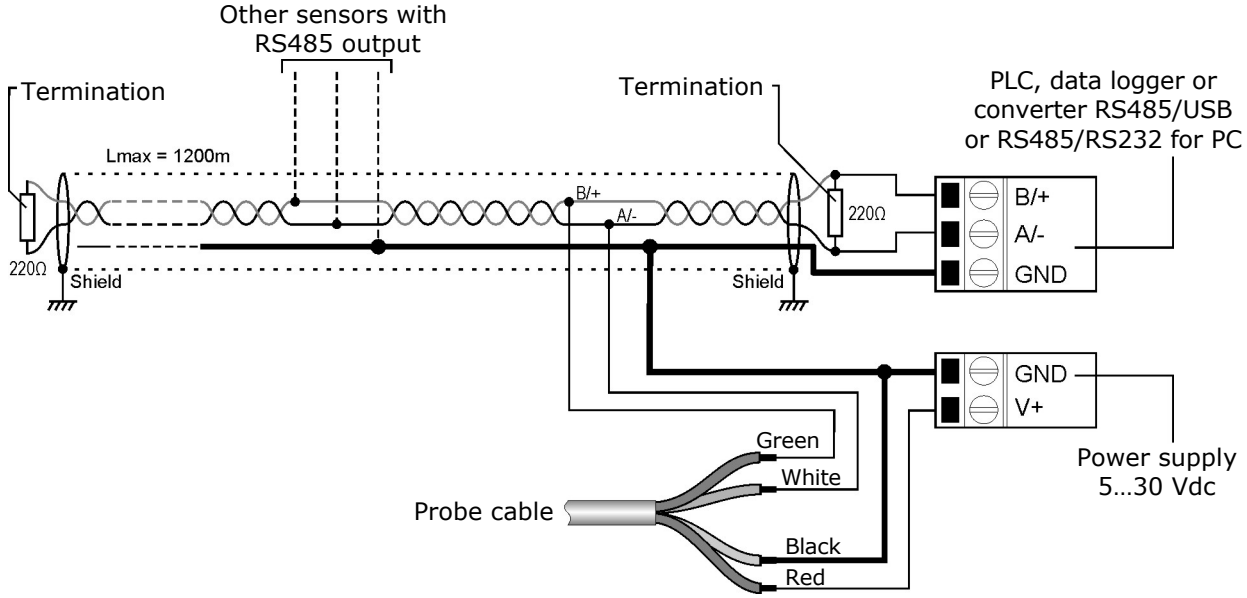

Fig. 3: RS485 connection

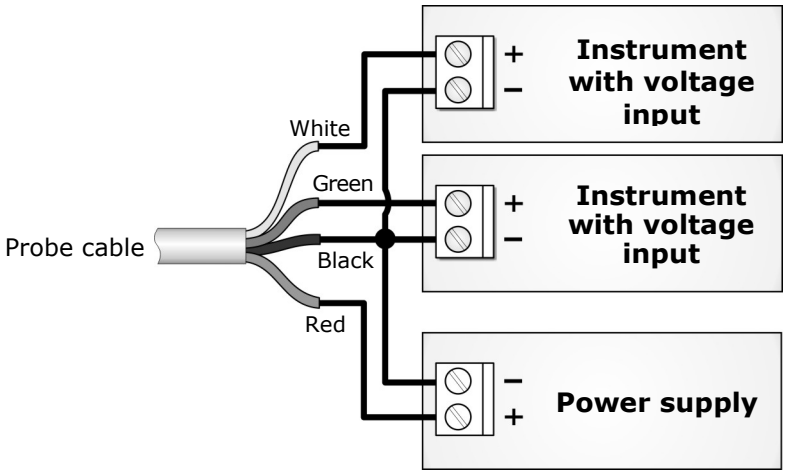

Fig. 4: analog outputs connection

Connect the cable shield to the negative of power supply.

SETTING OF RS485 COMMUNICATION PARAMETERS

Before connecting the probe to the RS485 network you must assign an address and set the communication parameters, if different from the factory preset.

The parameter setting is performed by connecting the probe to the PC by using a RS485/USB or RS485/RS232 converter. The probe must be powered separately. If RS485/USB converter is used it is necessary to install the appropriate USB drivers in the PC.

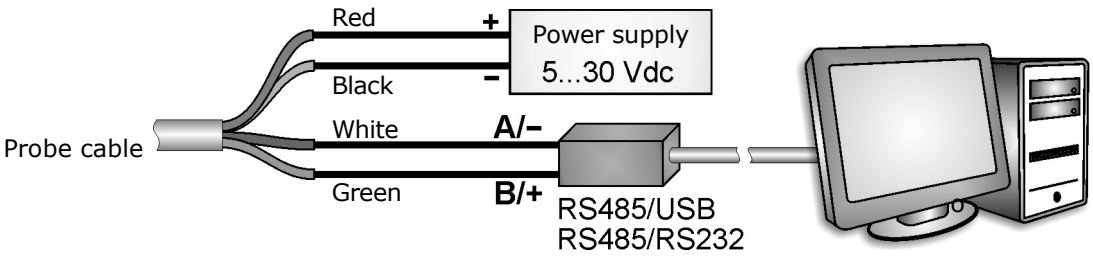

Fig. 5: connection to PC

NOTES ON THE INSTALLATION OF UNSIGNED USB DRIVERS: before installing unsigned USB drivers into operating systems starting from Windows 7, it is necessary to restart the PC disabling the driver signature request. If the operating system is 64-bit, even after installation, it is necessary to disable the request of the driver signature every time the PC is restarted.

Procedure for setting the parameters

1. Start a serial communication program, HyperTerminal for example. Set the communication parameters the same as those set in the instrument. By default, the parameters are:

   Baud Rate = 19200
   Data Bits = 8
   Parity = Even
   Stop Bits = 1

   In the program, set the number of the COM port to which you connect the probe.

2. Type three times the character **|** (124 decimal code ASCII character). The probe replies with **@**.

3. Within 10 seconds from the probe reply, send the command **@** (64 decimal code ASCII character followed by the Enter key). The probe replies with **&**.

   Note: if the probe does not receive the **@** command within 10 seconds, the Modbus mode is activated again.

4. Send the command **CAL USER ON**.

   Note: the CAL USER ON command is disabled after an inactivity of 5 minutes.

5. Send the following serial commands to set the RS485 MODBUS parameters:

Command	Reply	Description
CMAnnn	&|	Set address RS485 to nnn Ranging from 1 to 247. Preset on 1
CMBn	&|	Set RS485 Baud Rate: n=**0** ⇒ 9600, n=**1** ⇒ 19200 Preset on 1 ⇒ 19200
CMPn	&|	Set RS485 transmission mode (data bits, parity, stop bits): n=**0** ⇒ 8N1, n=**1** ⇒ 8N2, n=**2** ⇒ 8E1 n=**3** ⇒ 8E2, n=**4** ⇒ 8O1, n=**5** ⇒ 8O2 Preset on 2 ⇒ 8E1
CMWn	&|	Set receiving mode after RS485 transmission: n=**0** ⇒ Violate protocol and go in Rx mode right after Tx n=**1** ⇒ Respect protocol and wait 3.5 characters after Tx Preset on 1 ⇒ Respect the protocol

6. It is possible to check the settings of the parameters by sending the following command:

Command	Reply	Description
RMB	*b p w a*	Baud Rate: *b*=**0** ⇒ 9600, *b*=**1** ⇒ 19200 RS485 transmission mode: *p*=**0** ⇒ 8N1, *p*=**1** ⇒ 8N2, *p*=**2** ⇒ 8E1, *p*=**3** ⇒ 8E2, *p*=**4** ⇒ 8O1, *p*=**5** ⇒ 8O2 Read reception mode after RS485 transmission: *w*=**0** ⇒ violate protocol and go in Rx mode right after Tx *w*=**1** ⇒ respect protocol and wait 3.5 characters after Tx *a*= RS485 address

Note: the command CAL USER ON is not required for reading the settings.

MODBUS MODE

The probe enters RS485 MODBUS-RTU mode immediately after power on.

Reading the measurements

In MODBUS mode, it is possible to read the measured values by using the function code 04h (Read Input Registers). The following table shows the MODBUS Input Registers available:

MODBUS Input Registers

Register Number	Register Address	Datum	Format
1	0	Status register	16-bit integer
2	1	Volumetric water content in % VWC [x10]	16-bit integer
3	2	Apparent dielectric permittivity [x1000]	16-bit integer
4	3	Soil temperature in °C [x10]	16-bit integer
5	4	Soil temperature in °F [x10]	16-bit integer

STATUS REGISTER

The 16-bit status register gives the following information:

Bit	Description
0	If equal to 1, an error occurred
1	If equal to 1, data memory overflow
2	If equal to 1, data memory error
3	If equal to 1, program memory error
4…5	Always 0
6	If equal to 1, VWC measurement error
7	If equal to 1, temperature measurement error
8	If equal to 1, power cycle
9…14	Always 0
15	If equal to 1, probe not ready (invalid measures)

SDI-12 PROTOCOL

The probes with SDI-12 output are compliant with the version 1.3 of the protocol.

The communication parameters of the protocol are:

baud rate: 1200, data bits: 7, parity: Even, stop bits: 1

The communication with the probe is performed by sending a command in the following form:

<Address><Command>!

with <Address> = address of the probe the command is sent to
<Command> = type of operation requested to the probe

The probe reply is as follows:

<Address><Data><CR><LF>

with <Address> = address of the probe which replies
<Data> = information sent by the probe
<CR> = ASCII character *Carriage Return*
<LF> = ASCII character *Line Feed*

The probe comes with a factory address preset to 0. The address can be modified by using the proper SDI-12 command reported in the following table.

The following table reports the SDI-12 commands available. For consistency with the documentation of the SDI-12 standard, the probe address is indicated in the table with the letter **a**.

SDI-12 Commands

Command	Probe reply	Description
a!	a<CR><LF>	Verifies the presence of the probe.
aI!	allccccccccmmmmmmvvvssssssss<CR><LF> with: a = address of the probe (1 character) ll = SDI-12 compliant version (2 characters) cccccccc = manufacturer (8 characters) mmmmmm = probe model (6 characters) vvv = firmware version (3 characters) ssssssss = serial number (8 characters) ⇒ Example of response: 013DeltaOhmHD3910A0013201518 with: 0 = probe address 13 = SDI-12 version 1.3 compliant DeltaOhm = manufacturer's name HD3910 = probe model A00 = firmware version 13201518 = serial number	Requests for information from the probe.
aAb! Where: b = new address	b<CR><LF> Note: if the b character is not an acceptable address, the probe responds with a instead of b.	Modification of the probe address.
?!	a<CR><LF>	Request of the address of the probe. If more than one probe is connected to the bus, a conflict occurs.

Command	Probe reply	Description
Type M (start measurement) and type C (start concurrent measurement) commands		
VWC and temperature		
aM! **aC!**	atttn<CR><LF> with: ttt = number of seconds necessary for the instrument to make the measure available (3 characters) n = number of detected variables (1 character for aM!, 2 characters for aC!) Note: ttt = 000 means that datum is immediately available.	Request to execute the measurement.
aD0!	a+n+w…w+t…t<CR><LF> with: n = content of the status register w…w = volumetric water content (m^3/m^3) t…t = soil temperature in °C ⇒ Example of response: 0+0+0.325+17.6 probe address = 0 content of the status register = 0 volumetric water content = 0.325 (m^3/m^3) = 32.5% soil temperature = 17.6 °C	Reads the measurement.
Permittivity		
aM1! **aC1!**	atttn<CR><LF> with: ttt = number of seconds necessary for the instrument to make the measure available (3 characters) n = number of detected variables (1 character for aM1!, 2 characters for aC1!) Note: ttt = 000 means that datum is immediately available.	Request to execute the measurement.
aD0!	a+n+p…p<CR><LF> with: n = content of the status register p…p = apparent dielectric permittivity ⇒ Example of response: 0+0+0.029 probe address = 0 content of the status register = 0 apparent dielectric permittivity = 0.029	Reads the measurement.
Signal level and temperature		
aM2! **aC2!**	atttn<CR><LF> with: ttt = number of seconds necessary for the instrument to make the measure available (3 characters) n = number of detected variables (1 character for aM2!, 2 characters for aC2!) Note: ttt = 000 means that datum is immediately available.	Request to execute the measurement.
aD0!	a+n+v…v+t…t<CR><LF> with: n = content of the status register v…v = signal internal level in V t…t = soil temperature in °C ⇒ Example of response: 0+0+0.095302+17.6 probe address = 0 content of the status register = 0 signal internal level = 0.095302 V soil temperature = 17.6 °C	Reads the measurement.

In addition to the above-mentioned commands, the probe also implements the corresponding

commands with CRC, that require to add a 3-character CRC code at the end of the reply before <CR><LF>. The format of these commands is obtained from the previous by adding the letter C: aMC!, aMC1!, aMC2!, aCC!, aCC1!, aCC2!. The probe does not implement the type R (Continuous Measurements) commands.

MAINTENANCE

The probe does not require any special maintenance. We recommend a periodic cleaning with water and normal detergent of the electrodes in order to avoid the accumulation of substances that may alter the measures.

ORDERING CODES

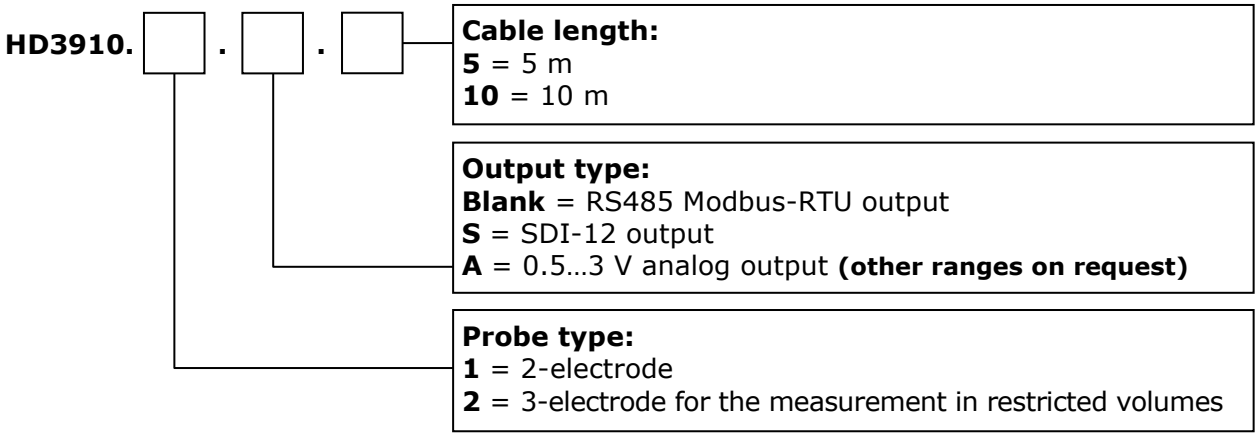

WARRANTY

The manufacturer is required to respond to the "factory warranty" only in those cases provided by Legislative Decree 6 September 2005 - n. 206. Each instrument is sold after rigorous inspections; if any manufacturing defect is found, it is necessary to contact the distributor where the instrument was purchased from. During the warranty period (24 months from the date of invoice) any manufacturing defects found will be repaired free of charge. Misuse, wear, neglect, lack or inefficient maintenance as well as theft and damage during transport are excluded. Warranty does not apply if changes, tampering or unauthorized repairs are made on the product. Solutions, probes, electrodes and microphones are not guaranteed as the improper use, even for a few minutes, may cause irreparable damages.
The manufacturer repairs the products that show defects of construction in accordance with the terms and conditions of warranty included in the manual of the product. For any dispute, the competent court is the Court of Padua. The Italian law and the "Convention on Contracts for the International Sales of Goods" apply.

TECHNICAL INFORMATION

The quality level of our instruments is the result of the continuous product development. This may lead to differences between the information reported in the manual and the instrument you have purchased.
We reserves the right to change technical specifications and dimensions to fit the product requirements without prior notice.

DISPOSAL INFORMATION

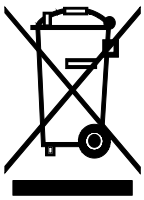

Electrical and electronic equipment marked with specific symbol in compliance with 2012/19/EU Directive must be disposed of separately from household waste. European users can hand them over to the dealer or to the manufacturer when purchasing a new electrical and electronic equipment, or to a WEEE collection point designated by local authorities. Illegal disposal is punished by law.

Disposing of electrical and electronic equipment separately from normal waste helps to preserve natural resources and allows materials to be recycled in an environmentally friendly way without risks to human health.

CE RoHS



Absolutely maintenance-free and extremely fast measurement of precipitation type (Rain, snow, sleet, freezing rain, hail) and intensity, thanks to radar measurement technology. The smart radar rain sensor & present weather detector!

- **Parameters measured**
  Rain/precipitation quantity, rain/precipitation type (Rain, snow, sleet, freezing rain, hail)

- **Measurement technology**
  24GHz Doppler radar

- **Product highlights**
  Very fast response time, maintenance-free measurement, present weather detection

- **Interfaces**
  RS-485 semi-duplex two-wire, SDI-12, pulse interface / UMB protocol, Modbus

- **Article number**
  8367.U03, 8367.U04, 8367.U05

The Lufft WS100 is our rain sensor with radar technology and adjustable heating. Using a 24-GHz Doppler radar, it measures the speed of all forms of condensed water. These include rain, freezing rain, hail, snow and sleet.
The low-energy sensor detects precipitation from the first drop. Its possible uses are nearly unlimited. Whether in hydrology and water management, agricultural and environmental science, building automation, meteorology or airport and traffic control: the rain gauge measures rain almost anywhere in the world.

General	
Dimensions	Ø150 mm (5.9 in), height: 190 mm (7.48 in)
Suitable mast diameter	60 - 76 mm
Weight	~0.6 kg

Electrical parameters	
Power supply	10...28 VDC
Power consumption without heating	1 VA / 0.4 VA (low power mode)
Heating power	9 VA

Operating parameters	
Operat. temp. range	-40...60 °C
Operat. humidity range	0...100 %
Protection class	IP66
Survival wind speed	75 m/s

Data transfer	
Interfaces/ protocols	RS-485 semi-duplex two-wire, SDI-12, pulse interface / UMB protocol, Modbus
(Pluggable) cable length	10 m
Transmission frequency	24 GHz

Precipitation	
Measurement surface	9 cm^2
Precipitation types	Rain, snow, sleet, freezing rain, hail, drizzle; No precipitation (SYNOP 4677)
Principle	Doppler radar
Accuracy	±0.16mm or ±10% of the measured value for liquid precipitation*
*)	Under laboratory conditions by means of Lufft test system: Reference drop simulator with 2.8 mm drop diameter and adjustable intensity between 10 and 200 mm/h.
Resolution liquid preciptiation	0.01 / 0 .1 / 0.2 / 0.5 / 1.0 mm (pulse interface)

Measurement ranges	
Droplet size	0.3...5.0 mm
Drop Size Distribution	11 drop size classes with bandwidth of 0.5 mm
Precipitation intensity	0.01...200 mm/h / 0...7.874 inch/h
Particle velocity	0.9...15.5 m/s
Solid precipitation	5.1...~30 mm

PCE Italia s.r.l.
Via Pesciatina 878 / B-Interno 6
55012 Gragnano (LUCCA)
Italia
Telefono: +39 0583 975 114
Fax: +39 0583 974 824
info@pce-italia.it
www.pce-instruments.com/italiano

Sensore di velocità del vento PCE-WS A

Sensore di velocità del vento di alta resistenza meccanica e grande flessibilità

Il sensore di velocità del vento compete nella qualità con i migliori sensori sul mercato, in plastica o metallo. Il segnale di uscita della tensione è proporzionale alla velocità del vento. I cuscinetti incorporati sono in acciaio inox di alta qualità. Costruito in plastica tecnica di alta qualità

Applicazioni

Il dispositivo è utile per qualsiasi applicazione in cui è necessario conoscere la velocità del vento: applicazioni sia industriali che domestiche, gru, pannelli solari, turbine eoliche, stazioni meteorologiche ... Può essere collegato ai nostri display, indicatori, PLC e altri sistemi, per visualizzare la velocità del vento e/o essere in grado di attivare allarmi preimpostati.

- Design industriale per ambienti ostili
- Uscita analogica 4-20 mA
- Cuscinetti in acciaio inox
- Basso consumo elettrico

Specifiche tecniche

Alimentazione	12 ... 30V DC
Intensità massima	<20 mA
Tipo di uscita	Analogica (4-20 mA 2 fili)
Impedenza di carico collegabile	$R_L < \frac{Vcc - 8V}{0,02\ A}\ \Omega$
Range di misura	3 ... 180 km/h
Velocità di avvio	8 km/h
Velocità massima	200 km/h
Precisione	1km/h (3-15 km/h) 3% (15-180 km/h)
Materiale	PA +FV
Cuscinetti	Acciaio inox X65Cr13
Peso (con cavo da 20m)	1425 g
Peso (senza cavo)	135 g
Temperatura di stoccaggio	-35 ... +80 ºC
Temperatura operativa senza ghiaccio	-20 .. +70 ºC
EMC	EN 61000-6-2:2001 EN 55022:2001, Classe B
Grado di protezione	IP65 (UNE 20324:1993)

Contenuto della spedizione

1 x Sensore di velocità del vento PCE-WS A con uscita analogica 4-20 mA,
1 x Cavo da 20 m a 2 fili,
Istruzioni per l'uso (Disponibili in Inglese, Italiano in traduzione)

Italiano



Istruzioni per l’uso

Serie PCE-WS | Anemometro

Le istruzioni per l’uso in varie lingue (italiano, inglese, francese, spagnolo, tedesco, portoghese, olandese, turco…) possono essere trovate usando la funzione cerca su: www.pce-instruments.com

Ultima modifica: 26. febbraio 2024
v1.0

PCE Instruments

Indice

1 Informazioni di sicurezza 1

2 Specifiche tecniche 2

3 Contenuto della spedizione 3

4 Dimensioni 4

5 PCE-WS V / PCE-WS A 5

5.1 Messa in scala del segnale di uscita 5

5.2 Connessione 6

6 PCE-WS CR 7

6.1 Connessione 8

7 PCE-WS RS485 8

7.1 Connessione 8

7.2 Protocollo di interfaccia 8

7.3 Lettura | Metodo 1 9

7.4 Lettura | Metodo 2 9

7.5 Scrittura 9

8 PCE-WS P 10

9 Garanzia 12

10 Smaltimento del dispositivo e delle batterie 12

1 Informazioni di sicurezza

Leggere attentamente e integralmente il presente manuale di istruzioni. L'uso del dispositivo è consentito solo a personale qualificato. I danni provocati dalla mancata osservanza delle presenti istruzioni ci esimono da qualsiasi responsabilità.

- Questo dispositivo deve essere utilizzato come descritto nel manuale d'istruzioni. In caso contrario si possono creare situazioni di pericolo.
- Utilizzare il dispositivo solo quando le condizioni ambientali (temperatura, umidità ...) si trovano entro i limiti indicati nelle specifiche. Non esporre il dispositivo a temperature elevate, alla luce diretta del sole e all'umidità.
- La struttura del dispositivo può essere aperta solo da personale di PCE Instruments.
- Non utilizzare il dispositivo con le mani bagnate.
- Non effettuare modifiche tecniche al dispositivo.
- Il dispositivo può essere pulito solo con un panno. Non usare prodotti detergenti abrasivi o solventi.
- Utilizzare con il dispositivo solo accessori forniti da PCE Instruments o equivalenti.
- Prima dell'uso, controllare che non vi siano danni visibili alla struttura. In tal caso, non utilizzare lo strumento.
- Non utilizzare il dispositivo in ambienti potenzialmente a rischio di esplosione.
- Non devono essere superati valori limite delle grandezze indicate nelle specifiche.
- Evitare il contatto con la polvere ed evitare forti campi elettromagnetici, spruzzi d'acqua, condensa e gas.
- La mancata osservanza delle presenti indicazioni possono provocare guasti al dispositivo e lesioni all'operatore.

Il presente manuale di istruzione è stato pubblicato da PCE Instruments senza nessun tipo di garanzia.
Per consultare le condizioni generali di garanzia, rimandiamo al capitolo dedicato ai nostri Termini e condizioni.
Per ulteriori informazioni, la preghiamo di rivolgersi a PCE Instruments.

2 Specifiche tecniche

PCE-WS A	
Uscita	4 … 20 mA
Impedenza massima collegabile	$R_L < \frac{V_{CC} - 8V}{0.02\ A}\ \Omega$
Protezione	IP 65
Alimentazione	12 … 30 V DC
Impedenza massima	<20 mA
Tipo di connessione	3 x 0,75 mm²
PCE-WS V	
Uscita	0 … 10 V
Impedenza di uscita	4k6 Ω
Protezione	IP 65
Alimentazione	15 … 24 V DC
Intensità massima	<2,5 W
Tipo di connessione	3 x 0,75 mm²
PCE-WS P	
Uscita	Frequenza (impulsi)
Tipo di contatto	Reed
Protezione	IP 65
Alimentazione	3 … 24 V DC
Intensità massima	24 mA
Tipo di connessione	4 x 0,65 mm²
PCE-WS CR	
Uscita	Contatto relè (NA libero da tensione)
Tipo di contatto	8 A / 250 V AC
Protezione	IP 54
Alimentazione	12 … 24 V DC
Consumo massimo	<1 W
Tipo di connessione	4 x 0,75 mm²
PCE-WS RS485	
Uscita	RS-485
Intensità massima di uscita	100 mA
Protezione	IP 65
Alimentazione	9 … 30 V DC
Intensità massima	100 mA
Tipo di connessione	4 x 0,65 mm²

Altre specifiche	
Range di misura	3 … 180 km/h
velocità di partenza	8 km/h
Velocità massima	200 km/h
Precisione	1 km/h Range di 3 … 15 km/h 3 % Range di 15 … 180 km/h
Materiale	PA + FV
Cuscinetti	Acciaio inox X65Cr13
Temperatura operativa	-20 … +70 ºC (senza ghiaccio)
Temperatura di stoccaggio	-35 … +80 ºC
Dimensioni	125 x 139 mm
Lunghezza del cavo di collegamento	20 m (salvo versione RS485: 25 m)

3 Contenuto della spedizione

1 x Anemometro PCE-WS con 20 m di cavo (versione RS-485: 25 m)
1 x Manuale di istruzioni

4 Dimensioni

Vista da sopra:

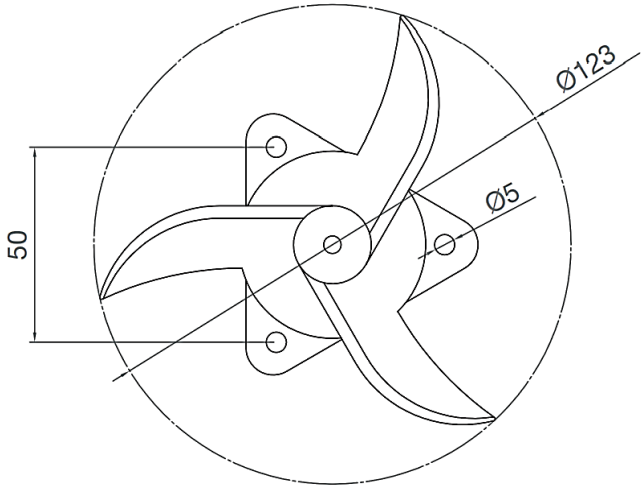

Vista da sotto:

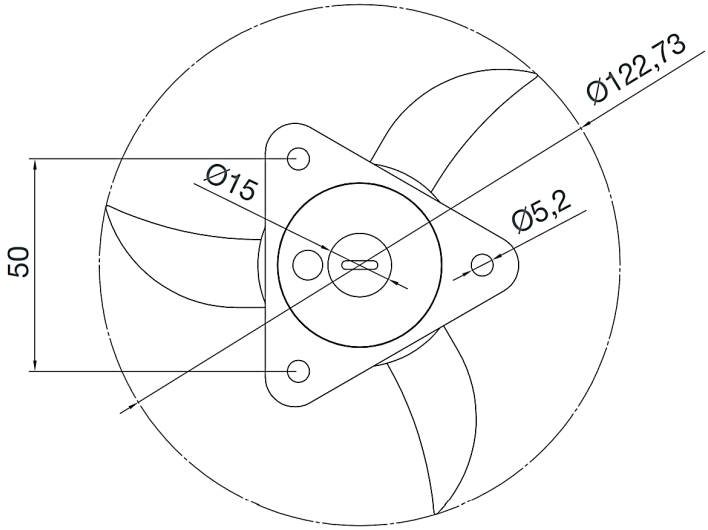

Vista laterale:

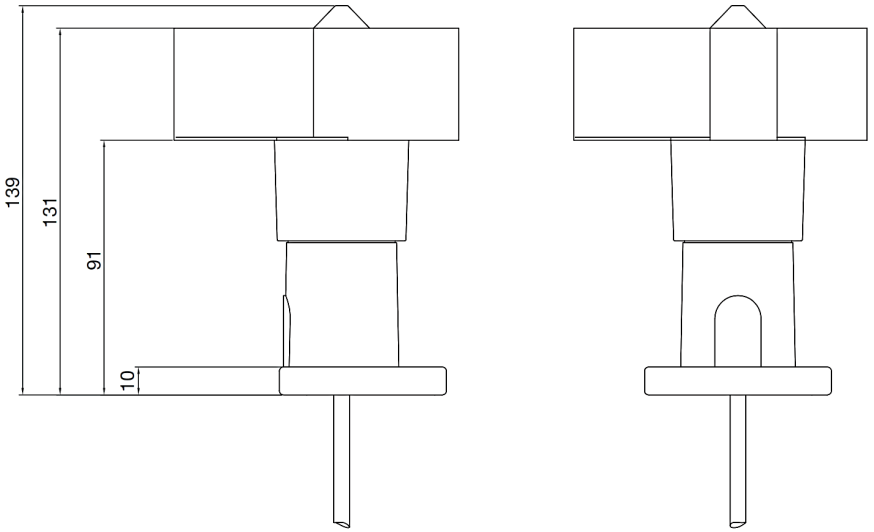

5 PCE-WS V / PCE-WS A

5.1 Messa in scala del segnale di uscita

Il segnale di uscita è un segnale analogico 0 ... 10 V o 4 ... 20 mA a seconda della versione. Le uscite sono lineari e sono strutturate nel modo seguente:

0 ... 10 V = 0 ... 180 km/h

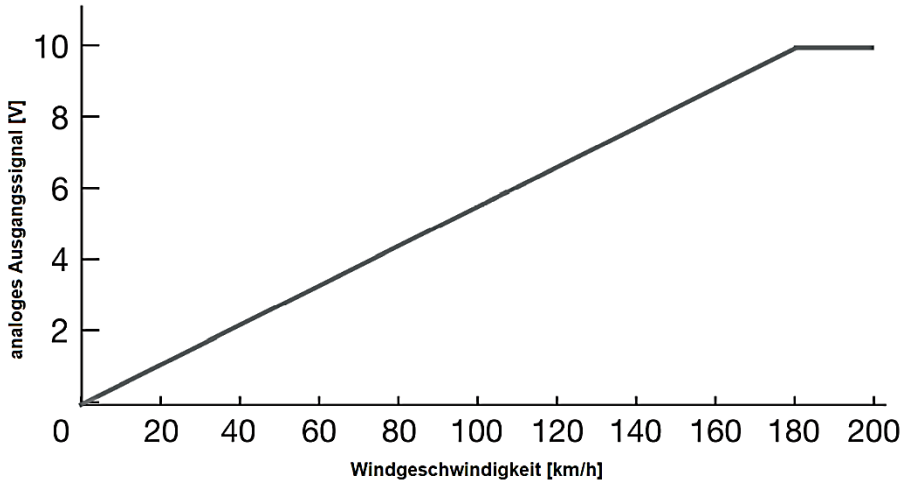

4 ... 20 mA = 0 ... 180 km/h

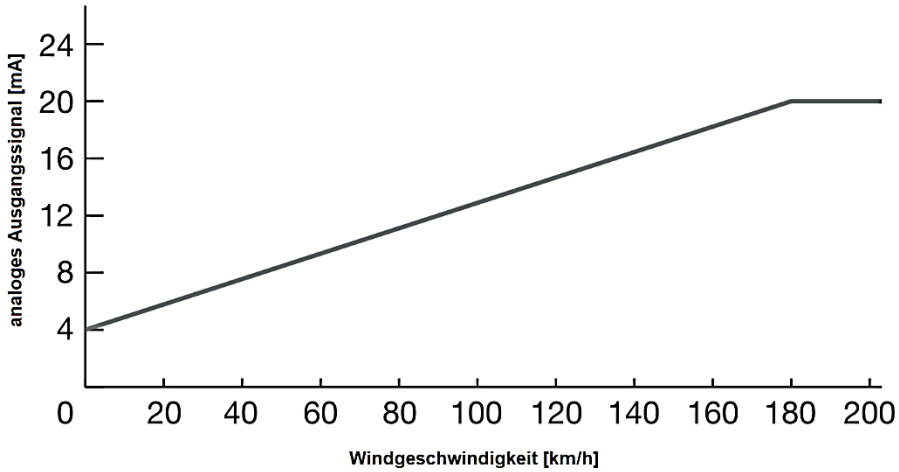

5.2 Connessione

Il sensore per il segnale analogico 4 ... 20 mA viene collegato a un'unità di valutazione come segue:

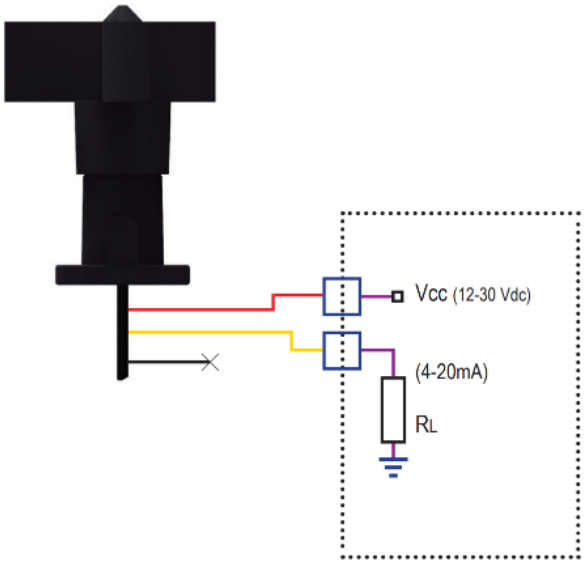

Il sensore per il segnale analogico 0 ... 10 V viene collegato a una unità di valutazione nel modo che segue:

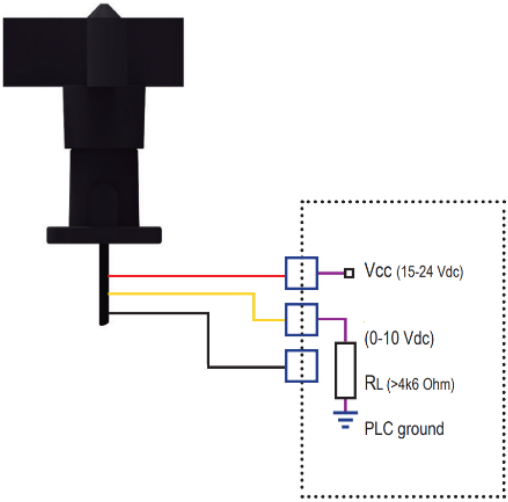

6 PCE-WS CR

Il PCE-WS CR ha un'uscita a relè regolabile tramite un selettore rotativo posto in basso, dietro il coperchio filettato. Il relè si attiva 1 secondo dopo il superamento della soglia del valore limite impostato. Se la velocità del vento è inferiore di 1 km/h alla soglia limite, il relè viene di nuovo disinserito. Il tempo minimo di uscita è di 5 secondi. È possibile impostare i seguenti valori limite:

Configurazione	Velocità
0	20 km/h
1	25 km/h
2	30 km/h
3	35 km/h
4	40 km/h
5	45 km/h
6	50 km/h
7	55 km/h
8	60 km/h
9	65 km/h
A	70 km/h
B	75 km/h
C	80 km/h
D	85 km/h
E	90 km/h
F	95 km/h

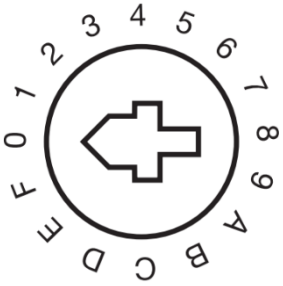

6.1 Connessione

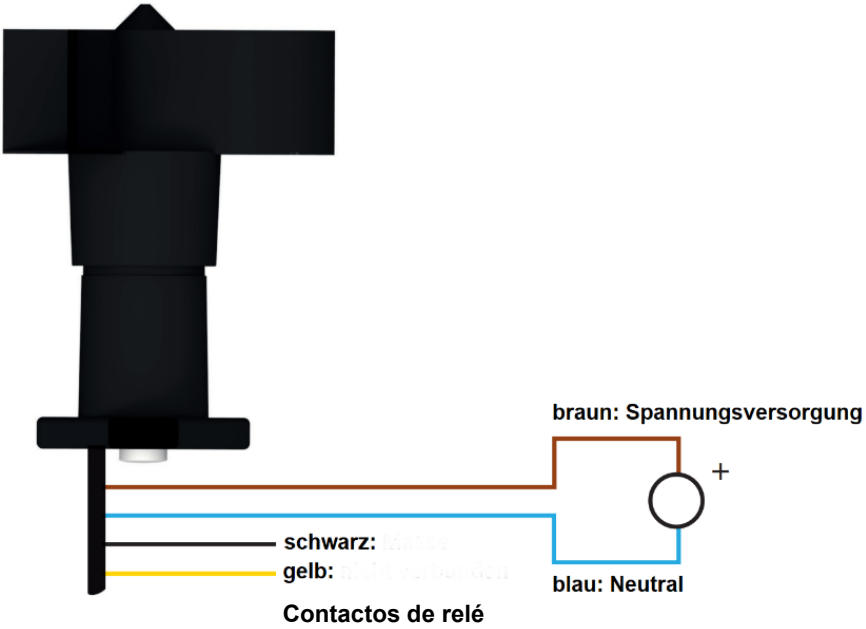

7 PCE-WS RS485

Il PCE-WS RS485 trasmette i valori di misura direttamente tramite un segnale RS-485. La resistenza di uscita è già inclusa nel sensore ed è di 120 Ω.

7.1 Connessione

Connessione	Colore
Alimentazione	Blu
Massa	Bianco
RS485 A	Arancione
RS485 B	Giallo

7.2 Protocollo di interfaccia

Tipo di protocollo: Modbus RTU
Formato file: 1 bit di start, 8 bit di dati e 1 bit di stop
Velocità di trasmissione: 19200 baud
Parità: Pari

Addr	04	00	00	00	01	CRCH	CRCL

La velocità del vento in km/h è memorizzata in 2 registri: @30001 e @40001. L'utente può leggere questo valore utilizzando una qualsiasi delle 2 funzioni disponibili (Read Input Register e Read Holding Register).
L'indirizzo di default del PCE-WS RS485 è 244 <=> 0xF4
Questo valore è memorizzato in Holding Register @40002 e può essere modificato dall'utente. L'utente può impostare qualsiasi indirizzo nel range 1 (0x01) a 255 (0xFF).

7.3 Lettura | Metodo 1

Richiesta di lettura della velocità del vento da master mediante *Read Input Register* (funzione 0x04)

03	04	00	00	00	01	30	28

Risposta di slave (PCE-WS RS485 Modbus RTU)

03	04	02	SH	SL	CRCH	CRCL

SHSL: Il valore della velocità del vento in km/h.

Esempio di risposta di slave per 100 km/h (0x0064)

03	04	02	00	64	C1	1B

7.4 Lettura | Metodo 2

Richiesta di lettura della velocità del vento da maestro con *Read Holding Register* (funzione 0x03)

03	03	00	00	00	01	85	E8

Risposta di slave (PCE-WS RS485 Modbus RTU)

03	03	02	SH	SL	CRCH	CRCL

SHSL: Il valore della velocità del vento in km/h.

Esempio di risposta di slave per 100 km/h (0x0064)

03	03	02	00	64	C0	6F

7.5 Scrittura

Richiesta di scrittura di Address mediante *Write Single Register* (funzione 0x06):

03	06	00	01	00	NEW_ADDR	CRCH	CRCL

Nota: L'indirizzo del dispositivo (Addr) si memorizza in Holding Register @40002

Risposta di slave (PCE-WS RS485 Modbus RTU)

03	06	00	01	00	NEW_ADDR	CRCH	CRCL

NEW_ADDR Il nuovo indirizzo che avrà il dispositivo. Sono i valori tra 1 (0x01) to 255 (0xFF).

Esempio para NEW_ADDR 0x02

Richiesta di scrittura

03	06	00	01	00	02	58	29

Risposta di slave

03	06	00	01	00	02	58	29

NOTA: L'indirizzo dello slave passa al nuovo valore immediatamente dopo il messaggio di risposta.

8 PCE-WS P

Il modello PCE-WS P ha un contatto reed che emette la velocità del vento secondo quanto segue funzione:

Velocità del vento (km/h) = 0,8*Hz +3

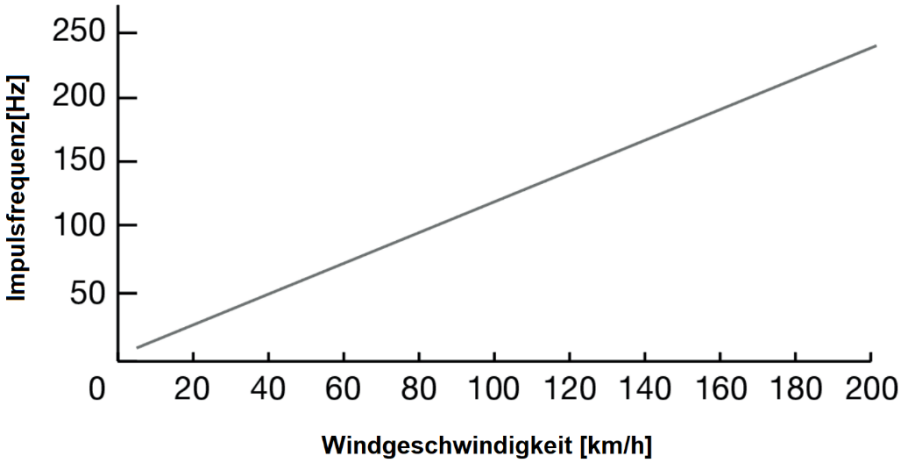

Connessione

Il cablaggio interno del sensore per il vento è il seguente.

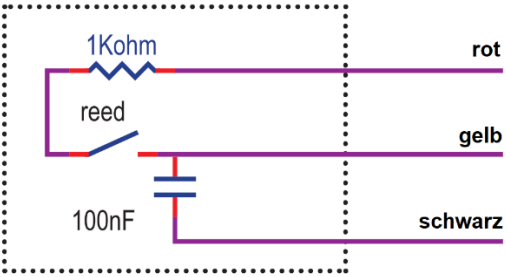

Esistono diverse opzioni di connessione per mettere in funzione il sensore.
Collegamento a due fili per il collegamento diretto a uno schermo

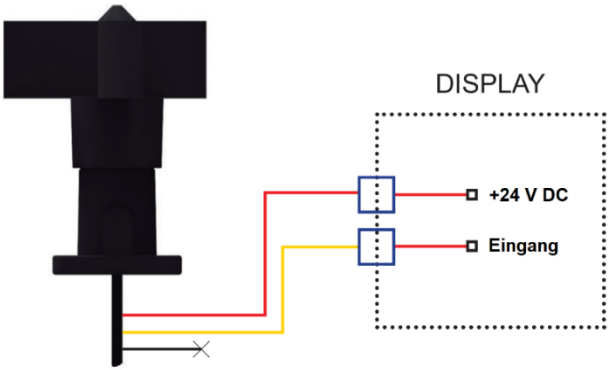

Connessione a tre fili per collegamento diretto a un PLC, per esempio

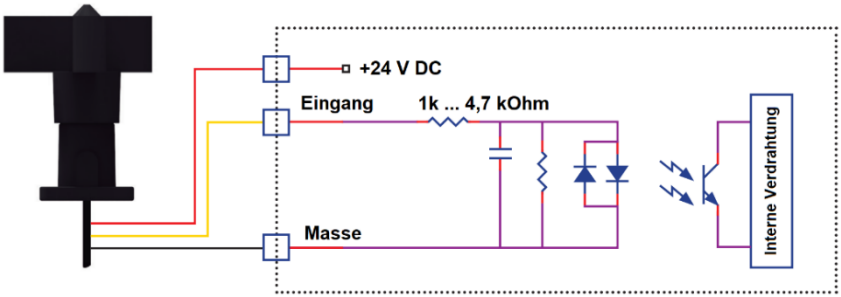

9 Garanzia

Le nostre condizioni di garanzia le può trovare a questo indirizzo:
https://www.pce-instruments.com/italiano/stampa.

10 Smaltimento del dispositivo e delle batterie

Per lo smaltimento delle batterie nell'UE si applica la direttiva 2006/66/CE del Parlamento europeo. A causa delle sostanze inquinanti contenute, le batterie non devono essere smaltite come rifiuti domestici. Devono essere conferite ai centri di raccolta previsti a tale scopo.
Al fine di rispettare la direttiva 2012/19/UE, ritiriamo i nostri dispositivi. Li riutilizziamo o li consegniamo a un'azienda di riciclaggio che li smaltisce in conformità alla legge.
Per i Paesi al di fuori dell'UE, le batterie e i dispositivi devono essere smaltiti in conformità alle normative locali sui rifiuti.
Per qualsiasi domanda, contattare PCE Instruments.

RAEE-Reg.-Nr.DE69278128





ATTENZIONE: "Questo strumento non dispone di protezione ATEX, per cui non deve essere usato in ambienti potenzialmente a rischio di esplosione (polvere, gas infiammabili)."

Le specifiche possono essere soggette a modifiche senza preavviso.

Contatti PCE Instruments

Germania
PCE Deutschland GmbH
Im Langel 4
D-59872 Meschede
Deutschland
Tel.: +49 (0) 2903 976 99 0
Fax: +49 (0) 2903 976 99 29
info@pce-instruments.com
www.pce-instruments.com/deutsch

Francia
PCE Instruments France EURL
23, rue de Strasbourg
67250 Soultz-Sous-Forets
France
Téléphone: +33 (0) 972 3537 17
Numéro de fax: +33 (0) 972 3537 18
info@pce-france.fr
www.pce-instruments.com/french

Spagna
PCE Ibérica S.L.
Calle Mayor, 53
02500 Tobarra (Albacete)
España
Tel. : +34 967 543 548
Fax: +34 967 543 542
info@pce-iberica.es
www.pce-instruments.com/espanol

Regno Unito
PCE Instruments UK Ltd
Unit 11 Southpoint Business Park
Ensign Way, Southampton
Hampshire
United Kingdom, SO31 4RF
Tel: +44 (0) 2380 98703 0
Fax: +44 (0) 2380 98703 9
info@pce-instruments.co.uk
www.pce-instruments.com/english

Italia
PCE Italia s.r.l.
Via Pesciatina 878 / B-Interno 6
55012
Capannori (LU)
Italia
Telefono: +39 0583 975 114
Fax: +39 0583 974 824
info@pce-italia.it
www.pce-instruments.com/italiano

Turchia
PCE Teknik Cihazları Ltd.Şti.
Halkalı Merkez Mah.
Pehlivan Sok. No.6/C
34303 Küçükçekmece - İstanbul
Türkiye
Tel: 0212 471 11 47
Faks: 0212 705 53 93
info@pce-cihazlari.com.tr
www.pce-instruments.com/turkish

Paesi Bassi
PCE Brookhuis B.V.
Institutenweg 15
7521 PH Enschede
Nederland
Telefoon: +31 (0)53 737 01 92
info@pcebenelux.nl
www.pce-instruments.com/dutch

Stati Uniti
PCE Americas Inc.
1201 Jupiter Park Drive, Suite 8
Jupiter / Palm Beach
33458 FL
USA
Tel: +1 (561) 320-9162
Fax: +1 (561) 320-9176
info@pce-americas.com

Danimarca
PCE Instruments Denmark ApS
Brik Centepark 40
7400 Herning
Denmark

SR05 SERIES

Spectrally flat Class C (Second class) pyranometers with various outputs

SR05 series is the most affordable range of pyranometers meeting ISO 9060 requirements. They are ideal for general solar radiation measurements in (agro-)meteorological networks and PV monitoring systems. SR05's are easy to mount and install. Various outputs are available, both digital and analogue, for ease of integration.



Figure 1 *SR05 with ball levelling and tube mount.*



Figure 2 *Easy levelling of SR05 on its tube mount with ball levelling. SR05 series offers various industry standard digital and analogue outputs.*

Introduction

SR05 series is an economical range of ISO 9060 class C pyranometers for measurement of solar radiation received by a plane surface, in W/m^2, from a 180 ° field of view angle. Different configurations are available, depending on its mounting and the output needed. The combination of easy installation and its cost makes SR05 ideal for installation in (agro-) meteorology networks and PV power plant monitoring.

Benefits

- industry standard digital and analogue outputs: easy implementation and servicing
- easy mounting and levelling
- pricing: Class C pyranometers finally affordable for large networks

Suggested use

- general solar radiation measurements
- (agro-)meteorological networks
- PV power plant monitoring

Copyright by Hukseflux. Version 2301. We reserve the right to change specifications without prior notice

SR05 series design

SR05 pyranometers employ a thermopile sensor with black coated surface, one dome and an anodised aluminium body with visible bubble level. Optionally the sensor has a unique ball levelling mechanism and tube mount, for easy installation. SR05 has a variety of industry standard outputs, both digital and analogue: SR05-D1A3 offers Modbus over RS-485 and 0-1 V output, SR05-D2A2 offers Modbus over TTL and 4-20 mA current loop output. Version SR05-A1 offers a conventional analogue millivolt output.



Figure 3 *'Exploded view' of SR05. The optional ball levelling and tube mount allow for easy installation. The cable (standard 3 m) has an M12-A connector.*

Standards

Applicable instrument classification standards are ISO 9060 and WMO-No. 8.



SR05 series specifications

Measurand	hemispherical solar radiation
ISO classification	
ISO 9060:2018	spectrally flat Class C pyranometer
ISO 9060:1990	second class pyranometer
WMO performance level	moderate quality pyranometer
Calibration uncertainty	< 2.4 % (k = 2)
Calibration traceability	to WRR
Spectral range	285 to 3000 x 10^{-9} m
Rated operating temperature range	-40 to +80 °C
Standard cable length	3 m
Rated operating voltage range	
-versions -D1A3 and -D2A2	5 to 30 VDC
-version -A1	passive sensor
Levelling	ball levelling, optional with / without tube mount

Output

Version SR05-D1A3	
Communication protocol	Modbus
Hardware interface	2-wire (half duplex) RS 485
Digital output	-irradiance in W/m^2 -instrument body temperature in °C
Analogue output	0-1 V
Version SR05-D2A2	
Communication protocol	Modbus
Hardware interface	TTL
Digital output	same as SR05 D1A3
Analogue output	4-20 mA current loop
Version SR05-A1	
Analogue output	millivolt
Sensitivity (nominal)	10 x 10^{-6} V/(W/m^2)

Versions

SR05 series offers various versions with industry standard outputs, both digital and analogue, each with several options:

- SR05-D1A3 digital Class C pyranometer, with Modbus over RS-485 and 0-1 V output
- SR05-D2A2 digital Class C pyranometer, with Modbus over TTL and 4-20 mA output
- SR05-A1 analogue Class C pyranometer with millivolt output

Options

- cable lengths: 10, 20 m
- extension cable with connector pair: 10, 20 m
- with ball levelling
- with ball levelling and tube mount (for tube diameters 25 – 40 mm)
- OEM versions

Copyright by Hukseflux. Version 2301. We reserve the right to change specifications without prior notice

Table 1 *Ordering codes for SR05*

VERSIONS OF SR05 (part numbers), without cable	
SR05-D1A3	digital Class C pyranometer, with Modbus over RS-485 and 0-1 V output
SR05-D2A2	digital Class C pyranometer, with Modbus over TTL and 4-20 mA output
SR05-A1	analogue Class C pyranometer, with millivolt output
CABLE FOR SR05, with female M12-A connector at sensor end, non-stripped on other end	
'-03' after SR05 part number	standard cable length: 3 m
'-10' after SR05 part number	cable length: 10 m
'-20' after SR05 part number	cable length: 20 m
CABLE EXTENSION FOR SR05, with male and female M12-A connectors	
C06E-10	cable length: 10 m
C06E-20	cable length: 20 m
LEVELLING OPTIONS FOR SR05	
BL01	ball levelling, for levelling of SR05
TMBL01	tube mount with ball levelling, for mounting SR05 on a tube



SR05



SR05 with BL01



SR05 with TMBL01

See also

- PMF01 pyranometer mounting fixture, compatible with SR05 ball levelling
- view our complete range of pyranometers

About Hukseflux

Hukseflux is the leading expert in measurement of energy transfer. We design and manufacture sensors and measuring systems that support the energy transition. We are market leaders in solar radiation- and heat flux measurement. Customers are served through the main office in the Netherlands, and locally owned representations in the USA, Brazil, India, China, Southeast Asia and Japan.

Are you interested in this product?
E-mail us at: info@hukseflux.com

Copyright by Hukseflux. Version 2301. We reserve the right to change specifications without prior notice

Hukseflux
Thermal Sensors

USER MANUAL

SR05-D1A3 & **SR05-D2A2**

Digital second class pyranometers with various outputs



Copyright by Hukseflux | manual v2303 | www.hukseflux.com | info@hukseflux.com

Warning statements



Putting more than 30 Volt across the sensor wiring of the main power supply can lead to permanent damage to the sensor.



For proper instrument grounding: use SR05 with its original factory-made SR05 cable. See chapter on grounding and use of the shield.



Using the same Modbus address for more than one device will lead to irregular behaviour of the entire network.



Your data request may need an offset of +1 for each SR05 register number, depending on processing by the network master. Consult the manual of the device acting as the local master.

Modbus® is a registered trademark of Schneider Electric, licensed to the Modbus Organization, Inc.

Hukseflux
Thermal Sensors

Contents

Warning statements		**2**
Contents		**3**
List of symbols		**5**
Introduction		**6**
1	**Ordering and checking at delivery**	**10**
1.1	Ordering SR05	10
1.2	Included items	11
1.3	Quick instrument check	12
2	**Instrument principle and theory**	**13**
3	**Specifications of SR05 series**	**16**
3.1	Specifications of SR05-D1A3 and SR05-D2A2	16
3.2	Dimensions of SR05	20
4	**Standards and recommended practices for use**	**21**
4.1	Classification standard	21
4.2	General use for solar radiation measurement	21
4.3	General use for sunshine duration measurement	21
4.4	Specific use for outdoor PV system performance testing	22
4.5	Specific use in meteorology and climatology	23
5	**Installation of SR05**	**24**
5.1	Site selection and installation	24
5.2	Mounting and levelling SR05	25
5.3	Installing SR05	25
5.4	Installing SR05 with its ball levelling and tube mount	26
5.5	Electrical connection of SR05 series: wiring diagram	30
5.6	Grounding and use of the shield	31
5.7	Using SR05-D1A3's analogue 0 to 1 V output	32
5.8	Using SR05-D2A2's analogue 4 to 20 mA output	33
5.9	Using SR05-D1A3's and SR05-D2A2's digital output	35
5.10	Connecting SR05-D1A3 to an RS-485 network	35
5.11	Connecting SR05-D2A2 to a TTL device	37
5.12	Connecting SR05 to a PC	38
6	**Communication with SR05**	**40**
6.1	PC communication: Sensor Manager software	40
6.2	Network communication: function codes, registers, coils	45
6.3	Network communication: getting started	52
6.4	Network communication: example master request to SR05	53
7	**Making a dependable measurement**	**55**
7.1	The concept of dependability	55
7.2	Reliability of the measurement	56
7.3	Speed of repair and maintenance	57
7.4	Uncertainty evaluation	57
8	**Maintenance and trouble shooting**	**60**
8.1	Recommended maintenance and quality assurance	60
8.2	Trouble shooting	61
8.3	Calibration and checks in the field	62
8.4	Data quality assurance	63
9	**Appendices**	**64**
9.1	Appendix on cable extension / replacement	64
9.2	Appendix on tools for SR05	66

9.3 Appendix on spare parts for SR05 66
9.4 Appendix on standards for classification and calibration 67
9.5 Appendix on calibration hierarchy 68
9.6 Appendix on meteorological radiation quantities 69
9.7 Appendix on ISO and WMO classification tables 70
9.8 Appendix on definition of pyranometer specifications 71
9.9 Appendix on terminology / glossary 72
9.10 Appendix on floating point format conversion 73
9.11 Appendix on function codes, register and coil overview 74
9.12 Appendix on finding the sensor model name in the register 78
9.13 EU declaration of conformity 79

Hukseflux
Thermal Sensors

List of symbols

Quantities	**Symbol**	**Unit**
Voltage output	U	V
Sensitivity	S	V/(W/m^2)
Solar irradiance	E	W/m^2
Output of 0-1 V	U	V
Transmitted range of 0-1 V	r	W/m^2
Output of 4-20 mA current loop	I	A
Resistance	R	Ω
Transmitted range of 4-20 mA	r	W/m^2

(see also appendix 9.6 on meteorological quantities)

Subscripts

Not applicable

Introduction

SR05 series is the most affordable range of pyranometers meeting ISO 9060 second class requirements. They are ideal for general solar radiation measurements in (agro-) meteorological networks and PV monitoring systems. SR05's are easy to mount and install. Various outputs are available, both digital and analogue, for ease of integration.

SR05 pyranometer measures solar radiation received by a plane surface, in W/m^2, from a 180 ° field of view angle. Different configurations are available, depending on its mounting and the output needed.

SR05 employs a thermopile sensor with black coated surface, one dome and an anodised aluminium body with visible bubble level. SR05 has a variety of industry standard outputs, both digital and analogue:

- Version SR05-D1A3: digital sensor with Modbus over RS-485 and analogue 0-1 V output
- Version SR05-D2A2: digital sensor with Modbus over TTL and analogue 4–20 mA output
- Version SR05-A1: analogue sensor with analogue millivolt output

and

- Version SR05-D1A3-PV: digital with Modbus over RS-485, alternative for PV reference cell

This user manual covers use of two digital sensors in the SR05 series range: SR05-D1A3 and SR05-D2A2. Specifications of these versions differ from those of the digital SR05-D1A3-PV version and of the analogue version of model SR05: SR05-A1. For SR05-D1A3-PV or SR05-A1 use, consult the separate SR05-D1A3-PV or SR05-A1 user manual.

Benefits of the digital SR05 series:

- Industry standard digital outputs: easy implementation and servicing
- Easy mounting and levelling
- Pricing: second class pyranometers finally affordable for large networks



Figure 0.1 *SR05 digital second class pyranometer seen from above*

Optionally the sensor has a unique ball levelling mechanism with or without tube mount, for easy installation.



Figure 0.2 *On the left SR05 digital second class pyranometer with bubble level and M12-A cable connector in its standard configuration (3 metre cable standard included); on the right SR05 with optional ball levelling, for easy mounting and levelling on (non-)horizontal surfaces (included mounting bolts not displayed)*



Figure 0.3 *SR05 digital second class pyranometer with optional ball levelling and tube mount for easy mounting and levelling on a tube (tube not included)*

For communication between a PC and SR05-D1A3 and/or SR05-D2A2, the Hukseflux Sensor Manager software is downloadable. It allows the user to plot and export data, and change the SR05 Modbus address and its communication settings.

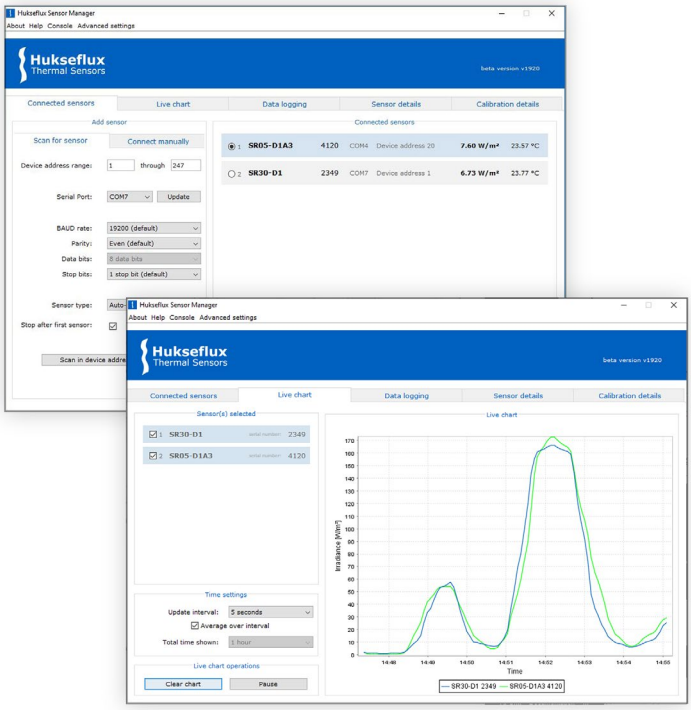

Figure 0.4 *User interface of the Sensor Manager*

SR05-D1A3 is suited for use in SCADA (Supervisory Control And Data Acquisition) systems, supporting Modbus RTU (Remote Terminal Unit) protocol over RS-485. In these networks the sensor operates as a slave. Using SR05-D1A3 in a network is easy. Once it has the correct Modbus address and communication settings and is connected to a power supply, the instrument can be used in RS-485 networks. A typical network will request the irradiance (registers 2 + 3) and temperature data (register 6) every 1 second, and eventually store the averages every 60 seconds. How to issue a request, process the register content and convert it to useful data is described in the paragraphs about network communication. The user should have sound knowledge of the Modbus communication protocol when installing sensors in a network. When using the analogue 0 to 1 V output provided by SR05-D1A3, the instrument can be connected directly to commonly used datalogging systems capable of handling a 0 to 1 V signal.

Version SR05-D1A3-PV, also with digital Modbus over RS-485 and 0-1 V output, is available as a perfect alternative for PV reference cells. Please see SR05-D1A3-PV's separate brochure and user manual.

When using SR05-D2A2's digital output, it can be connected to TTL devices via Modbus over TTL, or when using SR05-D2A2's analogue 4 to 20 mA output, to commonly used datalogging systems capable of handling a 4 to 20 mA current loop signal.

All SR05 versions should be used in accordance with the recommended practices of ISO, WMO and ASTM.

Suggested use for SR05:

- general solar radiation measurements
- (agro-)meteorological networks
- PV power plant monitoring

The recommended calibration interval of pyranometers is 2 years. The registers containing the applied sensitivity and the calibration history of the digital versions of SR05 are accessible for users with a password. This allows the user to choose his own local calibration service. The same register access may also be used for remotely controlled re-calibration of pyranometers in the field. Ask Hukseflux for information on this feature and on ISO and ASTM standardised procedures for field calibration.

The ASTM E2848 "Standard Test Method for Reporting Photovoltaic Non-Concentrator System Performance" (issued end 2011) confirms that a pyranometer is the preferred instrument for PV system performance monitoring. SR05 pyranometer complies with the requirements of this standard. For more information, see our pyranometer selection guide.

WMO has approved the "pyranometric method" to calculate sunshine duration from pyranometer measurements in WMO-No. 8, Guide to Meteorological Instruments and Methods of Observation. This implies that SR05 may be used, in combination with appropriate software, to estimate sunshine duration. This is much more cost-effective than using a dedicated sunshine duration sensor. Ask for our application note.

1 Ordering and checking at delivery

1.1 Ordering SR05

There are two standard configurations for the digital model SR05, each with several options:

- SR05-D1A3 (formerly known as SR05-DA1):
  with Modbus over RS-485 and 0-1 V output. standard cable length: 3 metres
- SR05-D2A2 (formerly known as SR05-DA2):
  with Modbus over TTL and 4-20 mA current loop output. standard cable length: 3 metres

Common options are:

- longer cable (10, 20 metres). Specify total cable length
- extension cable with connector pair (10, 20 metres). Specify total cable length
- ball levelling
- tube mount with ball levelling (for tube diameters 25 to 40 mm)

Ball levelling and tube mount are suited for retrofitting.

Table 1.1.1 *Ordering codes for the digital versions of model SR05*

VERSIONS OF SR05 (part numbers), without cable	
SR05-D1A3	digital second class pyranometer, with Modbus over RS-485 and 0-1 V output
SR05-D2A2	digital second class pyranometer, with Modbus over TTL and 4-20 mA output
CABLE FOR SR05, with female M12-A connector at sensor end, non-stripped on other end	
'-03' after SR05 part number	standard cable length: 3 m
'-10' after SR05 part number	cable length: 10 m
'-20' after SR05 part number	cable length: 20 m
LEVELLING OPTIONS FOR SR05	
BL01	ball levelling, for levelling of SR05
TMBL01	tube mount with ball levelling, for mounting SR05 on a tube
CABLE EXTENSION FOR SR05, with male and female M12-A connectors	
C06E-10	cable length: 10 m
C06E-20	cable length: 20 m

An extension cable (with connector pair) can be used in combination with a regular cable (with one connector at sensor end) to make alternative SR05 cable lengths possible.

Example: Cable length needed: 15 m. In this case, it is easiest to buy SR05 with a 20 m cable and to cut it to desired length.

Example: Cable length needed: 30 m. In this case, it is easiest to buy SR05 with 10 m cable and a cable extension of 20 m.

1.2 Included items

Arriving at the customer, the delivery should include:

- pyranometer SR05
- cable of the length as ordered
- product certificate matching the instrument serial number

Please store the certificate in a safe place.
The Hukseflux Sensor Manager can be downloaded via www.hukseflux.com/downloads

When ordering mounting options BL01 or TMBL01 with SR05, the delivery should also include:

- BL01:
  - ball levelling
  - 4 mm hex key
  - 1 x shim
  - 2 x M5x20 bolts
  - 2 x M5 nuts

- TMBL01:
  - ball levelling
  - 4 mm hex key
  - 1 x shim
  - 2 x M5x20 bolts
  - 2 x M5 nuts
  - tube mount
  - 2 x M5x30 bolts
  - 2 x M5x40 bolts



Figure 1.2.1 *From left to right: SR05, SR05 with mounting option BL01, and SR05 with tube mounting option TMBL01*
(nuts and bolts, tools and certificates are not shown, tube itself is not included)

1.3 Quick instrument check

A quick test of the instrument can be done by connecting it to a PC and installing the Sensor Manager software. See the chapters on installation and PC communication for directions.

1. At power–up the signal may have a temporary output level different from zero; an offset. Let this offset settle down.
2. Check if the sensor reacts to light: expose the sensor to a strong light source, for instance a 100 W light bulb at 0.1 m distance. The signal should read > 100 W/m^2 now. Darken the sensor either by putting something over it or switching off the light. The instrument irradiance output should go down and within one minute approach 0 W/m^2.
3. Inspect the bubble level.
4. Inspect the instrument for any damage.
5. Check the instrument serial number as indicated by the software against the label on the instrument and against the certificates provided with the instrument.

2 Instrument principle and theory

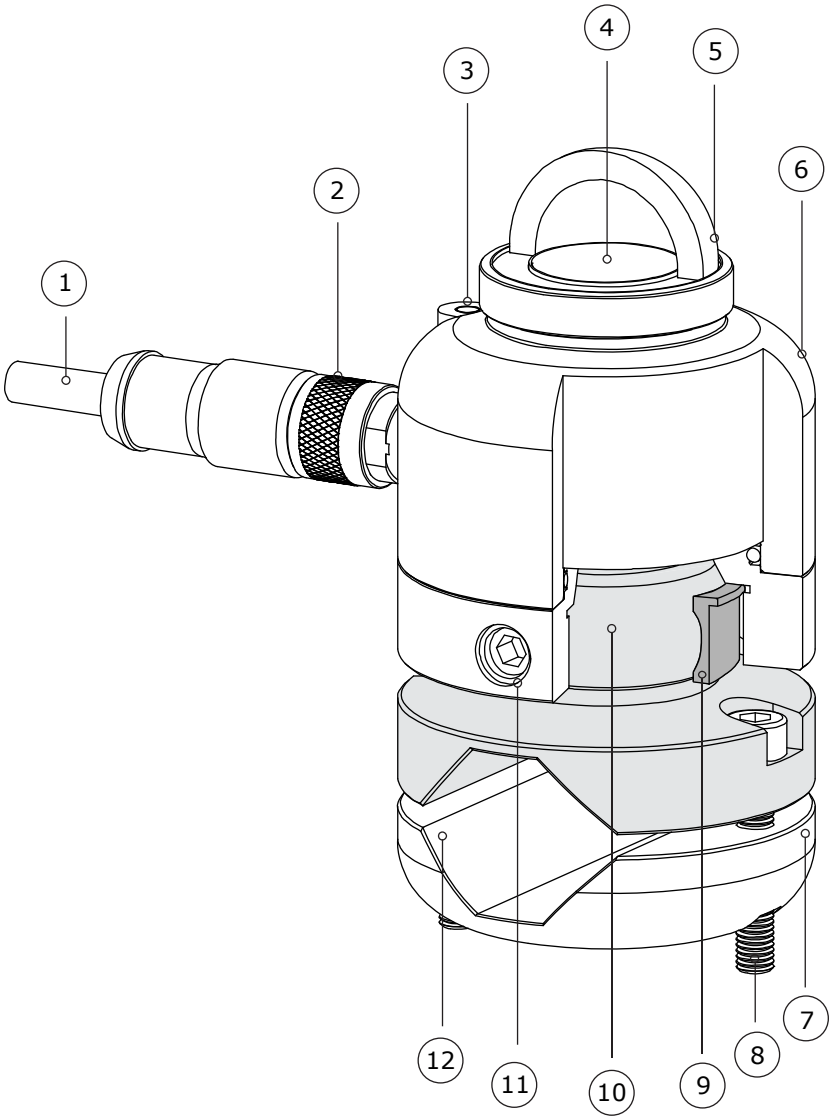

Figure 2.1 *Overview of SR05 (shaded areas in exploded view show ball levelling mount and shim). Numbers 7 to 12 are included when ordering option BL01 or TMBL01:*

(1) cable (standard length 3 metres, optional longer cable)
(2) connector
(3) bubble level
(4) thermal sensor with black coating
(5) glass dome
(6) sensor body
(7) tube mount (included with TMBL01)
(8) mounting screw (included with BL01 and TMBL01; requires 4 mm hex key)
(9) shim (included with BL01 and TMBL01; needed for ball levelling mount)
(10) ball levelling mount (included with BL01 and TMBL01l)
(11) countersunk set screw for levelling adjustment (included with BL01 and TMBL01; requires 4 mm hex key)
(12) opening for Ø 25 to Ø 40 mm tube when using ball levelling and tube mount

SR05's scientific name is pyranometer. A pyranometer measures the solar radiation received by a plane surface from a 180 ° field of view angle. This quantity, expressed in W/m^2, is called "hemispherical" solar radiation. The solar radiation spectrum extends roughly from 285 to 3000 x 10^{-9} m. By definition a pyranometer should cover that spectral range with a spectral selectivity that is as "flat" as possible.

In an irradiance measurement by definition the response to "beam" radiation varies with the cosine of the angle of incidence; i.e. it should have full response when the solar radiation hits the sensor perpendicularly (normal to the surface, sun at zenith, 0 ° angle of incidence), zero response when the sun is at the horizon (90 ° angle of incidence, 90 ° zenith angle), and 50 % of full response at 60 ° angle of incidence.
A pyranometer should have a so-called "directional response" (older documents mention "cosine response") that is as close as possible to the ideal cosine characteristic.

In order to attain the proper directional and spectral characteristics, a pyranometer's main components are:

- a thermal sensor with black coating. It has a flat spectrum covering the 200 to 50000 x 10^{-9} m range, and has a near-perfect directional response. The coating absorbs all solar radiation and, at the moment of absorption, converts it to heat. The heat flows through the sensor to the sensor body. The thermopile sensor generates a voltage output signal that is proportional to the solar irradiance.

- a glass dome. This dome limits the spectral range from 285 to 3000 x 10^{-9} m (cutting off the part above 3000 x 10^{-9} m), while preserving the 180 ° field of view angle. Another function of the dome is that it shields the thermopile sensor from the environment (convection, rain).

The digital versions of model SR05 have a high-end 24-bit A/D converter, which is used by SR05 to convert the analogue thermopile voltage to a digital signal.

Pyranometers can be manufactured to different specifications and with different levels of verification and characterisation during production. The ISO 9060 - 1990 standard, "Solar energy - specification and classification of instruments for measuring hemispherical solar and direct solar radiation", distinguishes between 3 classes; secondary standard (highest accuracy), first class (second highest accuracy) and second class (third highest accuracy).

From second class to first class and from first class to secondary standard, the achievable accuracy improves by a factor 2.

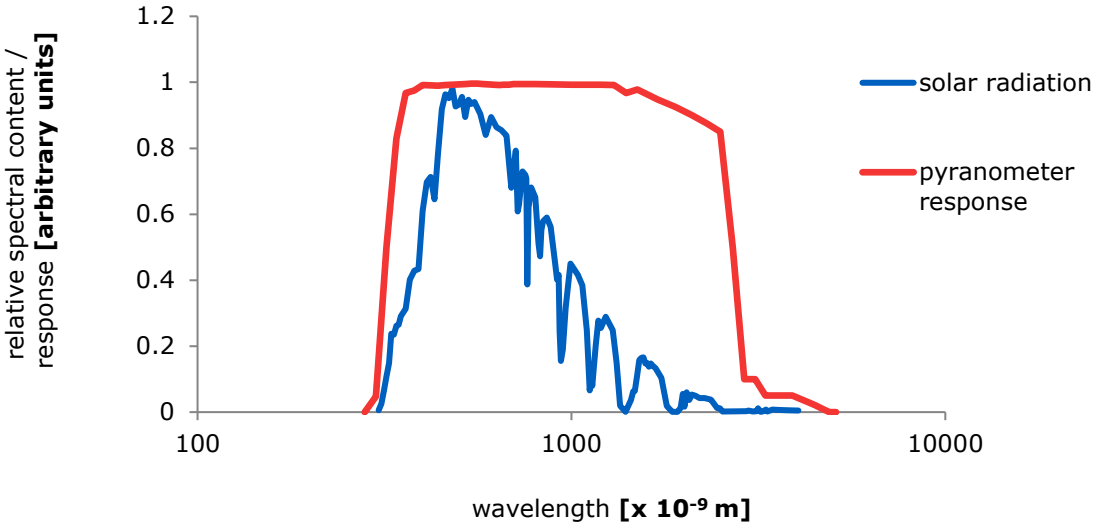

Figure 2.2 *Spectral response of the pyranometer compared to the solar spectrum. The pyranometer only cuts off a negligible part of the total solar spectrum.*

3 Specifications of SR05 series

3.1 Specifications of SR05-D1A3 and SR05-D2A2

SR05 measures the solar radiation received by a plane surface from a 180 ° field of view angle. This quantity, expressed in W/m^2, is called "hemispherical" solar radiation.

SR05-D1A3 offers irradiance in W/m^2 as a digital output and as a 0-1 V output. It must be used in combination with suitable power supply and a data acquisition system which uses the Modbus communication protocol over RS-485 or one that is capable of handling a 0-1 V signal.

SR05-D2A2 offers irradiance in W/m^2 as a digital output and as a 4-20 mA output. It must be used in combination with suitable power supply and a data acquisition system which uses the Modbus communication protocol over TTL or one that is capable of handling a 4-20 mA current loop signal.

This user manual covers use of two digital sensors in the SR05 series range: SR05-D1A3 and SR05-D2A2. Specifications of these versions differ from those of the digital SR05-D1A3-PV version and of the analogue version of model SR05: SR05-A1. For SR05-D1A3-PV or SR05-A1 use, consult the separate SR05-D1A3-PV or SR05-A1 user manual.

The instrument is classified according to ISO 9060 and should be used in accordance with the recommended practices of ISO, IEC, WMO and ASTM.

Table 3.1.1 *Specifications of SR05 series (continued on next pages)*

SR05 MEASUREMENT SPECIFICATIONS: LIST OF CLASSIFICATION CRITERIA OF ISO 9060*	
ISO classification (ISO 9060: 1990)	second class pyranometer
WMO performance level (WMO-No. 8, seventh edition 2008)	moderate quality pyranometer
Response time (95 %)	18 s
Zero offset a (response to 200 W/m^2 net thermal radiation)	< 15 W/m^2 unventilated
Zero offset b (response to 5 K/h change in ambient temperature)	< ± 4 W/m^2
Non-stability	< ± 1 % change per year
Non-linearity	< ± 1 % (100 to 1000 W/m^2)
Directional response	< ± 25 W/m^2
Spectral selectivity	< ± 5 % (0.35 to 1.5 x 10^{-6} m)
Temperature response	< ± 3 % (-10 to +40 °C)
Tilt response	< ± 2 % (0 to 90 ° at 1000 W/m^2)

*For the exact definition of pyranometer ISO 9060 specifications see the appendix.

Table 3.1.1 *Specifications of SR05 series (continued)*

SR05 SERIES ADDITIONAL SPECIFICATIONS	
Measurand	hemispherical solar radiation
Measurand in SI radiometry units	irradiance in W/m^2
Optional measurand	sunshine duration
Field of view angle	180 °
Output definition	running average over 4 last measurements, measurement interval 0.1 s, refreshed every 0.1 s
Recommended data request interval	1 s, storing 60 s averages
Measurement range	0 to 2000 W/m^2
Measurement function / optional programming for sunshine duration	programming according to WMO guide paragraph 8.2.2
Internal temperature sensor	MAX31725 Digital temperature sensor
Rated operating temperature range	-40 to +80 °C
Spectral range (20 % transmission points)	285 to 3000 x 10^{-9} m
Standard governing use of the instrument	ISO/TR 9901:1990 Solar energy -- Field pyranometers -- Recommended practice for use ASTM G183 - 05 Standard Practice for Field Use of Pyranometers, Pyrheliometers and UV Radiometers
Supply to housing isolation voltage	100 V
Standard cable length (see options)	3 m
Cable diameter	4.8 x 10^{-3} m
Chassis connector	M12-A straight male connector, male thread, 5-pole
Chassis connector type	M12-A
Cable connector	M12-A straight female connector, female thread, 5-pole
Cable connector type	M12-A
Connector protection class	IP67
Cable replacement	replacement and extension cables with connector(s) can be ordered separately from Hukseflux
Mounting (see options)	2 x M5 bolt at 46 mm centre-to-centre distance on north-south axis, requires 4 mm hex key
Levelling (see options)	bubble level is included
Levelling accuracy	< 0.6 ° bubble entirely in ring
Desiccant	silica gel, 1.0 g, in a HDPE bag, (25 x 45) mm
IP protection class	IP67
Gross weight	approx. 0.5 kg
Net weight	approx. 0.5 kg
CALIBRATION	
Calibration traceability	to WRR
Calibration hierarchy	from WRR through ISO 9846 and ISO 9847, applying a correction to reference conditions
Calibration method	indoor calibration according to ISO 9847, Type IIc
Calibration uncertainty	< 2.4 % (k = 2)
Recommended recalibration interval	2 years
Reference conditions	20 °C, normal incidence solar radiation, horizontal mounting, irradiance level 1000 W/m^2
Validity of calibration	based on experience the instrument sensitivity will not change during storage. During use under exposure to solar radiation the instrument "non-stability" specification is applicable.
Adjustment after re-calibration	via a PC, as *power user* with the Sensor Manager software. Request "power user" status at the factory for sensitivity adjustment and for writing the calibration history data.

Table 3.1.1 *Specifications of SR05 series (started on previous pages)*

HEATING	
Heater	no heating
MEASUREMENT ACCURACY AND RESOLUTION	
Uncertainty of the measurement	statements about the overall measurement uncertainty can only be made on an individual basis. see the chapter on uncertainty evaluation
WMO estimate on achievable accuracy for daily sums (see appendix for a definition of the measurement conditions)	10 %
WMO estimate on achievable accuracy for hourly sums (see appendix for a definition of the measurement conditions)	20 %
Irradiance resolution	0.2 W/m^2
Instrument body temperature resolution	3.9×10^{-3} °C
Instrument body temperature accuracy	± 0.5 °C
SR05-D1A3: DIGITAL	
Digital output	irradiance in W/m^2 instrument body temperature in °C
Rated operating voltage range	5 to 30 VDC
Recommended operating voltage	12 VDC
Power consumption	$< 75 \times 10^{-3}$ W at 12 VDC
Communication protocol	Modbus over 2-wire RS-485 half duplex
Transmission mode	Modbus RTU
System requirements for use with PC	Windows Vista and later, USB or RS-232 (COM) port and connector, RS-485 / USB converter or RS-485 / RS-232 converter
Software requirements for use with PC	Java Runtime Environment – software available free of charge at http://www.java.com
User interface on PC	Hukseflux Sensor Manager software downloadable: to download and for available software updates, please check http://www.hukseflux.com/page/downloads
SR05-D1A3: ANALOGUE 0 TO 1 V	
0 to 1 V output	irradiance in W/m^2
Transmitted range	0 to 1600 W/m^2
Output signal	0 to 1 V
Standard setting (see options)	0 V at 0 W/m^2 and 1 V at 1600 W/m^2
Rated operating voltage range	5 to 30 VDC
Recommended operating voltage	12 VDC
Power consumption	$< 75 \times 10^{-3}$ W at 12 VDC
SR05-D2A2: DIGITAL	
Digital output	irradiance in W/m^2 instrument body temperature in °C
Rated operating voltage range	5 to 30 VDC
Recommended operating voltage	12 VDC
Minimum operating voltage	10 VDC
Power consumption	$< 240 \times 10^{-3}$ W at 12 VDC
Maximum offset due to electronics	-7 W/m^2

Communication protocol	Modbus over TTL
Transmission mode	Modbus RTU
System requirements for use with PC	Windows Vista and later, USB or RS-232 (COM) port and connector, TTL / USB converter or TTL / RS-232 converter

Table 3.1.1 *Specifications of SR05 series (started on previous pages)*

Software requirements for use with PC	Java Runtime Environment – software available free of charge at http://www.java.com
User interface on PC	Hukseflux Sensor Manager software downloadable: to download and for available software updates, please check http://www.hukseflux.com/page/downloads
SR05-D2A2: ANALOGUE 4 TO 20 mA	
4 to 20 mA output	irradiance in W/m^2
Transmitted range	0 to 1600 W/m^2
Output signal	4 to 20 x 10^{-3} A
Standard setting (see options)	4 x 10^{-3} A at 0 W/m^2 and 20 x 10^{-3} A at 1600 W/m^2
Principle of 4 to 20 mA output	2-wire current loop
Rated operating voltage range	5 to 30 VDC
Recommended operating voltage	12 VDC
Minimum operating voltage	10 VDC
Power consumption	< 240 x 10^{-3} W at 12 VDC
Recommended shunt resistance	100 Ω
Maximum offset due to electronics	-7 W/m^2
OPTIONS	
Longer cable: 10,20 m Cable with M12-A female connector on sensor end, non-stripped on other end	option code = total cable length
Extension cable with connector pair: 10, 20 m. Cable with male and female M12-A connectors	option code = C06E-10 for 10 metres, C06E-20 for 20 metres
Ball levelling (BL01)	mountable on (non-)horizontal surfaces with angle compensation up to 10 °; retrofittable; one shim, two M5x20 mounting bolts and two M5 nuts included; requires 4 mm hex key for levelling and 4 mm hex key and 8 mm wrench for mounting
Tube mount with ball levelling (TMBL01)	mountable on tubes Ø 25 to Ø 40 mm with angle compensation up to 10 °; retrofittable; one shim, two M5x30 and two M5x40 mounting bolts included; requires 4 m hex key for levelling and mounting
Adapted transmitted range 0 to 1 V	can be adjusted at the factory upon request
Adapted transmitted range 4 to 20 mA	can be adjusted at the factory upon request

3.2 Dimensions of SR05

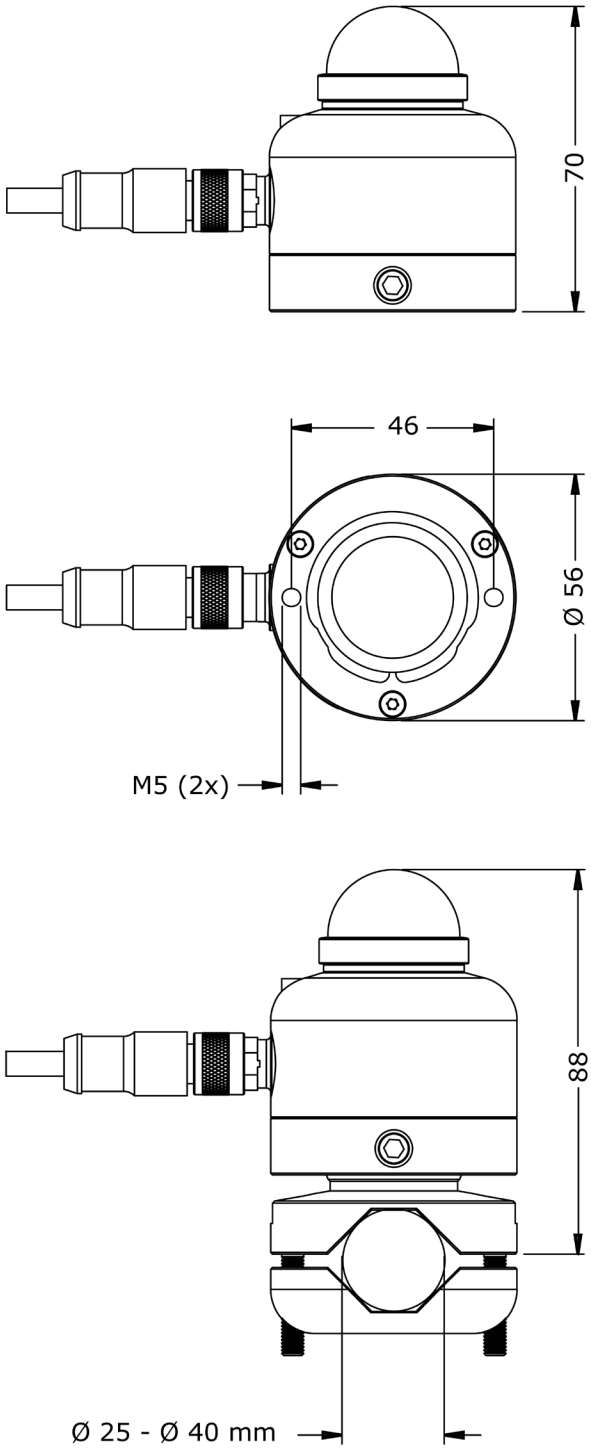

Figure 3.2.1 *Dimensions of SR05 in x 10^{-3} m. The bottom drawing shows the height of SR05 combined with its optional ball levelling mount and the tube diameter required for use with SR05's optional tube mount. M5 mounting bolts and the countersunk set screw require a 4 mm hex key for mounting and levelling.*

4 Standards and recommended practices for use

Pyranometers are classified according to the ISO 9060 standard and the WMO-No. 8 Guide. In any application the instrument should be used in accordance with the recommended practices of ISO, IEC, WMO and / or ASTM.

4.1 Classification standard

Table 4.1.1 *Standards for pyranometer classification. See the appendix for definitions of pyranometer specifications, and a table listing the specification limits.*

STANDARDS FOR INSTRUMENT CLASSIFICATION		
ISO STANDARD	EQUIVALENT ASTM STANDARD	WMO
ISO 9060:1990 Solar energy -- specification and classification of instruments for measuring hemispherical solar and direct solar radiation	Not available	WMO-No. 8; Guide to Meteorological Instruments and Methods of Observation, chapter 7, measurement of radiation, 7.3 measurement of global and diffuse solar radiation

4.2 General use for solar radiation measurement

Table 4.2.1 *Standards with recommendations for instrument use in solar radiation measurement*

STANDARDS FOR INSTRUMENT USE FOR HEMISPHERICAL SOLAR RADIATION		
ISO STANDARD	EQUIVALENT ASTM STANDARD	WMO
ISO/TR 9901:1990 Solar energy -- Field pyranometers -- Recommended practice for use	ASTM G183 - 05 Standard Practice for Field Use of Pyranometers, Pyrheliometers and UV Radiometers	WMO-No. 8; Guide to Meteorological Instruments and Methods of Observation, chapter 7, measurement of radiation, 7.3 measurement of global and diffuse solar radiation

4.3 General use for sunshine duration measurement

According to the World Meteorological Organization (WMO, 2003), sunshine duration during a given period is defined as the sum of that sub-period for which the direct solar irradiance exceeds 120 W/m^2.

WMO has approved the "pyranometric method" to estimate sunshine duration from pyranometer measurements (Chapter 8 of the WMO Guide to Instruments and Observation, 2008). This implies that a pyranometer may be used, in combination with appropriate software, to estimate sunshine duration. Ask for our application note.

Table 4.3.1 *Standards with recommendations for instrument use in sunshine duration measurement*

STANDARDS FOR INSTRUMENT USE FOR SUNSHINE DURATION
WMO
WMO-No. 8; Guide to Meteorological Instruments and Methods of Observation, chapter 8, measurement of sunshine duration, 8.2.2 Pyranometric Method

4.4 Specific use for outdoor PV system performance testing

Pyranometers are used for monitoring PV power plant efficiency, in order to measure incoming solar radiation independently from the PV system. Pyranometers can be placed in two positions:

- plane of array (POA), parallel to the PV panels, for measurement of the in-plane irradiance (also noted as G_i in IEC 61724-1)
- horizontally, for measurement of the global horizontal irradiance (E, also noted as GHI in IEC 61724-1)

SR05 series is applicable in outdoor PV system performance testing. See also Hukseflux model SR15-D1 and SR15-D2A2 digital first class pyranometers and SR05-D1A3-PV. The latter is an SR05 version offered as an alternative for monitoring with PV reference cells.

Table 4.4.1 *Standards with recommendations for instrument use in PV system performance testing*

STANDARDS ON PV SYSTEM PERFORMANCE TESTING	
IEC / ISO STANDARD	EQUIVALENT ASTM STANDARD
IEC 61724-1; Photovoltaic system performance monitoring – guidelines for measurement, data exchange and analysis COMMENT: Allows pyranometers or reference cells according to IEC 60904-2 and -6. Pyranometer reading required accuracy better than 5% of reading (Par 4.1) COMMENT: equals JISC 8906 (Japanese Industrial Standards Committee)	ASTM 2848-11; Standard Test Method for Reporting Photovoltaic Non-Concentrator System Performance COMMENT: confirms that a pyranometer is the preferred instrument for outdoor PV testing. Specifically recommends a "first class" pyranometer (paragraph A 1.2.1.)

4.5 Specific use in meteorology and climatology

The World Meteorological Organization (WMO) is a specialised agency of the United Nations. It is the UN system's authoritative voice on the state and behaviour of the earth's atmosphere and climate. WMO publishes WMO-No. 8; Guide to Meteorological Instruments and Methods of Observation, in which a table is included on "level of performance" of pyranometers. Nowadays WMO conforms itself to the ISO classification system.

5 Installation of SR05

5.1 Site selection and installation

Table 5.1.1 *Recommendations for installation of pyranometers*

Location	the situation that shadows are cast on the instruments is usually not desirable. The horizon should be as free from obstacles as possible. Ideally there should be no objects between the course of the sun and the instrument.
Mechanical mounting / thermal insulation	preferably use the ball levelling mount included with BL01 and TMBL01 to mount SR05 to a (non-) horizontal surface. A pyranometer is sensitive to thermal shocks. Do not mount the instrument on objects that become very hot (black coated metal plates).
Instrument mounting with 2 bolts	2 x M5 bolt at 46 mm centre-to-centre distance on north-south axis, connection through the sensor bottom in SR05's standard configuration. with BL01 ball levelling option: 2 x M5 bolt at 46 mm centre-to-centre distance, connection through ball levelling mount, M5x20 bolts and M5 nuts included. with TMBL01 ball levelling on tube mount option: 2 x M5 bolt at 46 mm centre-to-centre distance, connection through tube and ball levelling mount, M5x30 and M5x40 bolts included.
Performing a representative measurement	the pyranometer measures the solar radiation in the plane of the sensor. This may require installation in a tilted or inverted position. The black sensor surface (sensor bottom plate) should be mounted parallel to the plane of interest. In case a pyranometer is not mounted horizontally or in case the horizon is obstructed, the representativeness of the location becomes an important element of the measurement. See the chapter on uncertainty evaluation.
Levelling	in case of horizontal mounting use the bubble level and optionally the ball levelling mount. The bubble level is visible and can be inspected at all times.
Instrument orientation	by convention with the cable exit pointing to the nearest pole (so the cable exit should point north in the northern hemisphere, south in the southern hemisphere).
Installation height	in case of inverted installation, WMO recommends a distance of 1.5 m between soil surface and sensor (reducing the effect of shadows and in order to obtain good spatial averaging).

5.2 Mounting and levelling SR05

SR05 in its standard configuration is equipped with a visible bubble level and two mounting holes. For easy mounting and levelling on a (non-)horizontal surface, SR05's optional ball levelling, included with BL01 and TMBL01, is recommended. Ball levelling offers:

- easy levelling
- easy cable orientation
- easy instrument exchange
- easy mounting (mounting bolts and nuts included)

When installing SR05, ball levelling allows SR05 to rotate 360 ° and to tilt up to 10 °. This allows compensation for up to a ten degree angle when installing on a non-horizontal surface. A 4 mm hex key (un)locks the ball levelling mechanism. When using a tube or rod for installing SR05, the optional tube mount, included with TMBL01, is recommended. Combined with ball levelling it allows mounting to a 25 to 40 mm diameter tube with the same ease of levelling and instrument exchange.



Figure 5.2.1 *From left to right: SR05 in its standard configuration with 3 metre cable; with optional ball levelling for easy mounting and levelling on a (non-)horizontal surface; with optional ball levelling and tube mount for easy installation on a 25 to 40 mm diameter tube. Mounting bolts are included with the ball levelling and / or tube mount.*

5.3 Installing SR05

SR05 without ball levelling and tube mounting options can be mounted using two M5 bolts (not included). For the required screw lengths, 5 to 7 mm should be added to the thickness of the user's mounting platform. See the chapter on required tooling.

5.4 Installing SR05 with its ball levelling and tube mount

Two M5x20 bolts and two M5 nuts are included with SR05's BL01 (and TMBL01) ball levelling option. These screws are to be used to mount SR05 with its ball levelling to a (non-)horizontal surface when mounting SR05 with BL01.

Two M5x30 bolts and two M5x40 screws are included with SR05's TMBL01's tube mount with ball levelling option. These screws are to be used to clamp both ball levelling and tube mount to a 25 to 40 mm diameter tube. For tube diameters larger than or equal to 33 mm, use the M5x40 bolts instead of the M5x30 bolts for a secure fit.

The unique ball head mechanism of SR05's ball levelling mount is used to level SR05. When ordering ball levelling with SR05, it is delivered separately from SR05.

In case SR05 is not attached to its ball levelling mount yet, the user has to ensure a shim is placed properly in the centre of the bottom plate of SR05 before mounting and levelling. The shim allows smooth levelling and is shown top left in Figure 5.4.1. Follow steps 1 to 5 in Section 5.4.1 for placing the shim. Once a shim is in place, follow steps 6 to 9 in Section 5.4.2 to mount and level SR05 with its BL01 or TMBL01 ball levelling option. See Section 5.4.3 for removing the ball levelling mount and its shim.

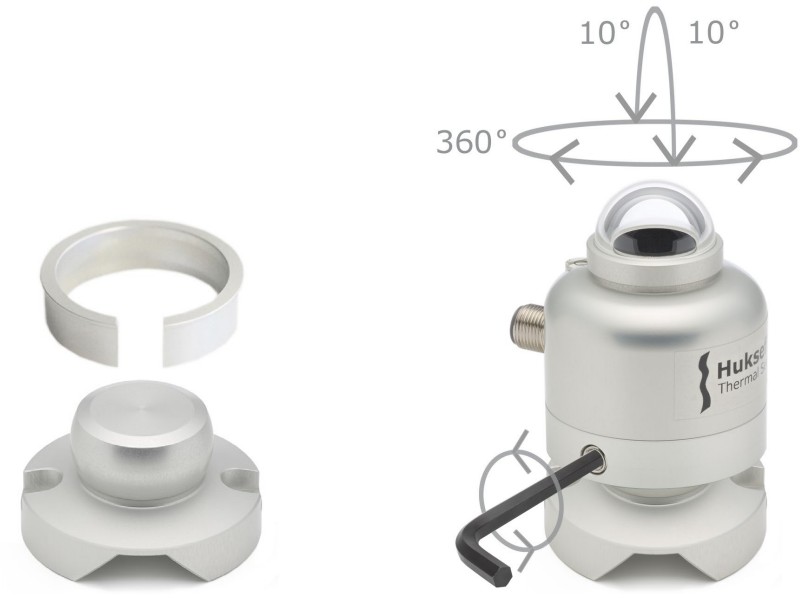

Figure 5.4.1 *On the left SR05's ball levelling including shim (mounting bolts not displayed) and on the right SR05 placed on the ball levelling mount. Loosen the countersunk set screw on SR05's side to unlock, allowing placement of the ball head and SR05 levelling, and tighten it to lock the ball head mechanism. A 4 mm hex key is the only tool needed to place and remove the ball levelling and to allow and disallow levelling adjustment. The shim, included when ordering ball levelling, allows for smooth levelling and should be positioned properly in the centre of the bottom plate of SR05.*

5.4.1 Placing SR05's ball levelling shim

When ordering SR05 pyranometer and its optional ball levelling or when exchanging a SR05 sensor on a ball levelling mount (retrofitting), the user has to ensure a dedicated shim is placed properly in the centre of the bottom plate of SR05. The aluminium shim ensures a secure fit between SR05 and ball levelling and allows the ball head to rotate smoothly for easy levelling. The shim, a loose set screw, a 4 mm hex key, two M5x20 mounting bolts and two M5 nuts are included when ordering the BL01 or TMBL01 ball levelling mount.

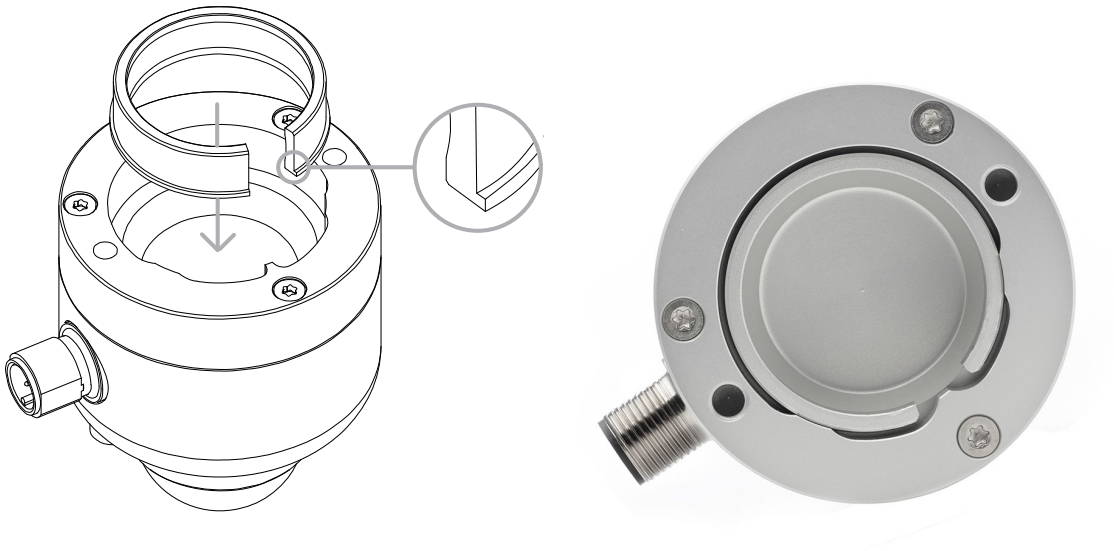

Figure 5.4.1.1 *Line drawing indicating placement of the aluminium shim and photo showing the shim properly positioned in the centre of SR05's bottom plate. Note the position of the protruding ledge when placing the shim.*

The shim can be placed into SR05's bottom plate following these steps:

1) If your SR05 has a small black plastic cover cap on the countersunk set screw opening on SR05's side, remove it. A small flathead screwdriver may be used. Then insert the loose set screw with a 4 mm hex key by turning the hex key clockwise until the screw is only slightly protruding (sticking out).
2) Hold SR05 in one hand, the shim in the other.
3) Ensure the orientation of the shim fits with that of SR05's bottom plate. Note the position of the protruding ledge (see Figure 5.5.1).
4) Pinch the shim slightly in order to reduce its diameter and to make it fit easily into SR05's bottom plate.
5) While pinching, push the shim into its position on SR05's bottom plate. The shim is placed.

Continue with the following section for mounting and levelling SR05 with ball levelling.

5.4.2 Mounting and levelling SR05 with BL01 or TMBL01

When the shim is properly in place (see steps 1 to 5), SR05 can be mounted and levelled using BL01 or TMBL01. Continue with the following steps:

6) Mount the ball levelling to a surface or platform with its M5 bolts and nuts. See chapter on tooling required.

7) SR05, with its shim positioned, can now be placed on the ball levelling mount. Gently push the sensor onto the ball head until it clicks.

8) The ball head can be rotated 360 ° and allows angle compensation on non-horizontal surfaces up to 10 °.

9) When SR05 is mounted and levelled, judging by its bubble level, lock the ball head mechanism by turning the set screw clockwise with a 4 mm hex key until it is tightened. The set screw should be countersunk and not protruding (not sticking out).

A similar approach is followed when levelling SR05 on its tube mount in the field:

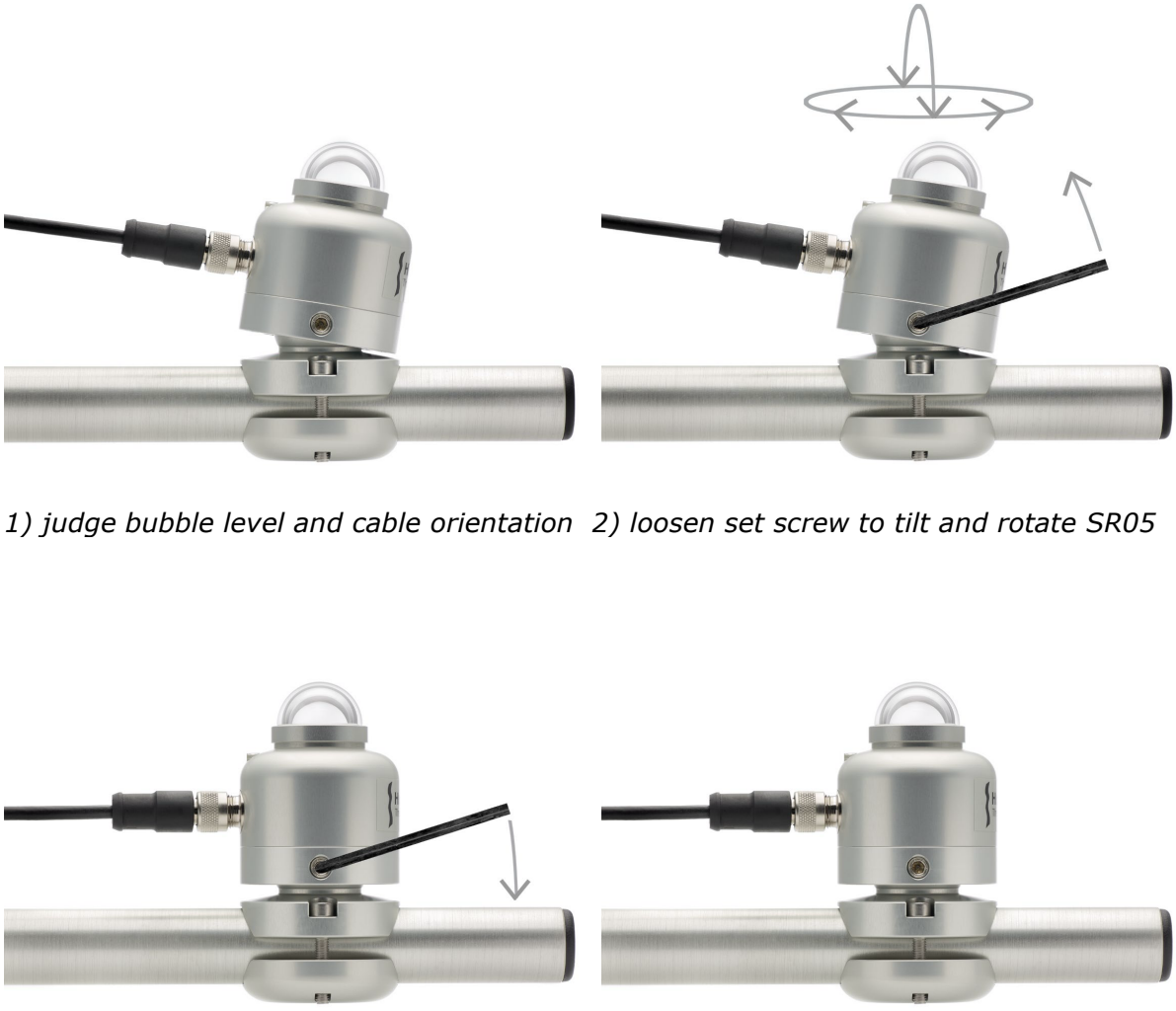

1) judge bubble level and cable orientation *2) loosen set screw to tilt and rotate SR05*

3) tighten set screw to lock ball levelling *4) SR05 is mounted and levelled*

Figure 5.4.2.1 *Levelling steps for SR05 when mounted on tube mount with ball levelling*

5.4.3 Removing the ball levelling mount and its shim

1) Loosen SR05's countersunk set screw with a 4 mm hex key by turning the hex key counter clockwise until the screw is slightly protruding (sticking out).
2) Hold SR05 in one hand, the ball levelling mount in the other.
3) Separate SR05 from the ball levelling mount by gently pulling out the ball levelling mount. Make sure the glass dome is protected at all times.

When (TM)BL01's ball head is not inserted in SR05, the shim makes a minor rattling noise when moving SR05. This is normal, caused by mechanical freedom between the two parts.

The shim can be removed from SR05's bottom plate by hand with the assistance of a small flathead screwdriver. See the chapter on tooling required. Let the screwdriver gently tip the shim out. When removing or placing the shim, make sure the glass dome is protected at all times.

5.5 Electrical connection of SR05 series: wiring diagram

The instrument must be powered by an external power supply, providing an operating voltage in the range from 5 to 30 VDC. SR05-D1A3 offers irradiance in W/m^2 as a digital output (Modbus over RS-485) and as an analogue 0 to 1 V output. SR05-D2A2 offers irradiance in W/m^2 as a digital output (Modbus over TTL) and as an analogue 4 to 20 mA output.

This user manual covers use of two digital sensors in the SR05 series range: SR05-D1A3 and SR05-D2A2. Specifications of these versions differ from those of the digital SR05-D1A3-PV version and of the analogue version of model SR05: SR05-A1. For SR05-D1A3-PV or SR05-A1 use, consult the separate SR05-D1A3-PV or SR05-A1 user manual.

Table 5.5.1 *Wiring diagram of SR05-D1A3*

PIN	WIRE	SR05-D1A3 Modbus over RS-485	SR05-D1A3 0 to 1 V output
1	Brown	VDC [+]	VDC [+]
4	Black	VDC [−]	VDC [−]
3	Blue	not connected	0 to 1 V output
2	White	RS-485 B / B' [+]	not connected
5	Grey	RS-485 A / A' [−]	not connected
	Yellow	shield	shield

Note 1: at the connector-end of the cable, the shield is connected to the connector housing
Note 2: it is not possible to use SR05-D1A3's digital and analogue outputs at the same time

Table 5.5.2 *Wiring diagram of SR05-D2A2*

PIN	WIRE	SR05-D2A2 Modbus over TTL	SR05-D2A2 4 to 20 mA output
1	Brown	VDC [+]	VDC [+]
4	Black	common	not connected
3	Blue	VDC [−]	4 to 20 mA output
2	White	TTL [Tx]	not connected
5	Grey	TTL [Rx]	not connected
	Yellow	shield	shield

Note 1: at the connector-end of the cable, the shield is connected to the connector housing
Note 2: it is not possible to use SR05-D2A2's digital and analogue outputs at the same time



With SR05-D2A2 over TTL, a potential difference exists between the VDC [-] (blue wire) and the common (black wire). This potential difference depends on the current drawn by the sensor. Care must be taken not to short circuit these wires. The TTL

[Tx] (white wire) and TTL [Rx] (grey wire) signals are referenced with respect to the common (black wire). If the TTL device to which SR05-D2A2 is connected requires external power, this power must be drawn from a separate power supply with a floating potential with respect to the power supply used by SR05-D2A2.

5.6 Grounding and use of the shield

Grounding and shield use are the responsibility of the user. The cable shield (called shield in the wiring diagram) is connected to the aluminium instrument body via the connector. In most situations, the instrument will be bolted on a mounting platform that is locally grounded. In these cases the shield at the cable end should not be connected at all. When a ground connection is not obtained through the instrument body, for instance in laboratory experiments, the shield should be connected to the local ground at the cable end. This is typically the ground or low voltage of the power supply or the common of the network. In exceptional cases, for instance when both the instrument and a datalogger are connected to a small size mast, the local ground at the mounting platform is the same as the network ground. In such cases ground connection may be made both to the instrument body and to the shield at the cable end.

5.7 Using SR05-D1A3's analogue 0 to 1 V output

SR05-D1A3 gives users the option to use 0 to 1 V output instead of its digital output. When using 0 to 1 V output, please read this chapter first. When opting solely for SR05-D1A3's digital output, please continue with the next chapter on SR05-D1A3: chapter 5.9.

Using the 0 to 1 V output provided by SR05-D1A3 is easy. The instrument can be connected directly to commonly used datalogging systems. The irradiance, E, in W/m^2 is calculated by measuring the SR05-D1A3 output, a voltage U, in V, and then multiplying by the transmitted range r. The transmitted range is provided with SR05-D1A3 on its product certificate. By convention 0 W/m^2 irradiance corresponds with 0 V transmitter output voltage. The transmitted range, which is the irradiance at output voltage of 1 V, and is typically 1600 W/m^2. The transmitted range can be adjusted at the factory upon request.

The central equation governing SR05-D1A3 is:

$$E = r \cdot U \qquad \text{(Formula 5.7.1)}$$

The standard setting is: E = 1600·U. See chapter 5.5 and the diagram below for electrical connections to voltmeters, when using SR05-D1A3's 0 to 1 V output.

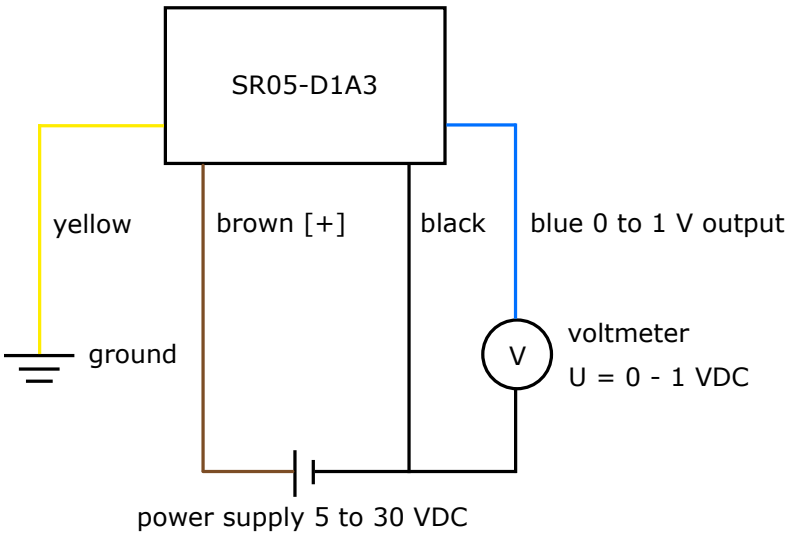

Figure 5.7.1 *Electrical diagram of the connection of SR05-D1A3 to a typical voltmeter or datalogger with the capacity to measure voltage signals. SR05-D1A3 operates on a supply voltage of 5 to 30 VDC.*

5.8 Using SR05-D2A2's analogue 4 to 20 mA output

SR05-D2A2 gives users the option to use 4 to 20 mA output instead of its digital output. When using 4 to 20 mA output, please read this chapter first. When opting solely for SR05-D2A2's digital output, please continue with the next chapter on SR05-D2A2: chapter 5.10.

Using the 4 to 20 mA output provided by SR05-D2A2 is easy. The instrument can be connected directly to commonly used datalogging systems. The irradiance, E, in W/m^2 is calculated by measuring the SR05-D2A2's output, a small current I, subtracting 4×10^{-3} A from it, and then multiplying by the transmitted range r. The transmitted range is provided with SR05-D2A2 on its product certificate. By convention 0 W/m^2 irradiance corresponds with 4×10^{-3} A transmitter output current I. The transmitted range, which is the irradiance at output current of 20×10^{-3} A, and is typically 1600 W/m^2. The transmitted range can be adjusted at the factory upon request.

The central equation governing SR05-D2A2 is:

$$E = r \cdot (I - 4 \times 10^{-3}) / (16 \times 10^{-3}) \qquad \text{(Formula 5.8.1)}$$

The standard setting is: $E = 1600 \cdot (I - 4 \times 10^{-3}) / (16 \times 10^{-3})$

To keep offsets resulting from heat dissipation by the electronics to a minimum, it is recommended to power the 4 to 20 mA current output from a 12 VDC power supply.

Table 5.8.1 *Requirements for data acquisition and amplification equipment*

Capability to - measure 4-20 mA or - measure currents or - measure voltages	SR05-D2A2 has a 4-20 mA output. There are several possibilities to handle this signal. It is important to realise that the signal wires not only act to transmit the signal but also act as power supply for the 4-20 mA current loop circuit. SR05-D2A2 operates on a supply voltage of 5 to 30 VDC. Some dataloggers have a 4-20 mA input. In that case SR05-D2A2 can be connected directly to the datalogger. Some dataloggers have the capability to measure currents. In some cases the datalogger accepts a voltage input. Usually a 100 Ω precision resistor is used to convert the current to a voltage (this will then be in the 0.4 – to 2 VDC range). This resistor must be put in series with the blue wire of the sensor. See next page and chapter 5.5 for electrical connections.

See chapter 5.5 and the diagrams below for electrical connections to am- and voltmeters, when using SR05-D2A2's 4 to 20 mA output.

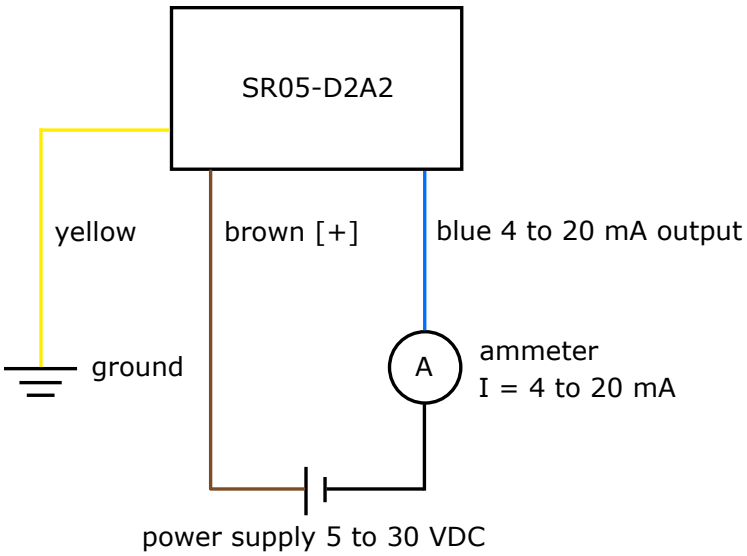

Figure 5.8.1 *Electrical diagram of the connection of SR05-D2A2 to a typical ammeter or datalogger with capacity to measure current signals. SR05-D2A2 operates on a supply voltage of 5 to 30 VDC.*

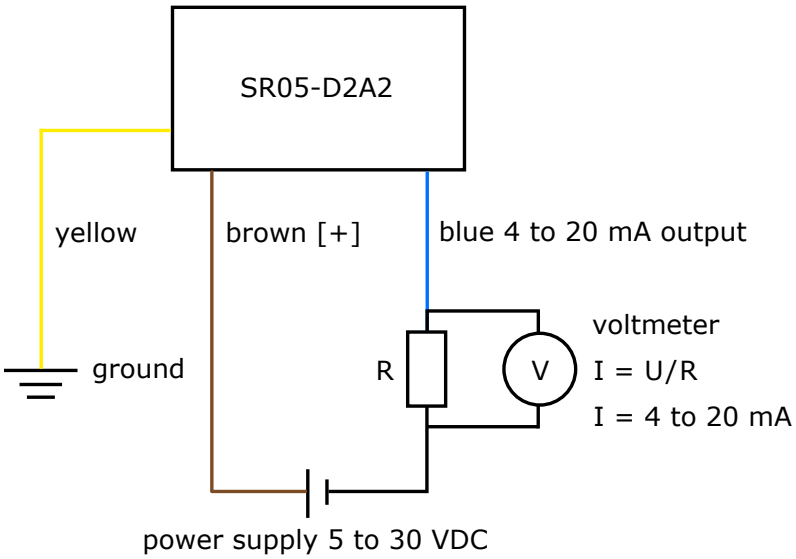

Figure 5.8.2 *Electrical diagram of the connection of SR05-D2A2 to a typical voltmeter or datalogger with the capacity to measure voltage signals. Usually a 100 Ω shunt resistor (R) is used to convert the current to a voltage. SR05-D2A2 operates on a supply voltage of 5 to 30 VDC.*

5.9 Using SR05-D1A3's and SR05-D2A2's digital output

When using SR05's digital output, SR05-D1A3 can be connected to an RS-485 network, whereas SR05-D2A2 can be connected to TTL devices. Both models can be connected to a PC for communication with the Sensor Manager software.

5.10 Connecting SR05-D1A3 to an RS-485 network

SR05-D1A3 is suited for a two-wire (half-duplex) RS-485 network. In such a network SR05-D1A3 acts as a slave, receiving data requests from the master. An example of the topology of an RS-485 two-wire network is shown in the figure below. SR05-D1A3 is powered from 5 to 30 VDC. The power supply is not shown in the figure. The VDC [-] power supply ground must be connected to the common line of the network.

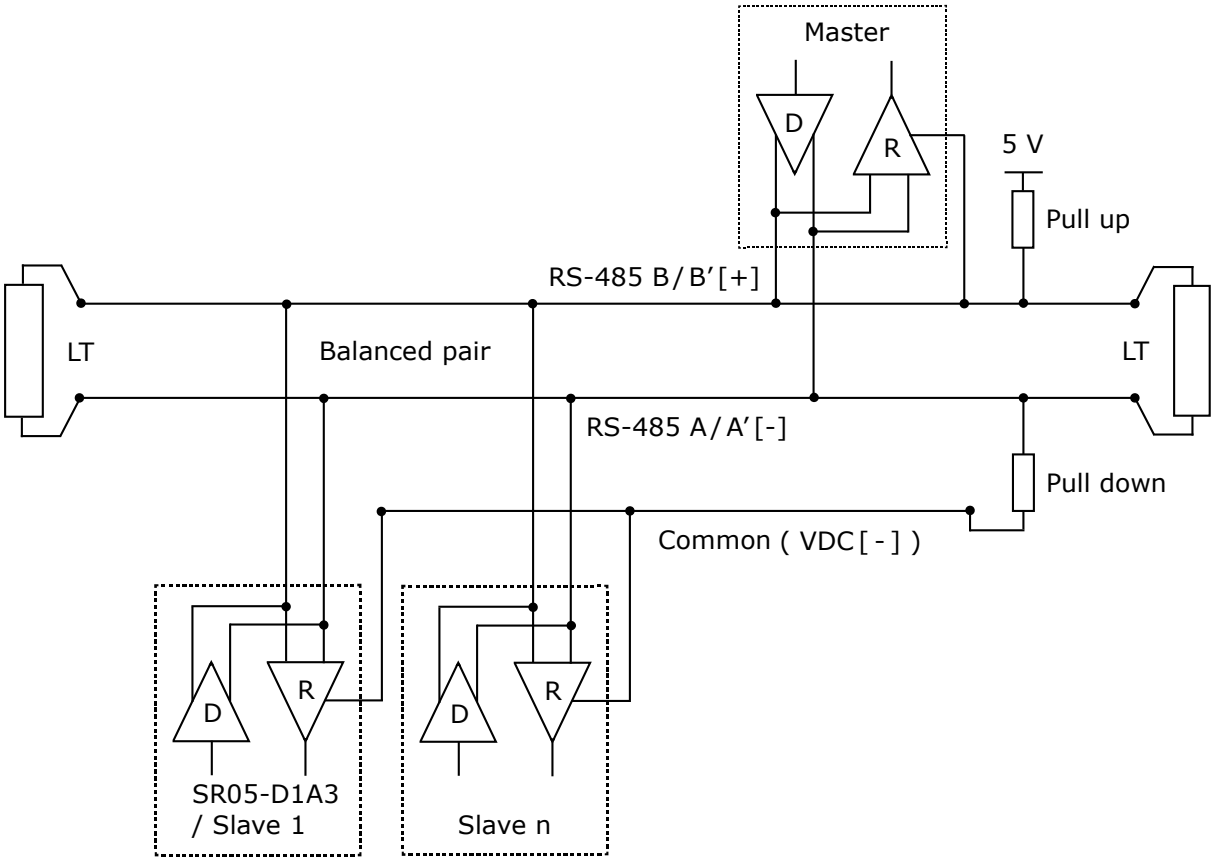

Figure 5.10.1 *Typical topology of a two-wire RS-485 network, figure adapted from: Modbus over serial line specification and implementation guide V1.02 (www.modbus.org). The power supply is not shown in this figure.*

After the last nodes in the network, on both sides, line termination resistors (LT) are required to eliminate reflections in the network. According to the EIA/TIA-485 standard, these LT have a typical value of 120 to 150 Ω. Never place more than two LT on the network and never place the LT on a derivation cable. To minimise noise on the network when no transmission is occurring, a pull up and pull down resistor are required. Typical values for both resistors are in the range from 650 to 850 Ω.

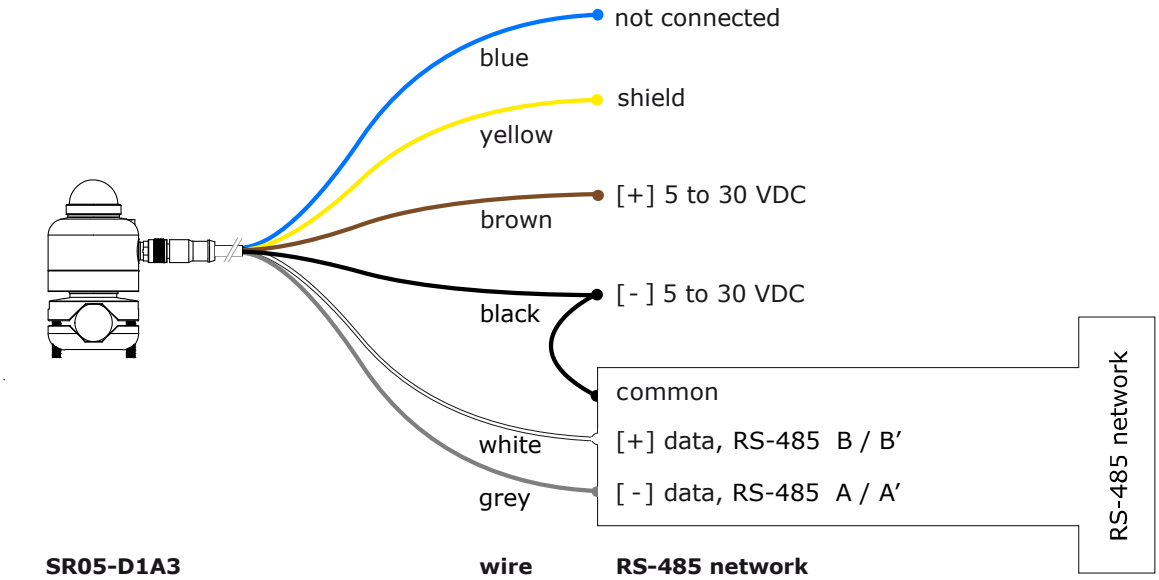

Figure 5.10.2 *Connection of SR05-D1A3 to an RS-485 network. SR05-D1A3 is powered by an external power supply of 5 to 30 VDC.*

5.11 Connecting SR05-D2A2 to a TTL device

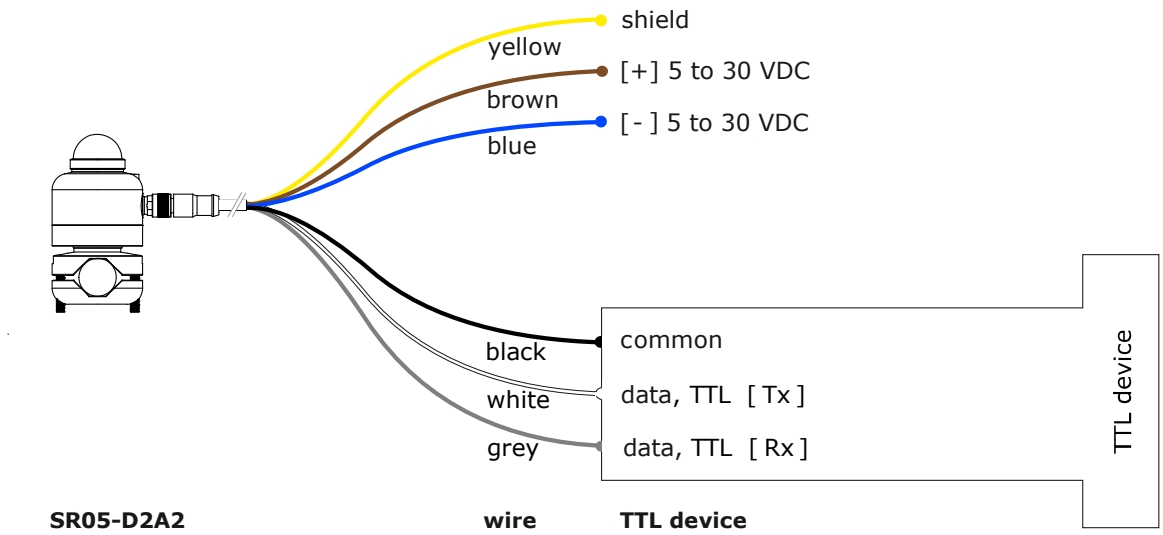

Figure 5.11.1 *Connection of SR05-D2A2 to a TTL device, in case SR05-D2A2 is powered by an external power supply of 5 to 30 VDC. SR05-D2A2 acts as Data Communication Equipment (DCE).*



With SR05-D2A2 over TTL, a potential difference exists between the VDC [-] (blue wire) and the common (black wire). This potential difference depends on the current drawn by the sensor. Care must be taken not to short circuit these wires. The TTL [Tx] (white wire) and TTL [Rx] (grey wire) signals are referenced with respect to the common (black wire). If the TTL device to which SR05-D2A2 is connected requires external power, this power must be drawn from a separate power supply with a floating potential with respect to the power supply used by SR05-D2A2.

5.12 Connecting SR05 to a PC

Both SR05-D1A3 and SR05-D2A2 can be accessed via a PC. In that case communication with the sensor is done via the user interface offered by the Sensor Manager software (see the next chapters) or by another Modbus testing tool.

5.12.1 Connecting SR05-D1A3 to a PC

Depending on the available ports on the PC, either an RS-485 to USB converter or an RS-485 to RS-232 converter is used. The figure below shows how connections are made. The converter must have galvanic isolation between signal input and output to prevent static electricity or other high-voltage surges to enter the data lines. An external power supply is required to power the SR05-D1A3 (5 to 30 VDC). An RS-485 to USB converter is usually powered via the USB interface: in this case no external power is needed to feed the converter. If an RS-485 to RS-232 converter is used, this converter should be powered by an external source. This may be the same supply used for the SR05-D1A3.

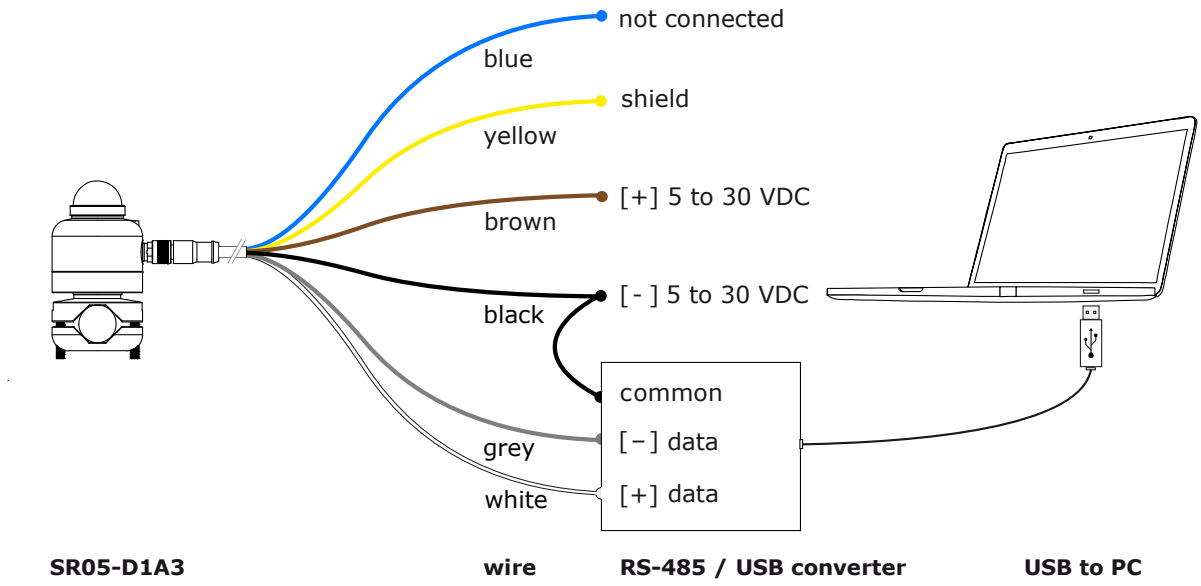

Figure 5.12.1.1 *Connecting SR05-D1A3 to an RS-485 to USB converter and a PC*

5.12.2 Connecting SR05-D2A2 to a PC

Depending on the available ports on the PC, either a TTL to USB converter or a TTL to RS-232 converter is used. The figure on the next page shows how connections are made. The converter must have galvanic isolation between signal input and output to prevent static electricity or other high-voltage surges to enter the data lines. An external power supply is required to power the SR05-D2A2 (5 to 30 VDC). A TTL to USB converter is usually powered via the USB interface: in this case no external power is needed to feed the converter. If a TTL to RS-232 converter is used, this converter should be powered by an external source. This may be the same supply used for the SR05-D2A2.

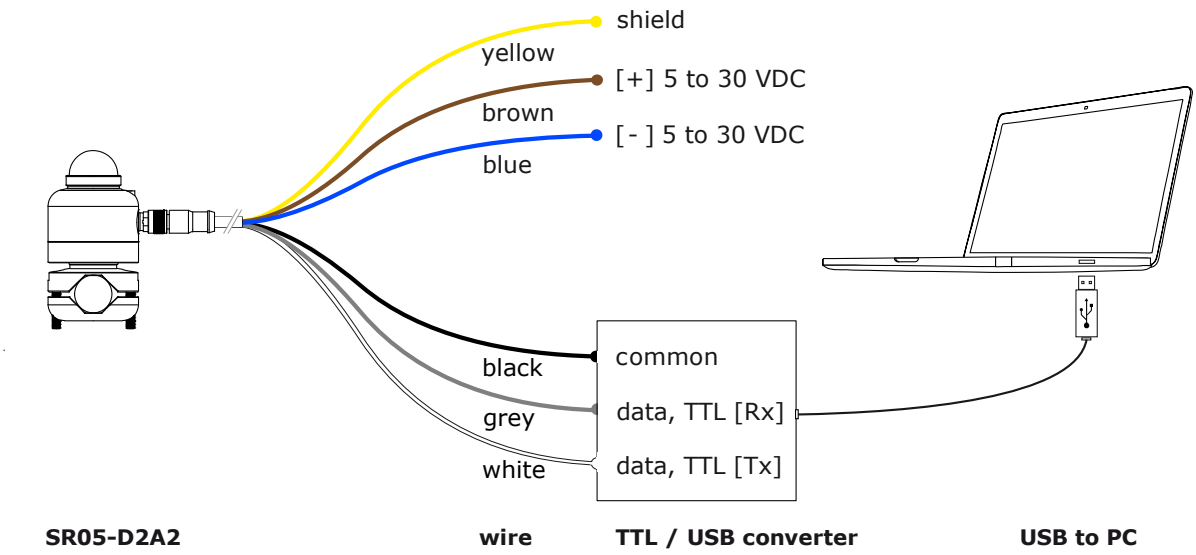

Figure 5.12.2.1 *Connecting SR05-D2A2 to a TTL to USB converter and a PC. SR05-D2A2 acts as Data Communication Equipment (DCE).*

6 Communication with SR05

6.1 PC communication: Sensor Manager software

The digital SR05 series can be accessed via a PC. In that case the communication with the sensor is done via the user interface offered by the Hukseflux Sensor Manager software or by another Modbus testing tool. The Sensor Manager can be downloaded by the user via www.hukseflux.com/page/downloads. Alternatively, there are links to testing tools, paid or freeware, available at www.modbus.org.
This chapter describes the functionality of the Sensor Manager only.

The Hukseflux Sensor Manager software provides a user interface for communication between a PC and SR05. It allows the user to locate, configure and test one or more SR05's and to perform simple laboratory measurements using a PC. The Sensor Manager's most common use is for initial functionality testing and modification of the SR05 Modbus address and communication settings. It is not intended for long-term continuous measurement purposes. For available software updates of the Sensor Manager, please check www.hukseflux.com/page/downloads.

6.1.1 Installing the Sensor Manager

Running the Sensor Manager requires installation of the latest version of Java Runtime Environment software. Java Runtime Environment may be obtained free of charge from www.java.com. The SR05 specifications overview (Table 3.1.1) shows the system and software requirements for using a PC to communicate with SR05.

1) Download the Hukseflux Sensor Manager via www.hukseflux.com/page/downloads.

2) Unzip the downloaded files and copy the folder "Hukseflux Sensor Manager" to a folder on a PC. For proper installation the user should have administrator rights for the PC.

3) Double-click "Hukseflux_Sensor_Manager.jar" in the folder "Hukseflux Sensor Manager". This will start up the Sensor Manager.

6.1.2 Trouble shooting during Sensor Manager installation

- When Java Runtime Environment software is not installed, a Windows message comes up, displaying "the file "Hukseflux_Sensor_Manager.jar" could not be opened". The solution is to install Java Runtime Environment on the PC and try again.

6.1.3 Sensor Manager: main window

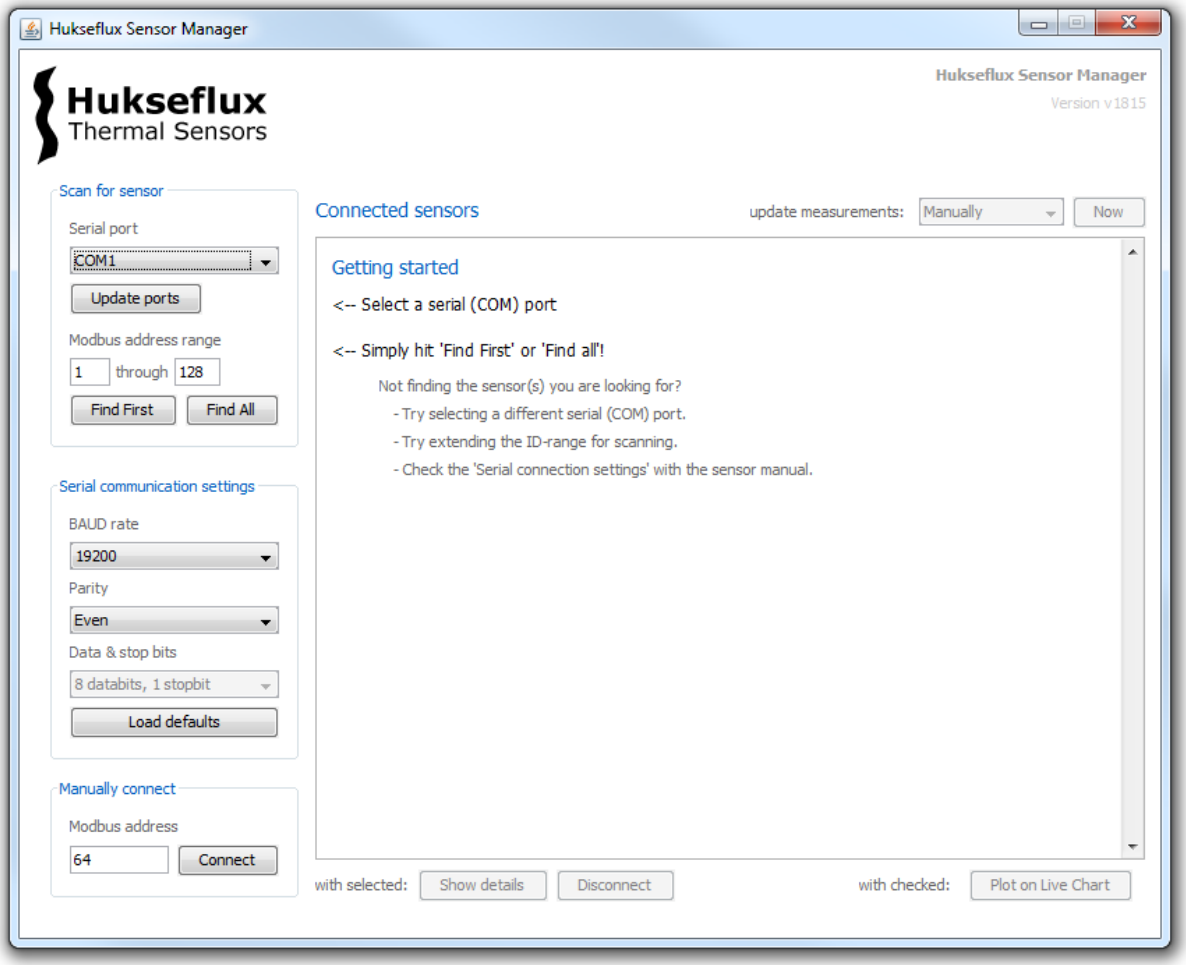

Figure 6.1.3.1 *Main window of the Sensor Manager*

When the Sensor Manager is started and a digital SR05 is connected to the PC, the user can communicate with the instrument.

If the instrument address and communication settings are known, the serial connection settings and the Modbus address can be entered directly. Clicking “Connect” will establish contact.

If the instrument address and communication settings are not known, the instrument is found by using the “Find First” or “Find All” function. The Sensor Manager scans the specified range of Modbus addresses, however only using the “Serial connection settings” as indicated on screen. When only one sensor is connected, using “Find First” is suggested because the operation stops when a sensor is found. “Find all” will continue a scan of the complete range of Modbus addresses and may take extra time.

If the “Find First” or “Find all” operation does not find instruments, a dialog box opens, asking to confirm a scan of the address range using all possible communication settings.

The time this operation takes, depends on the address range to be scanned. To complete a scan of 247 addresses will take over 15 minutes. When an instrument is found, a dialog box opens providing its serial number, Modbus address and communication settings. Communicating with the instrument is possible after changing the communication settings and Modbus address in the main window to the values of the instrument, and then clicking "Connect".

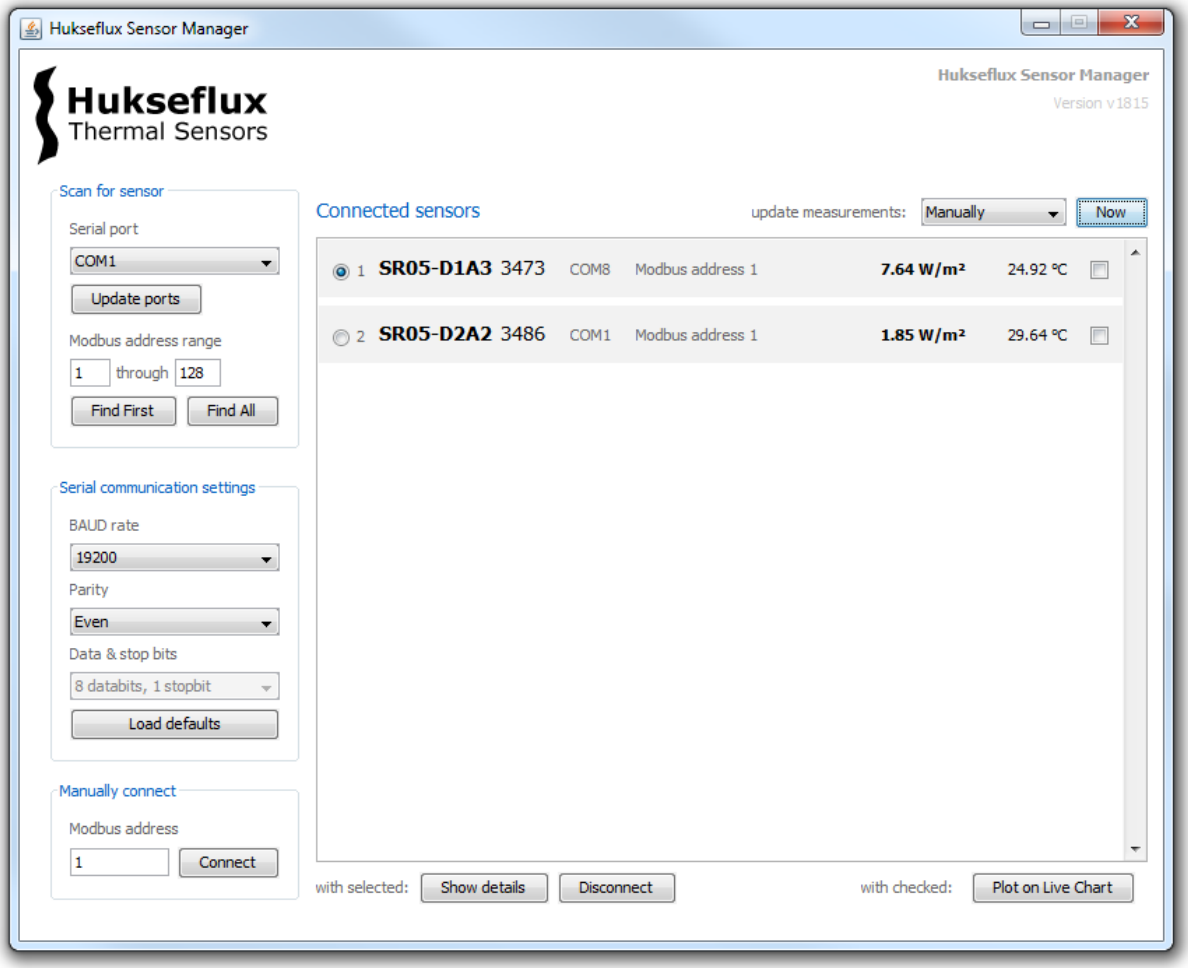

Figure 6.1.3.2 *Sensor Manager main window with two connected SR05's*

When an instrument is found, temperature and irradiance data are displayed. Updates are done manually or automatically. Automatic updates can be made every second, every 5 seconds or every minute.

6.1.4 Sensor Manager: plotting data

When the "Plot on Live Chart" button in the lower right corner is clicked the "Plot window" opens. A live graph is shown of the measurement with the selected instrument. The x-axis, time, is scaled automatically to display data of the complete measurement period. After checking the box "Show tail only", only the last minutes of measured data are displayed. When the "update interval" is 1 second, the "Show tail only" function is

available after around 10 minutes of data collection. The y-axis displays the measured irradiance in W/m^2. The Y-axis automatically scales to display the full measured range.

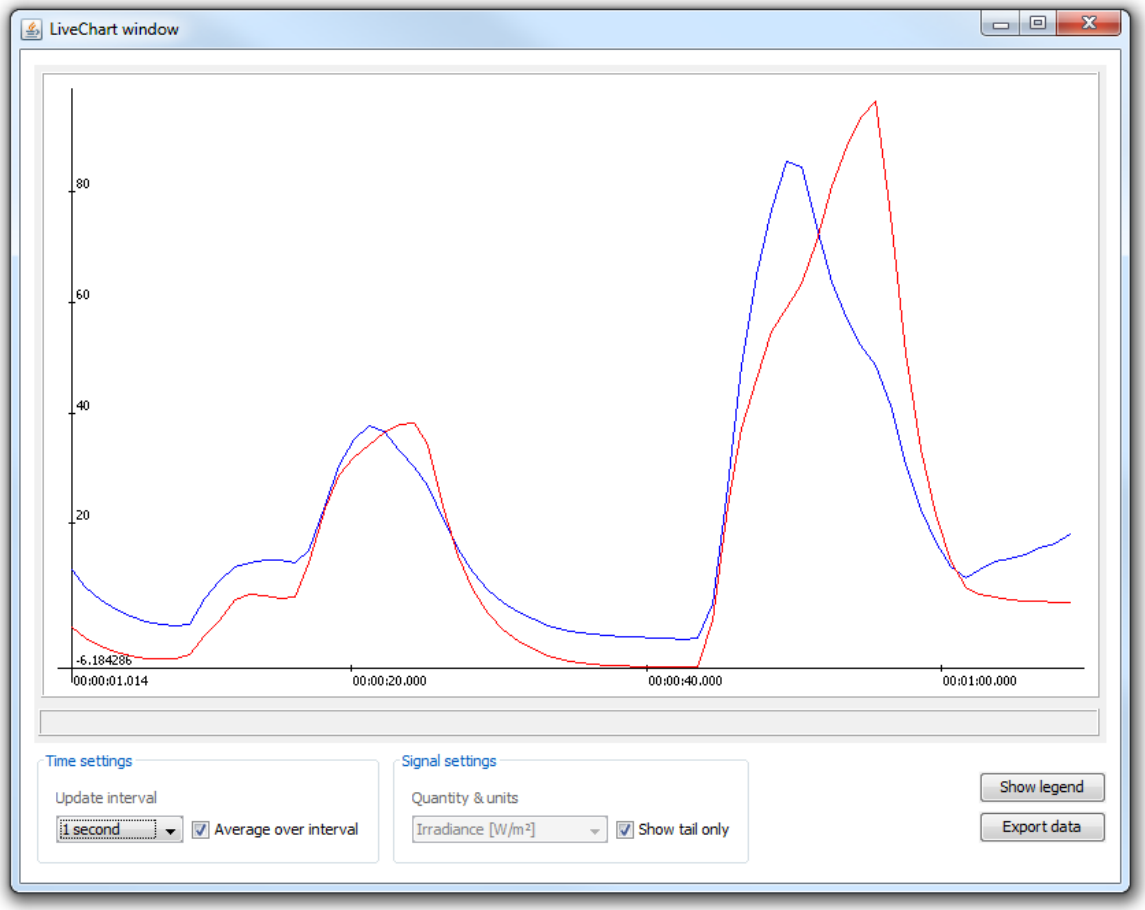

Figure 6.1.4.1 *Example of a SR05 irradiance plot in the Sensor Manager*

6.1.5 Sensor Manager: information about the instrument

The main window shows the "Show details" button, giving access to the "Sensor details" window. This window displays calibration results and calibration history, temperature coefficients and other properties of the selected instrument, as shown on the next page. The sensor serial number and all calibration information should match the information on the instrument label and on the product certificate.

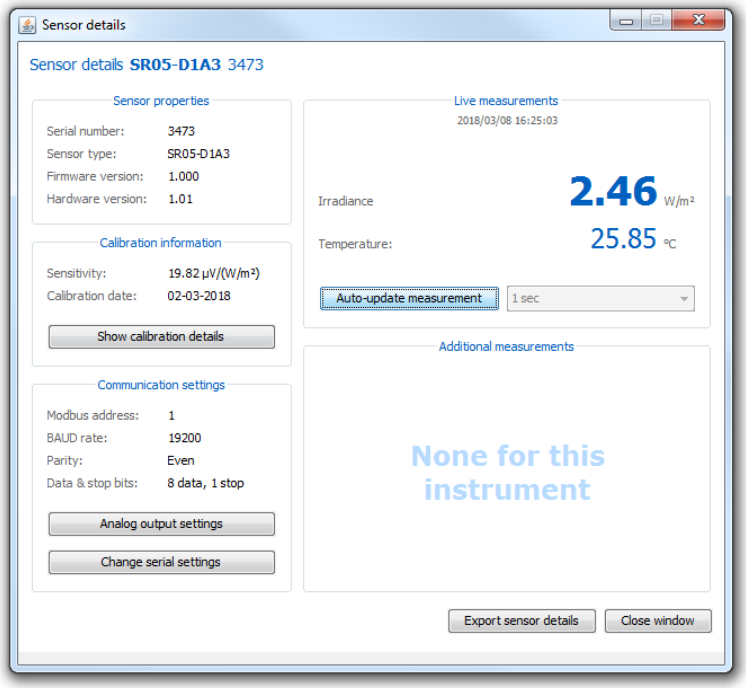

Figure 6.1.5.1 *Sensor details window in the Sensor Manager*

6.1.6 Sensor Manager: changing Modbus address and communication settings

In the "Sensor details" window the "Change serial settings" function opens the "Change serial communication settings" window, as shown in the figure below.

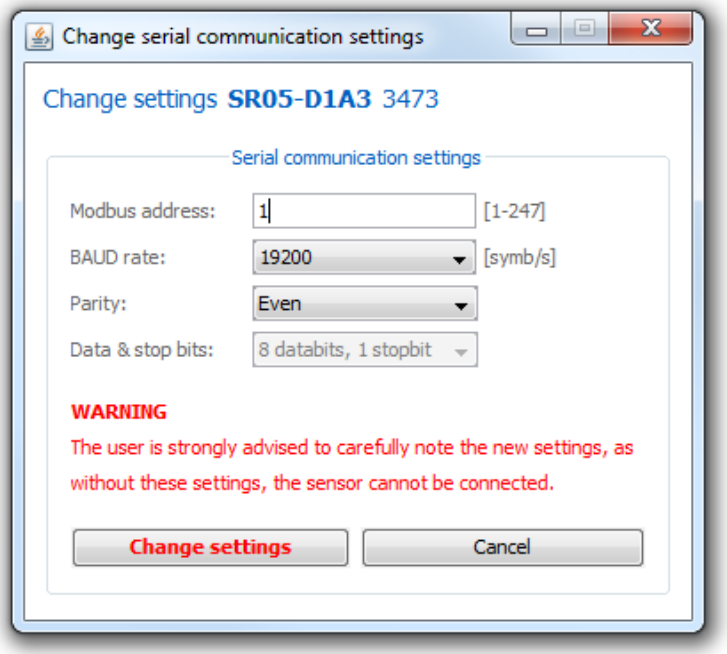

Figure 6.1.6.1 *Change serial communication settings window in the Sensor Manager*

When new communication settings or a new Modbus address are entered, these need to be confirmed by clicking "Change settings". The instrument will then automatically restart. In case the "Change settings" function is not activated, the original settings remain valid. If the Modbus address is changed, the Sensor Manager will automatically reconnect with the instrument using the new address after restart.

6.1.7 Sensor Manager: adjustment of the sensitivity by power users

The Sensor Manager does not allow a "standard user" to change any settings that have a direct impact on the instrument output, i.e. the irradiance in W/m^2. However, in case the instrument is recalibrated it is common practice that the sensitivity is adjusted, and that the latest result is added to the calibration history records. This can be done after obtaining a password and becoming a "power user". Please contact the factory to obtain the password and to get directions to become a "power user".

Example: During a calibration experiment, the result might be that SR05 has an irradiance output in W/m^2 that is 990, whereas the standard indicates it should be 970. The SR05 output is in this example 2.06 % too high. The original sensitivity of 16.15×10^{-6} $V/(W/m^2)$ ought to be changed to 16.48, using registers 41 + 42. The old calibration result is recorded in the calibration history file. In case there are still older results these are moved over to higher register numbers 63 to 81.

6.2 Network communication: function codes, registers, coils

Warning: Using the same Modbus address for more than one device will lead to irregular behaviour of the entire network. This chapter describes function codes, data model and registers used in the SR05 firmware. Communication is organised according to the specifications provided by the Modbus Organization. These specifications are explained in the documents "Modbus application protocol v1.1b" and "Modbus over serial line v1.02". These documents can be acquired free of charge at www.modbus.org.

Table 6.2.1 *Supported Modbus function codes*

SUPPORTED MODBUS FUNCTION CODES	
FUNCTION CODE (HEX)	**DESCRIPTION**
0x01	Read Coils
0x02	Read Discrete Inputs
0x03	Read Holding Registers
0x04	Read Input Register
0x05	Write Single Coil
0x06	Write Single Holding Register
0x0F	Write Multiple Coils
0x10	Write Multiple Registers

Table 6.2.2 *Modbus data model*

MODBUS DATA MODEL		
PRIMARY TABLES	**OBJECT TYPE**	**TYPE OF**
Discrete input	Single bit	R
Coil	Single bit	R/W
Input register	16 bit word	R
Holding register	16 bit word	R/W

R = read only, W = write only, R/W = read / write

The instrument does not distinguish between *discrete input* and *coil;* neither between *input register* and *holding register.*

Table 6.2.3 *Format of data*

FORMAT OF DATA	DESCRIPTION
U16	Unsigned 16 bit integer
S16	Signed 16 bit integer
U32	Unsigned 32 bit integer
S32	Signed 32 bit integer
Float	IEEE 754 32 bit floating point format
String	A string of ASCII characters

The data format includes *signed* and *unsigned* integers. The difference between these types is that a *signed* integer passes on negative values, which reduces the range of the integer by half. Up to five 16 bit registers can be requested in one request; if requesting six or more registers, multiple requests should be used.

If the format of data is a signed or an unsigned 32 bit integer, the first register received is the most significant word (MSW) and the second register is the least significant word (LSW). This way two 16 bit registers are reserved for a 32 bit integer. If the format of data is *float*, it is a 32 bit floating point operator and two 16 bit registers are reserved as well. Most network managing programs have standard menus performing this type of conversion. In case manual conversion is required, see the appendix on conversion of a floating point number to a decimal number. MSW and LSW should be read together in one request. This is necessary to make sure both registers contain the data of one internal voltage measurement. Reading out the registers with two different instructions may lead to the combination of LSW and MSW of two measurements at different points in time.

An Unsigned 32 bit integer can be calculated by the formula: (MSW x 2^{16})+LSW = U32**.** An example of such a calculation is available in the paragraph "Network communication: example master request to SR05".

Your data request may need an offset of +1 for each SR05 register number, depending on processing by the network master. Example: SR05 register number 7 + master offset = 7 + 1 = master register number 8. Consult the manual of the device acting as the local master.

Table 6.2.4 *Modbus registers 0 to 11, measurements. For basic operation, Hukseflux recommends to read out registers 2 + 3 for solar radiation, register 6 for instrument body temperature and register 40 for the sensor serial number.*

MODBUS REGISTERS 0-11				
REGISTER ADDRESS	**PARAMETER**	**DESCRIPTION OF CONTENT**	**TYPE OF**	**FORMAT OF DATA**
0	Modbus address	Sensor address in Modbus network, default = 1	R/W	U16
1	Serial communication settings	Sets the serial communication, default = 5	R/W	U16
2 + 3	Irradiance	signal in x 0.01 W/m²	R	S32
4 + 5	Factory use only			
6	Sensor body temperature	In x 0.01 ˚C	R	S16
7	Sensor electrical resistance	In x 0.1 Ω	R	U16
8	Scaling factor irradiance	Default = 100	R	U16
9	Scaling factor temperature	Default = 100	R	U16
10 + 11	Sensor voltage output	In x 10^{-9} V	R	S32
12 to 31	Factory use only			

Register 0, *Modbus address,* contains the Modbus address of the sensor. This allows the Modbus master to detect the slave, SR05-D1A3, in its network. The address can be changed; the value of the address must be between 1 and 247. The default Modbus address is 1.
Note: The sensor needs to be restarted before changes become effective.

Register 1, *Serial communication settings*, is used to enter the settings for baud rate and the framing of the serial data transfer. Default setting is setting number 5: *19200 baud, 8 data bits, even parity and 1 stop bit*. Setting options are shown in the table below.
Note: The sensor needs to be restarted before changes become effective.

Table 6.2.5 *Setting options of register 1*

SETTING OPTIONS				
SETTING NUMBER	**BAUD RATE**	**DATABITS**	**STOPBITS**	**PARITY**
1	9600	8	1	none
2	9600	8	1	even
3	9600	8	1	odd
4	19200	8	1	none
5 (= default)	19200	8	1	even
6	19200	8	1	odd
7	38400	8	1	none
8	38400	8	1	even
9	38400	8	1	odd
10	115200	8	1	none
11	115200	8	1	even
12	115200	8	1	odd

Register 2 + 3, *Irradiance,* provides the solar radiation output in 0.01 W/m². The value given must be divided by 100 to get the value in W/m². MSW and LSW should be read together in one request.

Register 6, *Instrument body temperature*, provides the temperature of the instrument body in 0.01 °C. The data must be divided by 100 to achieve the value in °C.

Register 7, *Sensor electrical resistance*, sensor resistance in 0.1 Ω. The data needs to be divided by 10 to get the value in Ω. This register returns a 0 by default. To read the resistance, first a measurement has to be performed. This can be done by writing 0xFF00 to coil 2. Hukseflux recommends to use this function only when necessary for diagnostics in case of sensor failure.

Register 8, *Scaling factor irradiance*, default scaling factor is 100

Register 9, *Scaling factor temperature*, default scaling factor is 100.

Register 10 + 11, *Sensor voltage output*, sensor voltage output signal of the thermopile in x 10^{-9} V.

Table 6.2.6 *Modbus registers 32 to 62, sensor and calibration information*

MODBUS REGISTERS 32-62				
REGISTER ADDRESS	**PARAMETER**	**DESCRIPTION OF CONTENT**	**TYPE OF**	**FORMAT OF DATA**
32 to 35	Sensor model	Part one of sensor description	R	String
36 to 39	Sensor model	Part two of sensor description	R	String
40	Sensor serial number		R	U16
41 + 42	Sensor sensitivity	In x 10^{-6} V/(W/m^2)	R	Float
43	Response time	In x 0.1 s	R	U16
44	Sensor resistance	In x 0.1 Ω	R	U16
45	Reserved	Always 0	R	U16
46 + 47	Sensor calibration date	Calibration date of the sensor in YYYYMMDD	R	U32
48 to 60	Factory use			
61	Firmware version		R	U16
62	Hardware version		R	U16

Registers 32 to 39, *Sensor model*, String of 8 registers. These registers will return 8 numbers which can be decoded to find the sensor model name. SR05-D1A3 sensors with serial number 3819 or higher and SR05-D2A2 sensors with serial number 3524 or higher use method A for storing the name in these registers. Sensors with lower serial numbers than these (mostly SR05-DA1 and SR05-DA2 sensors) use method B. Method A and B are explained in Appendix 9.12 of this manual.

Register 40, *Sensor serial number.*

Register 41 + 42, *Sensor sensitivity,* the sensitivity of the sensor in x 10^{-6} V/(W/m²). Format of data is *float.*

Register 43, *Response time,* the response time of the sensor as measured in the factory in x 0.1 s. The value must be divided by 10 to get the value in s.

Register 44, *Sensor electrical resistance,* returns the electrical resistance measured during the sensor calibration. The resistance is in x 0.1 Ω and must be divided by 10 to get the value in Ω.

Register 46 + 47, *Sensor calibration date*, last sensor calibration date, from which the sensitivity in register 41 and 42 was found, in YYYYMMDD.

Register 61, *Firmware version*.

Register 62, *Hardware version*.

Table 6.2.7 *Modbus registers 63 to 82, calibration history*

MODBUS REGISTERS 63-82				
REGISTER ADDRESS	**PARAMETER**	**DESCRIPTION OF CONTENT**	**TYPE OF**	**FORMAT OF DATA**
63 + 64	Sensor sensitivity history 1	In x 10^{-6} V/(W/m^2) Default value is 0	R	Float
65 + 66	Calibration date history 1	Former calibration date of the sensor in YYYYMMDD Default value is 0	R	U32
67 + 68	Sensor sensitivity history 2	See register 63 + 64	R	Float
69 + 70	Calibration date history 2	See register 65 + 66	R	U32
71 + 72	Sensor sensitivity history 3	See register 63 + 64	R	Float
73 + 74	Calibration date history 3	See register 65 + 66	R	U32
75 + 76	Sensor sensitivity history 4	See register 63 + 64	R	Float
77 + 78	Calibration date history 4	See register 65 + 66	R	U32
79 + 80	Sensor sensitivity history 5	See register 63 + 64	R	Float
81 + 82	Calibration date history 5	See register 65 + 66	R	U32

Register 63 to 82: Only accessible for writing by Sensor Manager *power users*: *power users* can write calibration history to registers 63 to 82. If default values are returned, no re-calibration has been written. Last calibration sensitivity and calibration date are available in register 41 + 42 and 46 + 47 respectively.



Please note that if your data request needs an offset of +1 for each SR05 register number, depending on processing by the network master, this offset applies to coils as well. Consult the manual of the device acting as the local master.

Table 6.2.8 *Coils*

COILS				
COIL	**PARAMETER**	**DESCRIPTION**	**TYPE OF**	**OBJECT TYPE**
0	Restart	Restart the sensor	W	Single bit
1	Reserved			
2	Check	Measure sensor electrical resistance	W	Single bit

Coil 0, *Restart*, when 0xFF00 is written to this coil the sensor will restart. If applied, a new Modbus address or new serial settings will become effective.

Coil 2, *Check*, when 0xFF00 is written to this coil the internal electronics will measure the electrical resistance of the thermopile. After the measurement, a new value will be written into register 7. Requesting to write this coil with a high repetition rate will result in irregular behaviour of the sensor; the check must be executed as an exceptional diagnostics routine only.

6.3 Network communication: getting started

Once it has the correct Modbus address and communication settings, SR05-D1A3 can be connected directly to an RS-485 network and a power supply. How to physically connect a sensor as a slave in a Modbus network is shown in chapter 5.11: Connecting a SR05-D1A3 to an RS-485 network. In such a connection the sensor is powered via an external power supply of 5 to 30 VDC. When the sensor is bolted onto a grounded mounting plate, which is usually the case, the shield is not connected to ground at the cable end.

Installing a SR05-D1A3 in the network also requires configuring the communication for this new Modbus device. This usually consists of defining a request that can be broadcast by the master. If the SR05-D1A3 is not already defined as a standard sensor type on the network, contact the supplier of the network equipment to see if a library file for the SR05-D1A3 is available.

Typical operation requires the master to make a request of irradiance data in registers 2 + 3, sensor temperature in register 6, and the sensor serial number in register 40 every 1 second, and store the 60 second averages. The data format of register 2 + 3 is a signed 32 bit integer and the temperature in register 6 is a signed 16 bit integer.

Up to five 16 bit registers can be requested in one request. In case six or more registers are requested in just one request, SR05-D1A3 will not respond. If requesting six or more registers, multiple requests should be used: SR05-D1A3 will respond as expected.

6.3.1 Adapting Modbus address and communication settings

Setting the instrument address and baud rate can be done in different ways:

- by connecting the sensor to the PC and using the Sensor Manager;
- by connecting the sensor to the PC and using another Modbus testing tool. There are links to different solutions available at www.modbus.org;
- by using the available network user interface software.

The Modbus address is stored in register 0 and has a default value of 1. A user may change the address to a value in the range of 1 to 247. The address value must be unique in the network. The communication settings are stored in register 1. The default setting is setting number 5 representing a communication with 19200 baud, even parity bit, 8 data bits and 1 stop bit. After a new address or communication setting is written the sensor must be restarted. This can be done by writing 0XFF00 to coil 0.

6.4 Network communication: example master request to SR05

Normal sensor operation consists of requesting the output of registers 2 + 3; the temperature compensated solar radiation. For quality assurance also the sensor serial number, register 40 and the temperature in register 6, are useful.

In this example a SR05 has address 64. The example requests the solar radiation (temperature compensated) register 2 + 3, sensor serial number, register 40, and the temperature of the instrument register 6. The values are represented in hexadecimals.

Note: 32 bit data are represented in 2 registers. MSW and LSW should be read together in one request.

Request for solar radiation, register 2 + 3:

Master Request:
[40] [03] [00][00] [00][04] [4B][18]

[40] = Modbus slave address, decimal equivalent = 64
[03] = Modbus function; 03 Read holding registers
[00][00] = Starting register, the master requests data starting from register 0.
[00][04] = Length, the number of registers the master wants to read. 4 registers
[4B][18] = CRC, the checksum of the transmitted data

Sensor response:
[40] [03] [08] [00][40] [00][05] [00][01] [7C][4F] [79][DA]

[40] = Modbus slave address, decimal equivalent = 64
[03] = Modbus function
[08] = Number of bytes returned by the sensor. 8 bytes transmitted by the sensor
[00][40] = Register 0; Modbus address
[00][05] = Register 1; Serial settings, 19200 baud, 8 data bits, even parity bit, 1 stop bit
[00][01] = Register 2; Temperature compensated signal, Most Significant Word (MSW). Decimal equivalent = 1
[7C][4F] = Register 3; Temperature compensated signal, Least Significant Word (LSW) = Decimal equivalent = 31823
[79][DA] = CRC, the checksum of the transmitted data

Together, register 2 and 3 are representing the temperature compensated solar radiation output measured by the SR05-D1A3. The MSW is in register 2 and the LSW in 3. The output has to be calculated by the formula: $((MSW \times 2^{16}) + LSW)/100$. In this example the result is: $((2^{16} \times 1) + 31823)/100 = 973.59$ W/m²

Request for body temperature, register 6:

Master Request:
[40][03][00][06][00][01][6B][1A]

[40] = Modbus Slave address
[03] = Modbus function
[00][06] = Start register
[00][01] = Number of registers
[6B][1A] = CRC

Sensor response:
[40][03][02][08][B1][43][FF]

[40] = Modbus Slave address
[03] = Modbus function
[02] = Number of bytes
[08][B1] = Content of register 7, decimal equivalent = 2225
[43][FF] = CRC

Temperature = Register 7 x 0.01 = 2225 x 0.01 = 22.25 °C

Register 6 represents the sensors body temperature. The received data needs to be divided by 100 to represent the correct outcome. In this example the result is: 2225 x 0.01 = 22.25 °C

Request for serial number, register 40:

Master Request:
[40][03][00][28][00][01][0B][13]

[40] = Modbus slave address
[03] = Modbus function
[00][28] = Start register
[00][01] = Number of registers
[0B][13] = CRC

Sensor response:
[40][03][02][0A][29][43][35]

[40] = Modbus Slave address
[03] = Modbus function
[02] = Number of bytes
[0A][29] = Content of register 40, decimal equivalent = 2601
[43][35] = CRC

Register 40 represents the sensors serial number. In this example the serial number is 2601.

7 Making a dependable measurement

7.1 The concept of dependability

A measurement with a pyranometer is called "dependable" if it is reliable, i.e. measuring within required uncertainty limits, for most of the time and if problems, once they occur, can be solved quickly.

The requirements for a measurement with a pyranometer may be expressed by the user as:

- required uncertainty of the measurement (see following paragraphs)
- requirements for maintenance and repairs (possibilities for maintenance and repair including effort to be made and processing time)
- a requirement to the expected instrument lifetime (until it is no longer feasible to repair)

It is important to realise that the uncertainty of the measurement is not only determined by the instrument but also by the way it is used.

See also ISO 9060 note 5. In case of pyranometers, the measurement uncertainty as obtained during outdoor measurements is a function of:

- the instrument class
- the calibration procedure / uncertainty
- the duration of instrument employment under natural sunlight (involving the instrument stability specification)
- the measurement conditions (such as tilting, ventilation, shading, instrument temperature)
- maintenance (mainly fouling)
- the environmental conditions*

Therefore, ISO 9060 says, "statements about the overall measurement uncertainty under outdoor conditions can only be made on an individual basis, taking all these factors into account".

* defined at Hukseflux as all factors outside the instrument that are relevant to the measurement such as the cloud cover (presence or absence of direct radiation), sun position, the local horizon (which may be obstructed) or condition of the ground (when tilted). The environmental conditions also involve the question whether or not the measurement at the location of measurement is representative of the quantity that should be measured.

7.2 Reliability of the measurement

A measurement is reliable if it measures within required uncertainty limits for most of the time. We distinguish between two causes of unreliability of the measurement:

- related to the reliability of the pyranometer and its design, manufacturing, calibration (hardware reliability).
- related to the reliability of the measurement uncertainty (measurement reliability), which involves hardware reliability as well as condition of use.

Most of the hardware reliability is the responsibility of the instrument manufacturer. The reliability of the measurement however is a joint responsibility of instrument manufacturer and user. As a function of user requirements, taking into account measurement conditions and environmental conditions, the user will select an instrument of a certain class, and define maintenance support procedures.

In many situations there is a limit to a realistically attainable accuracy level. This is due to conditions that are beyond control once the measurement system is in place. Typical limiting conditions are:

- the measurement conditions, for instance when working at extreme temperatures when the instrument temperature is at the extreme limits of the rated temperature range.
- the environmental conditions, for instance when installed at a sub-optimal measurement location with obstacles in the path of the sun.
- other environmental conditions, for instance when assessing PV system performance and the system contains panels at different tilt angles, the pyranometer measurement may not be representative of irradiance received by the entire PV system.

The measurement reliability can be improved by maintenance support. Important aspects are:

- dome fouling by deposition of dust, dew, rain or snow. Fouling results in undefined measurement uncertainty (sensitivity and directional error are no longer defined). This should be solved by regular inspection and cleaning.
- sensor instability. Maximum expected sensor aging is specified per instrument as its non-stability in [% change / year]. In case the sensor is not recalibrated, the uncertainty of the sensitivity gradually will increase. This is solved by regular recalibration.
- moisture condensing under pyranometer domes resulting in a slow change of sensitivity (within specifications). This is solved by regular replacement of desiccant or by maintenance (drying the entire sensor) in case the sensor allows this. For non-serviceable sensors like most second class pyranometers, this may slowly develop into a defect. For first class and secondary standard models (for instance model SR11 first class pyranometer and SR20-D2 digital secondary standard pyranometer) extra desiccant (in a set of 5 bags in an air tight bag) is available.

Another way to improve measurement reliability is to introduce redundant sensors.

- the use of redundant instruments allows remote checks of one instrument using the other as a reference, which leads to a higher measurement reliability.
- in PV system performance monitoring, in addition to instruments measuring in the plane of array, horizontally placed instruments are used for the measurement of global radiation. Global irradiance data enable the user to compare the local climate and system efficiency between different sites. These data can also be compared to measurements by local meteorological stations.

7.3 Speed of repair and maintenance

Dependability is not only a matter of reliability but also involves the reaction to problems; if the processing time of service and repairs is short, this contributes to the dependability.

Hukseflux pyranometers are designed to allow easy maintenance and repair. The main maintenance actions are:

- replacement of desiccant
- replacement of cabling

For optimisation of dependability a user should:

- design a schedule of regular maintenance
- design a schedule of repair or replacement in case of defects

When operating multiple instruments in a network Hukseflux recommends keeping procedures simple and having a few spare instruments to act as replacements during service, recalibrations and repair.

7.4 Uncertainty evaluation

The uncertainty of a measurement under outdoor or indoor conditions depends on many factors, see paragraph 1 of this chapter. It is not possible to give one figure for pyranometer measurement uncertainty. The work on uncertainty evaluation is "in progress". There are several groups around the world participating in standardisation of the method of calculation. The effort aims to work according to the guidelines for uncertainty evaluation (according to the "Guide to Expression of Uncertainty in Measurement" or GUM).

7.4.1 Evaluation of measurement uncertainty under outdoor conditions

Hukseflux actively participates in the discussions about pyranometer measurement uncertainty; we also provide spreadsheets, reflecting the latest state of the art, to assist our users in making their own evaluation. The input to the assessment is summarised:

1) The formal evaluation of uncertainty should be performed in accordance with ISO 98-3 Guide to the Expression of Uncertainty in Measurement, GUM.
2) The specifications of the instrument according to the list of ISO 9060 classification of pyranometers and pyrheliometers are entered as limiting values of possible errors, to be analysed as type B evaluation of standard uncertainty per paragraph 4.3.7. of GUM. A priori distributions are chosen as rectangular.
3) A separate estimate has to be entered to allow for estimated uncertainty due to the instrument maintenance level.
4) The calibration uncertainty has to be entered. Please note that Hukseflux calibration uncertainties are lower than those of alternative equipment. These uncertainties are entered in measurement equation (equation is usually Formula 0.1: E = U/S), either as an uncertainty in E (zero offsets, directional response) in U (voltage readout errors) or in S (tilt error, temperature dependence, calibration uncertainty).
5) In uncertainty analysis for pyranometers, the location and date of interest is entered. The course of the sun is then calculated, and the direct and diffuse components are estimated, based on a model; the angle of incidence of direct radiation is a major factor in the uncertainty.
6) In uncertainty analysis for modern pyrheliometers: tilt dependence often is so low that one single typical observation may be sufficient.
7) In case of special measurement conditions, typical specification values are chosen. These should for instance account for the measurement conditions (shaded / unshaded, ventilated/ unventilated, horizontal / tilted) and environmental conditions (clear sky / cloudy, working temperature range).
8) Among the various sources of uncertainty, some are “correlated”; i.e. present during the entire measurement process, and not cancelling or converging to zero when averaged over time; the off-diagonal elements of the covariance matrix are not zero. Paragraph 5.2 of GUM.
9) Among the various sources of uncertainty, some are “uncorrelated”; cancelling or converging to zero when averaged over time; the off-diagonal elements of the covariance matrix are zero. Paragraph 5.1 of GUM.
10) Among the various sources of uncertainty, some are “not included in analysis”; this applies for instance to non-linearity for pyranometers, because it is already included in the directional error, and the spectral response for pyranometers and pyrheliometers because it is already taken into account in the calibration process.

Table 7.4.1.1 *Preliminary estimates of achievable uncertainties of measurements with Hukseflux pyranometers. The estimates are based on typical pyranometer properties and calibration uncertainty, for sunny, clear sky days and well maintained stations, without uncertainty loss due to lack of maintenance and due to instrument fouling. The table specifies expanded uncertainties with a coverage factor of 2 and confidence level of 95 %. Estimates are based on 1 s sampling. IMPORTANT NOTE: there is no international consensus on uncertainty evaluation of pyranometer measurements, so this table should not be used as a formal reference.*

Pyranometer class (ISO 9060)	season	latitude	uncertainty minute totals at solar noon	uncertainty hourly totals at solar noon	uncertainty daily totals
secondary standard	summer	mid-latitude	2.7 %	2.0 %	1.9 %
		equator	2.6 %	1.9 %	1.7 %
		pole	7.9 %	5.6 %	4.5 %
	winter	mid-latitude	3.4 %	2.5 %	2.7 %
first class	summer	mid-latitude	4.7 %	3.3 %	3.4 %
		equator	4.4 %	3.1 %	2.9 %
		pole	16.1%	11.4 %	9.2 %
	winter	mid-latitude	6.5 %	4.5 %	5.2 %
second class (SR05 series)	summer	mid-latitude	8.4 %	5.9 %	6.2 %
		equator	7.8 %	5.5 %	5.3 %
		pole	29.5 %	21.6 %	18.0 %
	winter	mid-latitude	11.4 %	8.1 %	9.9 %

7.4.2 Calibration uncertainty

New calibration procedures were developed in close cooperation with PMOD World Radiation Center in Davos, Switzerland. The latest calibration method results in an uncertainty of the sensitivity of less than 2.4 %, compared to typical uncertainties of higher than 3.5 % for this pyranometer class. See the appendix for detailed information on calibration hierarchy.

8 Maintenance and trouble shooting

8.1 Recommended maintenance and quality assurance

SR05 can measure reliably at a low level of maintenance in most locations. Usually unreliable measurements will be detected as unreasonably large or small measured values. As a general rule this means that regular visual inspection combined with a critical review of the measured data, preferably checking against other measurements, is the preferred way to obtain a reliable measurement.

Table 8.1.1 *Recommended maintenance of SR05. If possible the data analysis and cleaning (1 and 2) should be done on a daily basis. (continued on next page)*

MINIMUM RECOMMENDED PYRANOMETER MAINTENANCE			
	INTERVAL	SUBJECT	ACTION
1	1 week	data analysis	compare measured data to maximum possible / maximum expected irradiance and to other measurements nearby (redundant instruments). Also historical seasonal records can be used as a source for expected values. Analyse night time signals. These signals may be negative (down to - 5 W/m^2 on clear windless nights), due to zero offset a. In case of use with PV systems, compare daytime measurements to PV system output. Look for any patterns and events that deviate from what is normal or expected
2	2 weeks	cleaning	use a soft cloth to clean the dome of the instrument, persistent stains can be treated with soapy water or alcohol
3	6 months	inspection	inspect cable quality, inspect connectors, inspect mounting position, inspect cable, clean instrument, clean cable, inspect levelling, change instrument tilt in case this is out of specification, inspect mounting connection, inspect interior of dome for condensation
4	2 years	desiccant replacement	desiccant is specified to last for minimum 2 years. In case the user wants to replace desiccant himself, this is at own risk and should only be executed in an ESD-safe work environment. The bottom plate of SR05 should be removed by unscrewing 3 x T10 screws with a Torx 10 screwdriver. The desiccant bag is taped on the bottom plate of SR05. Care should be taken when mounting the bottom plate on SR05
5	2 years	recalibration	recalibration by side-by-side comparison to a higher standard instrument in the field according to ISO 9847 request "power user" status and a password at the factory permitting to write to registers holding the sensitivity and the calibration history data via the Sensor Manager
6		lifetime assessment	judge if the instrument should be reliable for another 2 years, or if it should be replaced

MINIMUM RECOMMENDED PYRANOMETER MAINTENANCE (continued)			
7	6 years	parts replacement	if applicable / necessary replace the parts that are most exposed to weathering; cable, connector. NOTE: use Hukseflux approved parts only
8		internal inspection	if applicable: open instrument and inspect / replace O-rings; dry internal cavity around the circuit board
9		recalibration	high-accuracy recalibration indoors according to ISO 9847 or outdoors according to ISO 9846

8.2 Trouble shooting

Table 8.2.1 *Trouble shooting for SR05 (continued on next page)*

General	Inspect the instrument for any damage. Inspect if the connector is properly attached. Check the condition of the connectors (on chassis as well as the cable). Inspect if the sensor receives DC voltage power in the range of 5 to 30 VDC. Inspect the connection of the shield (typically not connected at the network side). Inspect the connection of the sensor power supply, typically the negative is connected to the network *common*.
Prepare for indoor testing	Install the Sensor Manager software on a PC. Equip the PC with RS-485 or TTL communication for respectively SR05-D1A3 and SR05-D2A2. Put DC voltage power to the sensor and establish communication with the sensor. At power–up the signal may have a temporary output level different from zero; an offset. Let this offset settle down.
The sensor does not give any signal	Check if the sensor reacts to light: expose the sensor to a strong light source, for instance a 100 W light bulb at 0.1 m distance. The signal should read > 100 W/m^2 now. Darken the sensor either by putting something over it or switching off the light. The instrument voltage output should go down and within one minute approach 0 W/m^2. Check the data acquisition by replacing the sensor with a spare sensor with the same address.
Not able to communicate with the sensor	Check all physical connections to the sensor and try connecting to the sensor again. If communicating is not possible, try to figure out if the address and communication settings are correct. Analyse the cable performance by measuring resistance from pins to cable ends. The electrical resistance should be < 10 Ω. In case of doubt, try a new cable. Connect sensor to a PC and perform the "Find" and "Find all" operation with the Sensor Manager to locate the sensor and verify the communication settings. If all physical connections are correct, and the sensor still cannot be found, please contact the factory to send the sensor to the manufacturer for diagnosis and service.
SR05 does not respond to a request for 6 or more registers	It is not possible to request more than five 16 bit registers in one request. In case of requesting six or more registers in just one request, the sensor will not respond. If requesting six or more registers, use multiple requests: the sensor will respond as expected.
The sensor signal is	Note that night-time signals may be negative (down to -5 W/m^2 on clear windless nights), due to zero offset a.

unrealistically high or low	Check if the pyranometer has a clean dome. Check the location of the pyranometer; are there any obstructions that could explain the measurement result. Check the orientation / levelling of the pyranometer. Check the cable condition looking for cable breaks. Check the condition of the connectors (on chassis as well as the cable).
The sensor signal shows unexpected variations	Check the presence of strong sources of electromagnetic radiation (radar, radio). Check the condition and connection of the shield. Check the condition of the sensor cable. Check if the cable is not moving during the measurement. Check the condition of the connectors (on chassis as well as the cable)
The dome shows internal condensation	Arrange to send the sensor back to Hukseflux for diagnosis.

8.3 Calibration and checks in the field

Recalibration of field pyranometers is typically done by comparison in the field to a reference pyranometer. The applicable standard is ISO 9847 "International Standard-Solar Energy- calibration of field pyranometers by comparison to a reference pyranometer". At Hukseflux an indoor calibration according to the same standard is used.

Hukseflux recommendation for re-calibration:
if possible, perform calibration indoor by comparison to an identical reference instrument, under normal incidence conditions.

The recommended calibration interval of pyranometers is 2 years. The registers containing the applied sensitivity and the calibration history of SR05 are accessible for users. This allows the user to choose his own local calibration service. The same feature may be used for remotely controlled re-calibration of pyranometers in the field. Ask Hukseflux for information on ISO and ASTM standardised procedures for field calibration. Request "power user" status and a password at the factory permitting to write to registers holding the sensitivity and the calibration history data via the Sensor Manager.

In case of field comparison; ISO recommends field calibration to a higher class pyranometer. Hukseflux suggests also allowing use of sensors of the same model and class, because intercomparisons of similar instruments have the advantage that they suffer from the same offsets. It is therefore just as good to compare to pyranometers of the same brand and type as to compare to an instrument of a higher class. ISO recommends to perform field calibration during several days; 2 to 3 days under cloudless conditions, 10 days under cloudy conditions. In general this is not achievable. In order to shorten the calibration process Hukseflux suggests to allow calibration at normal incidence, using hourly totals near solar noon.

Hukseflux main recommendations for field intercomparisons are:

1) to take normal incidence as a reference and not the entire day.
2) to take a reference of the same brand and type as the field pyranometer or a pyranometer of a higher class, and
3) to connect both to the same electronics, so that electronics errors (also offsets) are eliminated.
4) to mount all instruments on the same platform, so that they have the same body temperature.
5) assuming that the electronics are independently calibrated, to analyse radiation values at normal incidence radiation (possibly tilting the radiometers to approximately normal incidence), if this is not possible to compare 1 hour totals around solar noon for horizontally mounted instruments.
6) for second class radiometers, to correct deviations of more than ± 10 %. Lower deviations should be interpreted as acceptable and should not lead to a revised sensitivity.
7) for first class pyranometers, to correct deviations of more than ± 5 %. Lower deviations should be interpreted as acceptable and should not lead to a revised sensitivity.
8) for secondary standard instruments, to correct deviations of more than ± 3 %. Lower deviations should be interpreted as acceptable and should not lead to a revised sensitivity.

8.4 Data quality assurance

Quality assurance can be done by:

- analysing trends in solar irradiance signal
- plotting the measured irradiance against mathematically generated expected values
- comparing irradiance measurements between sites
- analysis of night time signals

The main idea is that one should look out for any unrealistic values. There are programs on the market that can semi-automatically perform data screening. See for more information on such a program: www.dqms.com.

9 Appendices

9.1 Appendix on cable extension / replacement

The sensor cable of the SR05 series is equipped with a M12-A straight connector. In case of cable replacement, it is recommended to purchase a new cable with connector at Hukseflux. In case of cable extension, it is recommended to purchase an extension cable with connector pairs at Hukseflux. Please note that Hukseflux does not provide support for Do-It-Yourself connector and cable assembly.

SR05 is equipped with one cable. Maximum length of the sensor cable is recommended to be 40 metres. It is good practice to keep the length of the cable as short as possible to avoid inference of the signal and keep noise at acceptable levels.

Do not use SR05's original factory-made cables with a total length of more than 40 metres.

Connector and cable specifications are summarised on the next page.



Figure 9.1.1 *On the left the SR05 cable with M12-A female connector on sensor end. The cable is non-stripped on the other end. Its length is 3 metres standard and available in 10 and 20 metres too. On the right Hukseflux extension cable with connector pairs, with male and female M12-A connectors, available in 10 and 20 metres.*

Table 9.1.1 *Specifications for SR05 cable replacement and extension*

General replacement	please order a new cable with connector at Hukseflux
General cable extension	please order an extension cable with connector pairs at Hukseflux
Connectors used	chassis: M12-A straight male connector, male thread, 5-pole manufacturer: Binder cable: M12-A straight female connector, female thread, 5-pole manufacturer: Binder The shield is electrically connected to the connector housing
Cable	5-wire, shielded manufacturer: Binder
Length	cables should be kept as short as possible; total cable length should be less than 40 m
Outer sheath	with specifications for outdoor use (for good stability in outdoor applications)

9.2 Appendix on tools for SR05

Table 9.2.1 *Specifications of tools for SR05*

CONFIGURATION	TOOLS	INCLUDED
tooling required for mounting SR05 without ball levelling	two M5 bolts applicable screwdriver	no no
tooling required for mounting SR05 with ball levelling	hex key 4 mm wrench size 8 mm for M5 nuts	yes no
tooling required for mounting SR05 with tube mount	hex key 4 mm	yes
tooling required for levelling SR05 with ball levelling and tube mount	hex key 4 mm	yes
tooling required for tipping the aluminium shim out of SR05's bottom panel position	screwdriver blade width 2 to 4 mm	no

9.3 Appendix on spare parts for SR05

- SR05 cable with female M12-A connector on sensor end, non-stripped on other end (3, 10, 20 m). Specify cable length
- SR05 extension cable with connector pair, with male and female M12-A connectors, (10, 20 m). Specify extension cable length
- Ball levelling (order number BL01)
- Tube mount (order number TM01)
- Tube mount with ball levelling (order number TMBL01)
- Shim for ball levelling mount
- Countersunk set screw for ball levelling mount
- 2 x M5x40 mounting bolts
- 2 x M5x30 mounting bolts
- 2 x M5x20 mounting bolts with 2 x M5 nuts
- Desiccant (silica gel, 1.0 g, in a HDPE bag)

NOTE: Dome, level and sensor of SR05 cannot be supplied as spare parts

9.4 Appendix on standards for classification and calibration

Both ISO and ASTM have standards on instrument classification and methods of calibration. The World Meteorological Organisation (WMO) has largely adopted the ISO classification system.

Table 9.4.1 *Pyranometer standardisation in ISO and ASTM.*

STANDARDS ON INSTRUMENT CLASSIFICATION AND CALIBRATION	
ISO STANDARD	EQUIVALENT ASTM STANDARD
ISO 9060:1990 Solar energy -- Specification and classification of instruments for measuring hemispherical solar and direct solar radiation	not available Comment: work is in progress on a new ASTM equivalent standard
Comment: a standard "Solar energy --Methods for testing pyranometer and pyrheliometer characteristics" has been announced in ISO 9060 but is not yet implemented.	not available
ISO 9846:1993 Solar energy -- Calibration of a pyranometer using a pyrheliometer	ASTM G167 - 05 Standard Test Method for Calibration of a Pyranometer Using a Pyrheliometer
ISO 9847:1992 Solar energy -- Calibration of field pyranometers by comparison to a reference pyranometer	ASTM E 824 -10 Standard Test Method for Transfer of Calibration from Reference to Field Radiometers ASTM G207 - 11 Standard Test Method for Indoor Transfer of Calibration from Reference to Field Pyranometers
ISO 9059:1990 Solar energy -- Calibration of field pyrheliometers by comparison to a reference pyrheliometer	ASTM E 816 Standard Test Method for Calibration of Pyrheliometers by Comparison to Reference Pyrheliometers

9.5 Appendix on calibration hierarchy

The World Radiometric Reference (WRR) is the measurement standard representing the SI unit of irradiance. Use of WRR is mandatory when working according to the standards of both WMO and ISO. ISO9874 states under paragraph 1.3: the methods of calibration specified are traceable to the WRR. The WMO manual states under paragraph 7.1.2.2: the WRR is accepted as representing the physical units of total irradiance.

The worldwide homogeneity of the meteorological radiation measurements is guaranteed by the World Radiation Center in Davos Switzerland, by maintaining the World Standard Group (WSG) which materialises the World Radiometric Reference.

See www.pmodwrc.ch

The Hukseflux standard is traceable to an outdoor WRR calibration. Some small corrections are made to transfer this calibration to the Hukseflux standard conditions: sun at zenith and 1000 W/m^2 irradiance level. During the outdoor calibration the sun is typically at 20 to 40° zenith angle, and the total irradiance at a 700 W/m^2 level.

Table 9.5.1 *Calibration hierarchy for pyranometers*

WORKING STANDARD CALIBRATION AT PMOD / WRC DAVOS
Calibration of working standard pyranometers: Method: ISO 9846, type 1 outdoor. This working standard has an uncertainty "uncertainty of standard". The working standard has been calibrated under certain "test conditions of the standard". The working standard has traceability to WRR world radiometric reference.
CORRECTION OF (WORKING) STANDARD CALIBRATION TO STANDARDISED REFERENCE CONDITIONS
Correction from "test conditions of the standard" to "reference conditions" i.e. to normal incidence and 20 °C: Using known (working) standard pyranometer properties: directional, non linearity, offsets, temperature dependence). This correction has an uncertainty; "uncertainty of correction". At Hukseflux we also call the working standard pyranometer "standard".
INDOOR PRODUCT CALIBRATION
Calibration of products, i.e. pyranometers: Method: according to ISO 9847, Type IIc, which is an indoor calibration. This calibration has an uncertainty associated with the method. (In some cases like the BSRN network the product calibration is with a different method; for example again type 1 outdoor)
CALIBRATION UNCERTAINTY CALCULATION
ISO 98-3 Guide to the Expression of Uncertainty in Measurement, GUM Determination of combined expanded uncertainty of calibration of the product, including uncertainty of the working standard, uncertainty of correction, uncertainty of the method (transfer error). The coverage factor must be determined; at Hukseflux we work with a coverage factor k = 2.

9.6 Appendix on meteorological radiation quantities

A pyranometer measures irradiance. The time integrated total is called radiant exposure. In solar energy radiant exposure is often given in $W \cdot h/m^2$.

Table 9.6.1 *Meteorological radiation quantities as recommended by WMO (additional symbols by Hukseflux Thermal Sensor). POA stands for Plane of Array irradiance. The term originates from ASTM and IEC standards.*

SYMBOL	DESCRIPTION	CALCULATION	UNITS	ALTERNATIVE EXPRESSION	
$E\downarrow$	downward irradiance	$E\downarrow = E_g\downarrow + E_l\downarrow$	W/m^2		
$H\downarrow$	downward radiant exposure for a specified time interval	$H\downarrow = H_g\downarrow + H_l\downarrow$	J/m^2		
$E\uparrow$	upward irradiance	$E\uparrow = E_g\uparrow + E_l\uparrow$	W/m^2		
$H\uparrow$	upward radiant exposure for a specified time interval	$H\uparrow = H_g\uparrow + H_l\uparrow$	J/m^2	$W \cdot h/m^2$	Change of units
E	direct solar irradiance normal to the apparent solar zenith angle		W/m^2	DNI	Direct Normal Irradiance
E_0	solar constant		W/m^2		
$E_{g\downarrow h}$	global irradiance; hemispherical irradiance on a specified, in this case horizontal surface.*	$E_g\downarrow = E\cos\theta_h + E_d\downarrow$	W/m^2	GHI	Global Horizontal Irradiance
$E_{g\downarrow t}$	global irradiance; hemispherical irradiance on a specified, in this case tilted surface.*	$E_{g\downarrow t} = E\cdot\cos\theta_t + E_{d\downarrow t} + E_{r\uparrow t}$ ***	W/m^2	POA	Plane of Array
$E_d\downarrow$	downward diffuse solar radiation		W/m^2	DHI	Diffuse Horizontal Irradiance
$E_l\uparrow$, $E_l\downarrow$	upward / downward long-wave irradiance		W/m^2		
$E_r\uparrow$	reflected solar irradiance		W/m^2		
E^*	net irradiance	$E^* = E\downarrow - E\uparrow$	W/m^2		
$T\downarrow$	apparent surface temperature**		ºC or K		
$T\uparrow$	apparent sky temperature**		ºC or K		
SD	sunshine duration		h		

θ is the apparent solar zenith angle θ_h relative to horizontal, θ_t relative to a tilted surface
g = global, l = long wave, t = tilted *, h = horizontal*
* distinction horizontal and tilted from Hukseflux,
** T symbols introduced by Hukseflux,
*** contributions of $E_{d\downarrow t}$ and $E_{r\uparrow t}$ are $E_d\downarrow$ and $E_r\uparrow$ both corrected for the tilt angle of the surface

9.7 Appendix on ISO and WMO classification tables

Table 9.7.1 *Classification table for pyranometers per ISO 9060 and WMO. NOTE: WMO specification of spectral selectivity is different from that of ISO. Hukseflux conforms to the ISO limits. WMO also specifies expected accuracies. ISO finds this not to be a part of the classification system because it also involves calibration. Please note that WMO achievable accuracies are for clear days at mid latitudes and that the uncertainty estimate does not include uncertainty due to calibration*.*

ISO CLASSIFICATION TABLE**			
ISO CLASS	SECONDARY STANDARD	FIRST CLASS	SECOND CLASS
Specification limit			
Response time (95 %)	15 s	30 s	60 s
Zero offset a (response to 200 W/m^2 net thermal radiation)	+ 7 W/m^2	+ 15 W/m^2	+ 30 W/m^2
Zero offset b (response to 5 K/h in ambient temperature)	± 2 W/m^2	± 4 W/m^2	± 8 W/m^2
Non-stability (change per year)	± 0.8 %	± 1.5 %	± 3 %
Non-linearity (100 to 1000 W/m^2)	± 0.5 %	± 1 %	± 3 %
Directional response	± 10 W/m^2	± 20 W/m^2	± 30 W/m^2
Spectral selectivity (350 to 1 500 x 10^{-9} m) (WMO 300 to 3 000 x 10^{-9} m)	± 3 %	± 5 %	± 10 %
Temperature response (interval of 50 K)**	2 %	4 %	8 %
Tilt response (0 to 90 ° at 1000 W/m^2)	± 0.5 %	± 2 %	± 5 %
ADDITIONAL WMO SPECIFICATIONS			
WMO CLASS	HIGH QUALITY	GOOD QUALITY	MODERATE QUALITY
WMO: achievable accuracy for daily sums*	2 %	5 %	10 %
WMO: achievable accuracy for hourly sums*	3 %	8 %	20 %
WMO: achievable accuracy for minute sums*	not specified	not specified	not specified
WMO: resolution (smallest detectable change)	1 W/m^2	5 W/m^2	10 W/m^2
CONFORMITY TESTING***			
ISO 9060	individual instrument only: all specs must comply	group compliance	group compliance

* WMO 7.2.1: The estimated uncertainties are based on the following assumptions: (a) instruments are well-maintained, correctly aligned and clean; (b) 1 min and 1 h figures are for clear-sky irradiances at solar noon; (c) daily exposure values are for clear days at mid-latitudes. WMO 7.3.2.5: Table 7.5 lists the expected maximum deviation from the true value, excluding calibration errors.
** At Hukseflux the expression ± 1 % is used instead of a range of 2 %.
*** an instrument is subject to conformity testing of its specifications. Depending on the classification, conformity compliance can be proven either by group- or individual compliance. A specification is fulfilled if the mean value of the respective test result does not exceed the corresponding limiting value of the specification for the specific category of instrument.

9.8 Appendix on definition of pyranometer specifications

Table 9.8.1 *Definition of pyranometer specifications*

SPECIFICATION	DEFINITION	SOURCE
Response time (95 %)	time for 95 % response. The time interval between the instant when a stimulus is subjected to a specified abrupt change and the instant when the response reaches and remains within specified limits around its final steady value.The response time is a measure of the thermal inertia inherent in the stabilization period for a final reading.	ISO 9060-1990 WMO 1.6.3
Zero offset a: (200 W/m^2 net thermal radiation)	response to 200 W/m^2 net thermal radiation (ventilated). Hukseflux assumes that unventilated instruments have to specify the zero-offset in unventilated – worst case – conditions. Zero offsets are a measure of the stability of the zero-point. Zero offset a is visible at night as a negative offset, the instrument dome irradiates in the far infra red to the relatively cold sky. This causes the dome to cool down. The pyranometer sensor irradiates to the relatively cool dome, causing a negative offset. Zero offset a is also assumed to be present during daytime.	ISO 9060-1990
Zero offset b: (5 K/h in ambient temperature)	response to 5 K/h change in ambient temperature. Zero offsets are a measure of the stability of the zero-point.	ISO 9060-1990
Non-stability (change per year)	percentage change in sensitivity per year. The dependence of sensitivity resulting from ageing effects which is a measure of the long-term stability.	ISO 9060-1990
Non-linearity (100 to 1000 W/m^2)	percentage deviation from the sensitivity at 500 W/m^2 due to the change in irradiance within the range of 100 W/m^2 to 1000 W/m^2. Non-linearity has an overlap with directional response, and therefore should be handled with care in uncertainty evaluation.	ISO 9060-1990
Directional response	the range of errors caused by assuming that the normal incidence sensitivity is valid for all directions when measuring from any direction a beam radiation whose normal incidence irradiance is 1000 W/m^2 . Directional response is a measure of the deviations from the ideal "cosine behaviour" and its azimuthal variation.	ISO 9060-1990
Spectral selectivity (350 to 1500 x 10^{-9} m) (WMO 300 to 3000 x 10^{-9} m)	percentage deviation of the product of spectral absorptance and spectral transmittance from the corresponding mean within 350 x 10^{-9} m to 1500 x 10^{-9} m and the spectral distribution of irradiance. Spectral selectivity is a measure of the spectral selectivity of the sensitivity.	ISO 9060-1990
Temperature response (interval of 50 K)	percentage deviation of the sensitivity due to change in ambient temperature within an interval of 50 K the temperature of the pyranometer body.	ISO 9060-1990
Tilt response (0° to 90° at 1000 W/m^2)	percentage deviation from the sensitivity at 0° tilt (horizontal) due to change in tilt from 0° to 90° at 1000 W/m^2 irradiance. Tilt response describes changes of the sensitivity due to changes of the tilt angle of the receiving surface.	ISO 9060-1990
Sensitivity	the change in the response of a measuring instrument divided by the corresponding change in the stimulus.	WMO 1.6.3
Spectral range	the spectral range of radiation to which the instrument is sensitive. For a normal pyranometer this should be in the 0.3 to 3 x 10^{-6} m range. Some pyranometers with coloured glass domes have a limited spectral range.	Hukseflux

9.9 Appendix on terminology / glossary

Table 9.9.1 *Definitions and references of used terms*

TERM	DEFINITION (REFERENCE)
Solar energy or solar radiation	solar energy is the electromagnetic energy emitted by the sun. Solar energy is also called solar radiation and shortwave radiation. The solar radiation incident on the top of the terrestrial atmosphere is called extra-terrestrial solar radiation; 97 % of which is confined to the spectral range of 290 to 3 000 x 10^{-9} m. Part of the extra-terrestrial solar radiation penetrates the atmosphere and directly reaches the earth's surface, while part of it is scattered and / or absorbed by the gas molecules, aerosol particles, cloud droplets and cloud crystals in the atmosphere. The former is the direct component, the latter is the diffuse component of the solar radiation. (ref: WMO, Hukseflux)
Hemispherical solar radiation	solar radiation received by a plane surface from a 180° field of view angle (solid angle of 2 π sr).(ref: ISO 9060)
Global solar radiation	the solar radiation received from a 180° field of view angle on a horizontal surface is referred to as global radiation. Also called GHI. This includes radiation received directly from the solid angle of the sun's disc, as well as diffuse sky radiation that has been scattered in traversing the atmosphere. (ref: WMO) Hemispherical solar radiation received by a horizontal plane surface. (ref: ISO 9060)
Plane-of-array irradiance	also POA: hemispherical solar irradiance in the plane of a PV array. (ref: ASTM E2848-11 / IEC 61724)
Direct solar radiation	radiation received from a small solid angle centred on the sun's disc, on a given plane. (ref: ISO 9060)
Terrestrial or Longwave radiation	radiation not of solar origin but of terrestrial and atmospheric origin and having longer wavelengths (3 000 to 100 000 x 10^{-9} m). In case of downwelling $E_l \downarrow$ also the background radiation from the universe is involved, passing through the "atmospheric window". In case of upwelling $E_l \uparrow$, composed of long-wave electromagnetic energy emitted by the earth's surface and by the gases, aerosols and clouds of the atmosphere; it is also partly absorbed within the atmosphere. For a temperature of 300 K, 99.99 % of the power of the terrestrial radiation has a wavelength longer than 3 000 x 10^{-9} m and about 99 per cent longer than 5 000 x 10^{-9} m. For lower temperatures, the spectrum shifts to longer wavelengths. (ref: WMO)
World Radiometric Reference (WRR)	measurement standard representing the SI unit of irradiance with an uncertainty of less than ± 0.3 % (see the WMO Guide to Meteorological Instruments and Methods of Observation, 1983, subclause 9.1.3). The reference was adopted by the World Meteorological Organization (WMO) and has been in effect since 1 July 1980. (ref: ISO 9060)
Albedo	ratio of reflected and incoming solar radiation. Dimensionless number that varies between 0 and 1. Typical albedo values are: < 0.1 for water, from 0.1 for wet soils to 0.5 for dry sand, from 0.1 to 0.4 for vegetation, up to 0.9 for fresh snow.
Angle of incidence	angle of radiation relative to the sensor measured from normal incidence (varies from 0° to 90°).
Zenith angle	angle of incidence of radiation, relative to zenith. Equals angle of incidence for horizontally mounted instruments
Azimuth angle	angle of incidence of radiation, projected in the plane of the sensor surface. Varies from 0 ° to 360 °. 0 is by definition the cable exit direction, also called north, east is + 90 °. (ASTM G113-09)
Sunshine duration	sunshine duration during a given period is defined as the sum of that sub-period for which the direct solar irradiance exceeds 120 W/m^2. (ref: WMO)

9.10 Appendix on floating point format conversion

For efficient use of microcontroller capacity some registers in the SR05 contain data in a *float or floating point* format. In fact, a floating point is an approximation of a real number represented by a number of significant digits (*mantissa*) and an exponent. For implementation of the floating point numbers, Hukseflux follows the IEEE 754 standard. In this example the floating point of register 41 and 42 is converted to the decimal value it represents. In the Sensor Manager software and other Modbus tools, floating point data will be converted to decimal data automatically.

Example of the calculation of register 41 + 42 representing a floating point for the sensitivity of the sensor, which is 15.14:

Data in register 41, 16754 (MSW)
Data in register 42, 15729 (LSW)
Double word:
$(MSW \times 2^{16}) + LSW$ so: $(16754 \times 2^{16}) + 15729 = 1098005873$

According to IEEE 754:
Sign bit:
$1098005873 < 2147483647$ so: sign bit = 1;
The number 2147483647 is defined by IEEE 754

Exponent:
$1098005873 / 2^{23} = 130$ (digits after the decimal point are ignored)
$130 - 127 = 3$ so: exponent = 3;
The number 127 is a constant defined by IEEE 754

Mantissa:
$130 \times 2^{23} = 1090519040$
$1098005873 - 1090519040 = 7486833$
$7486833 / 2^{23} = 0.8925$
According to IEEE 754, 1 has to be added to get mantissa
$0.8925 + 1 = 1.8925$ so: mantissa = 1.8925

Calculation of floating point:
$float = sign\ bit \times mantissa \times (2^{exponent}) = 1 \times 1.8925 \times 2^3 = 15.14$
so: floating point = 15.14

9.11 Appendix on function codes, register and coil overview

Table 9.11.1 *Supported Modbus function codes*

SUPPORTED MODBUS FUNCTION CODES	
FUNCTION CODE (HEX)	**DESCRIPTION**
0x01	Read Coils
0x02	Read Discrete Inputs
0x03	Read Holding Registers
0x04	Read Input Register
0x05	Write Single Coil
0x06	Write Single Holding Register
0x0F	Write Multiple Coils
0x10	Write Multiple Registers



Your data request may need an offset of +1 for each SR05 register number, depending on processing by the network master. Example: SR05 register number 7 + master offset = 7 + 1 = master register number 8. Consult the manual of the device acting as the local master.

Table 9.11.2 *Modbus registers 0 to 82*

MODBUS REGISTERS 0 - 82				
REGISTER ADDRESS	**PARAMETER**	**DESCRIPTION OF CONTENT**	**TYPE OF**	**FORMAT OF DATA**
0	Modbus address	Sensor address in Modbus network, default = 1	R/W	U16
1	Serial communication settings	Sets the serial communication, default = 5	R/W	U16
2 + 3	Irradiance	signal in x 0.01 W/m²	R	S32
4 + 5	Factory use only			
6	Sensor body temperature	In x 0.01 ˚C	R	S16
7	Sensor electrical resistance	In x 0.1 Ω	R	U16
8	Scaling factor irradiance	Default = 100	R	U16
9	Scaling factor temperature	Default = 100	R	U16
10 + 11	Sensor voltage output	In x 10^{-9} V	R	S32
12 to 31	Factory use only			
32 to 35	Sensor model	Part one of sensor description	R	String

36 to 39	Sensor model	Part two of sensor description	R	String

MODBUS REGISTERS 0 – 82, continued				
REGISTER ADDRESS	**PARAMETER**	**DESCRIPTION OF CONTENT**	**TYPE OF**	**FORMAT OF DATA**
40	Sensor serial number		R	U16
41 + 42	Sensor sensitivity	In x 10^{-6} V/(W/m^2)	R	Float
43	Response time	In x 0.1 s	R	U16
44	Sensor resistance	In x 0.1 Ω	R	U16
45	Reserved	Always 0	R	U16
46 + 47	Sensor calibration date	Calibration date of the sensor in YYYYMMDD	R	U32
48 to 60	Factory use			
61	Firmware version		R	U16
62	Hardware version		R	U16
63 + 64	Sensor sensitivity history 1	In x 10^{-6} V/(W/m^2) Default value is 0	R	Float
65 + 66	Calibration date history 1	Former calibration date of the sensor in YYYYMMDD Default value is 0	R	U32
67 + 68	Sensor sensitivity history 2	See register 63 +64	R	Float
69 + 70	Calibration date history 2	See register 65 + 66	R	U32
71 + 72	Sensor sensitivity history 3	See register 63 + 64	R	Float
73 + 74	Calibration date history 3	See register 65 + 66	R	U32
75 + 76	Sensor sensitivity history 4	See register 63 + 64	R	Float
77 + 78	Calibration date history 4	See register 65 + 66	R	U32
79 + 80	Sensor sensitivity history 5	See register 63 + 64	R	Float
81 + 82	Calibration date history 5	See register 65 + 66	R	U32

Note 1: Up to five 16 bit registers can be requested in one request. If requesting six or more registers, use multiple requests.

Please note that if your data request needs an offset of +1 for each SR05 register number, depending on processing by the network master, this offset applies to coils as well. Consult the manual of the device acting as the local master.

Table 9.11.3 *Coils*

COILS				
COIL	**PARAMETER**	**DESCRIPTION**	**TYPE OF**	**OBJECT TYPE**
0	Restart	Restart the sensor	W	Single bit
1	Reserved			
2	Check	Measure sensor electrical resistance	W	Single bit

9.12 Appendix on finding the sensor model name in the register

Table 9.12.1 *Modbus registers 32 to 39, sensor model name*

MODBUS REGISTERS 32-62				
REGISTER ADDRESS	**PARAMETER**	**DESCRIPTION OF CONTENT**	**TYPE OF**	**FORMAT OF DATA**
32 to 35	Sensor model	Part one of sensor description	R	String
36 to 39	Sensor model	Part two of sensor description	R	String

Registers 32 to 39 will return 8 numbers which can be decoded to find the sensor model name. There are two methods: A and B. SR05-D1A3 sensors with serial number 3819 or higher and SR05-D2A2 sensors with serial number 3524 or higher use method A for storing the name in this register. Sensors with lower serial numbers than these (mostly SR05-DA1 and SR05-DA2 sensors) use method B.

Method A: The 8 numbers (16 bit word or two bytes) are translated to ASCII characters in the following manner. The least significant byte (LSB) of each number corresponds to the first ASCII character and the most significant byte (MSB) corresponds to the first ASCII character in this register location. The following table illustrates this encoding:

Table 9.12.1 Method A sensor model name encoding

REGISTER NUMBER	**32**	**33**	**34**	**35**	**36**	**37**	**38**	**39**
Hexadecimal	[52][53]	[35][30]	[44][2D]	[41][31]	[00][33]	[00][00]	[00][00]	[00][00]
MSB	[52]	[35]	[44]	[41]	[00]	[00]	[00]	[00]
LSB	[53]	[30]	[2D]	[31]	[33]	[00]	[00]	[00]
ASCII	SR	05	-D	1A	3			

Method B: The 8 numbers (16 bit word or two bytes) are translated to ASCII characters in the following manner. The least significant byte (LSB) corresponds to the only ASCII character in this register location. The most significant byte (MSB) always equals [00].

Table 9.12.2 Method B sensor model name encoding

REGISTER NUMBER	**32**	**33**	**34**	**35**	**36**	**37**	**38**	**39**
Hexadecimal	[00][53]	[00][52]	[00][30]	[00][35]	[00][2D]	[00][44]	[00][41]	[00][31]
MSB	[00]	[00]	[00]	[00]	[00]	[00]	[00]	[00]
LSB	[53]	[52]	[30]	[35]	[2D]	[44]	[41]	[31]
ASCII	S	R	0	5	-	D	A	1

Note that there is an alternative way to find out what encoding is used by reading register 32 (16 bit word or two bytes) and find the value of the most significant byte (MSB). If this value equals [00] encoding method B is used. If it does not equal [00] method A is used.

Hukseflux
Thermal Sensors

9.13 EU declaration of conformity

CE

We, Hukseflux Thermal Sensors B.V.
Delftechpark 31
2628 XJ Delft
The Netherlands

in accordance with the requirements of the following directives:

2011/65/EU	The Restriction of Hazardous Substances Directive
2014/30/EU	The Electromagnetic Compatibility Directive

hereby declare under our sole responsibility that:

Product models:	SR05-D1A3, SR05-D2A2
Product type:	Pyranometer

have been designed to comply and are in conformity with the relevant sections and applicable requirements of the following standards:

Emission:	IEC/EN 61000-6-1, Class B, RF emission requirements, IEC CISPR11 and EN 55011 Class B requirements
Immunity:	IEC/EN 61000-6-2 and IEC 61326 requirements
Report:	"EMC test SR05-D1A3_d v03012019.pdf", 03 January, 2019 and "EMC test SR05-DA2 v04122015.pdf", 04 December, 2015



Eric HOEKSEMA
Director
Delft
07 December, 2015

© 2023, Hukseflux Thermal Sensors B.V.
www.hukseflux.com

Hukseflux Thermal Sensors B.V. reserves the right to change specifications without notice.

IMT TECHNOLOGY

DATA SHEET

Sensors for Measuring PV Module Temperature

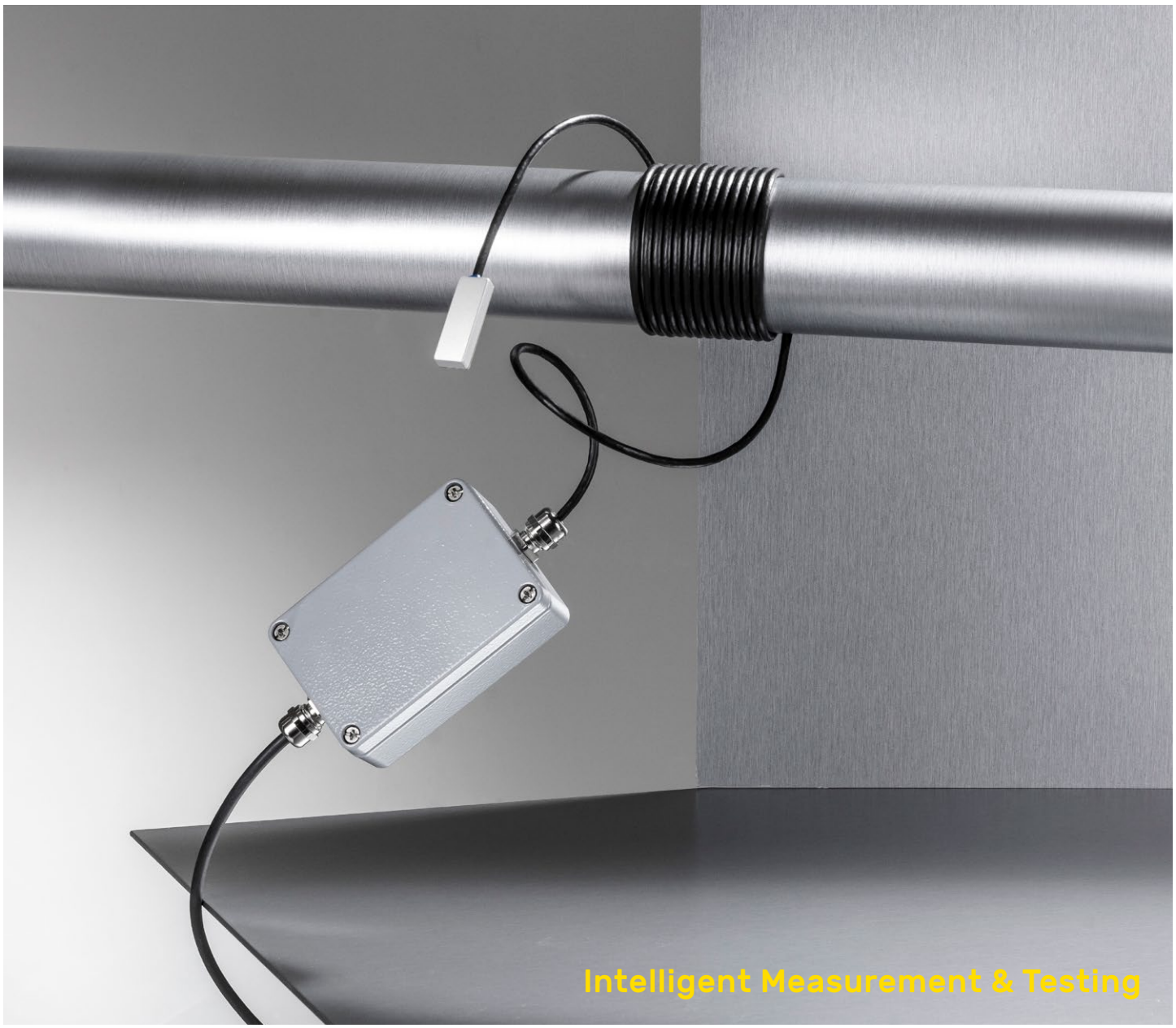

Precise Tracking of the Module Temperature on PV Systems

Measure the temperature of your PV module with utmost precision and minimal drift to assess your system's productivity. Our module temperature sensors are equipped with a sturdy aluminium housing and robust, weatherproof cabling. Thanks to the use of premium components, the sensors achieve high accuracy and are ideal for use in industrial environments and on-site usage (e.g. PV module temperature). The sensor element's compact design also makes it perfect for measuring temperature of bifacial modules.

Benefits & Features

- Sensors comply with all IEC 61724-1 requirements, including for bifacial modules
- Very small sensor element; covers less than 2 % in full size M6 or half-cut M12 cells
- Adhesive's thermal conductivity > 500/m²/K
- Pt1000 precision sensor element as per IEC 60751 Class A[1]
- Sensor element, including extremely adhesive tape for long-term usage
- Highly sturdy aluminium housing[1]
- High-precision measuring electronics including calibration certificate for all active models
- Developed and manufactured in Germany[1]

Sensor Types

Type	Output at -40 to +90 °C	Notes
Tm-RS485-MB	RS485 / MODBUS	–
Tm-I-4090	4 to 20 mA	–
Tm-V-4090	0 to 10 V	–
Tm-Pt1000	Pt1000	–
Tm-Pt1000-box	Pt1000	Including junction box with spring terminals
Tm-Pt100	Pt100	–

Technical Data

All Types (exept Tm-Pt100)

Sensor element	Pt1000 class A as per EN 60751
Sensor housing	Self-adhesive aluminum block, 35 mm x 12 mm x 6 mm
Sensor cable (Pt1000)	PUR sheath, shielded (LiYC11Y, 2 x 0.25 mm²), length: 3 m
Case material	Powder coated aluminium
Operating temperature	Sensor element: -40 to +90 °C, case: -40 to +80 °C
Degree of protection	IP67
Customs tariff number	90 25 19 00

→ For further technical information please see also the instruction manual.

Tm-Pt100

Sensor element	Pt100 class B as per EN 60751
Sensor housing	Self-adhesive silicone rubber Patch, 45 mm x 13 mm x 5 mm
Sensor cable (Pt100)	PTFE sheath, 4 x AWG 30, length: 2 m
Operating temperature	Sensor element: -40 to +90 °C
Customs tariff number	90 25 19 00

→ For further technical information please see also the instruction manual.

Active Temperature Sensors

	Tm-I-4090 **Tm-V-4090**	**Tm-RS485-MB**
		
Measurement uncertainty	1 K at -40 to +80 °C 0.7 K at max. 50 °C case temperature	1 K at -40 to +90 °C
Voltage supply	24 V_{DC} (12 to 28 V_{DC})	24 V_{DC} (10 to 28 V_{DC})
Galvanic insulation	–	1000 V
Connection cable	PUR sheath, shielded (LiYC11Y, 4 x 0.14 mm²)	
Cable length	3 m	6 m
Case size	64 mm x 58 mm x 34 mm	98 mm x 64 mm x 34 mm
Weight	350 g	500 g

Passive Temperature Sensors			
	Tm-Pt1000	**Tm-Pt1000-box**	**Tm-Pt100**
			
Measurement uncertainty	0.35 K at -40 to +90 °C		0.75 K at -40 to +90 °C
Electrical connection	Wires of sensor cable	Spring terminals	Wires of sensor cable
Case size	–	64 mm x 58 mm x 34 mm	–
Weight	70 g	240 g	35 g

Accessories

Junction box set	JB-01	Junction box with cable glands and spring terminals

→ See also data sheet of accessories for further technical information.

Scope of Delivery

All types	Instruction manual
	Calibration certificate (not for Tm-Pt1000, Tm-Pt1000-box, Tm-Pt100)

1 Tm-Pt100

IMT Technology GmbH
Schwarzer Weg 43A
31789 Hameln, Germany

T +49 5151 403699-0
F +49 5151 403699-19
E info@imt-technology.com

© IMT Technology GmbH
Date: June 2024
Errors and changes excepted

ANNEXES - DATASHEETS of the Schipluiden demo

PAR+ diffusive coating
Technical Data Sheet

Product description	PAR+ is a durable and sprayable coating that brings diffusivity inside your greenhouse year-round without losing grow light (PAR). Diffuse light penetrates deeper into the crop, resulting in more photosynthesis in the plant.	
Intended use	Intended for exterior greenhouse covers. It does not have to be removed at the end of the season due to its 8-year durability.	
Technical specifications	Hortiscatter	: 35 ± 10%
	Hemispherical transmission[1]	: 80 ± 1%
	Dry thickness	: 35 ± 10 µm
	Durability	: Guaranteed ≥ 5 years
	Chalk compatible	: Yes
	Cleanable	: Yes, resistant to common cleaning agents
	[1]On a 4-mm low-iron clear glass	
Effect on crops	The diffuse light results in a more even light and temperature distribution in the greenhouse, both horizontally and vertically. The improved distribution dampens the i) peak light intensities and ii) peak temperatures, and removes any shading that is created by the greenhouse structure. This allows the plant to use the available light more efficiently and delays the moment at which the plant reaches water stress due to the lower plant temperature under the coating.	
Surface preparation	This coating is suitable to be applied on a glass substrate. The glass surface should be clean, dry and free from contamination.	
Conditions during application	Outside temperature	: 8 – 20 ˚C
	Relative humidity	: 50 – 85 %
	Wind speed	: < 7.9 m/s
	Glass temperature	: 10 – 40 ˚C
	Predicted dry hours	: ≥ 18 hours

Application method	Application should be done by with a greenhouse spray machine (or “dekwasser”) by professional sprayers. The parameters in the Application Guide should be strictly followed to ensure the correct coating thickness and quality and thus the coating performance.	
Application guide	Spray nozzle	: Teejet XR11002VK – XR11006VK
	Pressure at nozzle	: 4 – 10 bars
	Coverage	: 1100 – 1300 L/ha (ground area)
	Personal protection	: Safety glasses and protective gloves
Monitoring and maintenance	After the application, you will receive a QC report from a “reference sample” which is prepared on the same day with the same formulation and drying condition. The QC report details the optical performance and durability tests FOTONIQ performs in-house. PAR sensors can be placed underneath the coating to ensure its performance. These measurements are compared to a reference area. This allows us to act fast if abnormalities occur. You will have access to all the data that is generated. Periodic check-in meetings are planned between FOTONIQ after-sales team and growers.	

This technical datasheet is based on existing knowledge of FOTONIQ. FOTONIQ cannot be held liable for any damages resulting from the use of this product or any damages beyond her control. The customer should check, using the means normally available to him, whether the products supplied are suitable for the planned application. Always consult our technical specialists via marcom@fotoniq.com for most up-to-date information. FOTONIQ’s General Terms & Conditions apply: https://www.fotoniq.com/general-terms-and-conditions.

General Project Instruction

For a successful PAR+ coating application, maintaining diffusivity for 8 years

BEFORE Spray

1. Fill in the customer survey.
2. Clean the gutters to avoid clogging, if needed.
3. Clean the glass with dekwasser or high-pressure water. If possible, use citric acid or Reduclean (for diffuse coating) too.

DURING Spray

1. Close the window where the coating is being applied. Preferably also the adjacent divisions to prevent wind draft from entering the greenhouse.
2. Open screen to warm up the glass, preferably for at least 1 hour before spray on cold days.
3. Close the valve into the basin. Keep it closed for preferably ≥ 1 week, or at least after big rain showers (≥ 40 mm rainfall in total).

AFTER Spray

1. Keep the window closed for as long as possible.
2. Observe the water condition in the basin, especially the pH value.
3. Open the valve (see above) after ≥ 1 week, or at least big rain showers (≥ 40 mm rainfall in total).
4. Clean the coated area according to instructions given (see below).
5. DO NOT use any glass cleaning agents, such as citric acid or oxalic acid, on the coating.
6. At any point, if you are unsure about the performance of the coating, you may send a (broken) coated glass to FOTONIQ for optical measurements or contact FOTONIQ (order@fotoniq.com) for an inspection.

Cleaning Instruction

With seasonal coating

1. Our coating is compatible with SprayChalk and Redusol. You can apply the seasonal coating maximally once per year, and remove it with the corresponding removal agent.
2. The seasonal coating may be removed by first applying Reduclean (for diffuse coating), then rinsing with a generous amount of high-pressure water. You may also use dekwasser and brushes. In any case, it's recommended to rinse with more water or run the dekwasser for an extra round to clean the residues fully.

Without seasonal coating

1. The coating can be cleaned with mild cleaning agents, such as Reduclean (for diffuse coating), or simply with water.
2. We have tested our coating for a maximum of 10 (ten) dekwasser brushing cycles per year. You may alternatively also use high pressure water to rinse the glass. If you intend to clean your roof more, please consult FOTONIQ prior doing so. It's recommended to rinse with more water or run the dekwasser more often clean the residues fully.

/ STP 50-41



Sunny Tripower CORE1

Stands on its own

/ **NOW with Arc-fault circuit interrupter and I-V curve diagnoses**

inter solar award 2017 WINNER

SMA ShadeFix
STRING LEVEL OPTIMIZATION

Cost-Effective
- Floor-mounted device easy to install
- No DC fuses required
- Integrated DC disconnector

Highly Integrated
- Integrated Wi-Fi access with any mobile device
- 12 direct string inputs reduce labor and material costs
- Arc-fault circuit interrupter (AFCI)
- AC/DC overvoltage protection (optional)

Fastest Installation
- Fast grid connection due to easy inverter configuration and commissioning
- Completely accessible connection areas

Maximum Yields
- Up to 150% DC:AC ratio
- Yield increase without installation effort due to integrated shade management SMA ShadeFix
- I-V Generator diagnosis

The Sunny Tripower CORE1 is the world's first free-standing string inverter for decentralized rooftop and ground-based PV systems as well as covered parking spaces.

The CORE1 is the third generation in the successful Sunny Tripower product family and is revolutionizing the world of commercial inverters with its innovative design. SMA engineers developed an inverter that combines a unique design with an innovative installation method to significantly reduce installation time and provide all target groups with a maximum return on investment.
From delivery and installation to operation, the Sunny Tripower CORE1 generates widespread savings in logistics, labor, materials and services. Commercial PV installations are now quicker, more reliable and easier to complete than ever before.

BLOCK DIAGRAM

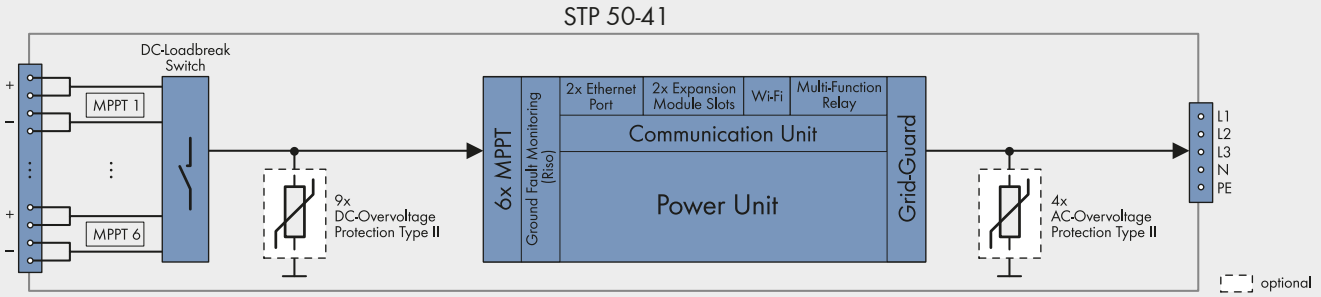

Technical Data	Sunny Tripower CORE1
Input (DC)	
Max. generator power	75000 Wp STC
Max. input voltage	1000 V
MPP voltage range at nominal power / Rated input voltage / MPP voltage range	500 V to 800 V / 670 V / 150 V to 1000 V
Min. input voltage / start input voltage	150 V / 188 V
Max. operating input current / per MPPT	120 A / 20 A
Max. short circuit current per MPPT / per string input	30A / 30A
Number of independent MPPT inputs / strings per MPP input	6 / 2
Output (AC)	
Rated power (at 230 V, 50 Hz)	50000 W
Rated / Max. apparent power	50000 VA / 50000 VA
Rated voltage	220 V / 380 V 230 V / 400 V 240 V / 415 V
Voltage range	202 V to 305 V
Grid frequency / range	50 Hz / 44 Hz to 55 Hz 60 Hz / 54 Hz to 65 Hz
Rated power frequency / rated grid voltage	50 Hz / 230 V
Rated / Max. output current	72.5 A / 72.5 A
Output phases / AC connection	3 / 3-(N)-PE
Power factor at rated power / Adjustable displacement power factor	1 / 0.0 leading to 0.0 lagging
THD	< 3%
Protective devices	
Input-side disconnection device	●
Ground fault monitoring / grid monitoring	● / ●
DC reverse polarity protection / AC short-circuit current capability / galvanically isolated	● / ● / –
All-pole sensitive residual-current monitoring unit	●
Protection class (according to IEC 62109-1) / overvoltage category (according to IEC 62109-1)	I / AC: III; DC: II
Arc-fault circuit interrupter (AFCI) / I-V Generator diagnosis	● / ●
AC/DC surge arrester (type 2, type 1/2)	○

Technical Data	Sunny Tripower CORE1
Efficiency	
Max. efficiency / European efficiency	98.1% / 97.8%
General data	
Dimensions (W/H/D) without feet or DC load break switch	569 mm / 733 mm / 621 mm (22.4 in / 28.8 in / 24.4 in)
Weight	84 kg (185 lb)
Operating temperature range	-25°C to +60°C (-13°F to +140°F)
Noise emission (typical)	< 65 dB(A)
Self-consumption (at night)	4.8 W
Topology / Cooling concept	Transformerless / OptiCool
Degree of protection (as per IEC 60529)	IP65
Climatic category (according to IEC 60721-3-4)	4K4H
Max. permissible value for relative humidity (non-condensing)	100%
Features / functions / accessories	
DC connection / AC connection	SUNCLIX / screw terminal
Mounting feet	●
LED indicators (status / fault / communication)	●
LC display	○
Interface: Ethernet / WLAN / RS485	● (2 ports) / ▲ / ○
Data interface: SMA Modbus / SunSpec Modbus / Speedwire, Webconnect	● / ● / ●
Multi-Function relay / Expansion Module Slots	● / ● (2 ports)
Shade management SMA ShadeFix / Integrated Plant Control / Q on Demand 24/7	● / ● / ●
Off-grid capable / SMA Fuel Save Controller compatible	● / ●
Guarantee: 5 / 10 / 15 / 20 years	● / ○ / ○ / ○
Certificates and permits (more available on request)	C10/11:2019, EN50549-1/-2, CE, VDE 0126-1-1, VDE AR-N 4110, VDE AR-N 4105:2018, NRS097-2-1:2017 (A3), CEI 0-16/0-21: 2020, VFR 2019, RD 1699/413, RD 661, TED/749/2020, AS 4777, IEC 61727, IEC 62109-1/2, IEC 62116, IEC 60068-2-x, TOR Erzeuger, G99, NBR 16149
Type designation	STP 50-41

● Standard features ○ Optional – Not available ▲ Depending on availability Data at nominal conditions - status: 01/2025

Efficiency Curve

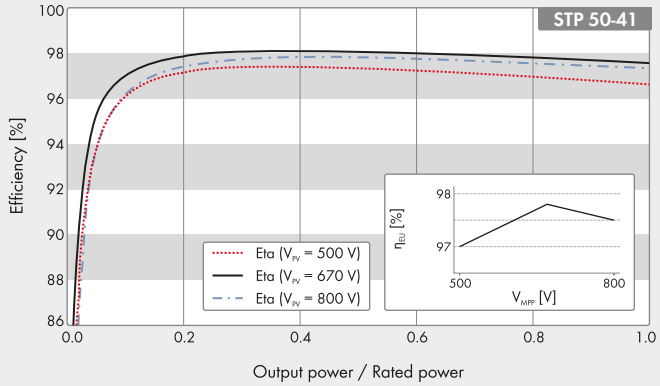

Assessories

SMA Sensor Module MD.SEN-40

SMA IO-Module MD.IO-40

SMA RS485 Module MD.485-40

Universal Mounting System UMS_KIT-10

AC Surge Protection Module Kit type 2, type 1/2
AC_SPD_Kit1-10, AC_SPD_KIT2_T1T2
DC Surge Protection Module Kit type 2, type 1/2
DC_SPD_Kit4-10, DC_SPD_KIT5_T1T2

STP50-41-DSen-20 SMA and Sunny Tripower are registered trademarks of SMA Solar Technology AG. Printed on FSC paper.
All products and services described as well as technical data are subject to change, even for reasons of country-specific deviations, at any time without notice. SMA assumes no liability for typographical or other errors. For current information, please visit www.SMA-Solar.com.
Solar Inverter made in Germany by SMA Solar Technology AG.

FireFly platform sensor node (multi-parameter sensor with GPS)	Article number FF02





The FireFly sensor node is a wireless data-transmission platform in a rugged industrial-grade housing. The FireFly onboard sensors are customizable. Through the connector a range of external devices can be connected. The available options are listed in this product catalog.

The onboard temperature and humidity sensors are not suited for use in direct sunlight: use the Solar Chimney (FF02SC) for accurate readings in high radiation environments.

FF02 platform sensor node		
dimensions & weight	**Ingress Protection (IP)**	**sampling interval**
l x w x h = 35 mm x 40mm x 110 mm weight: 127 g	IP 67 (with connector cap)	one measurement per 5 minutes longer intervals on request
Lora frequencies		**battery charge interval**
868 MHz (EU & Africa) 869,0 – 869,4 MHz (Morocco) 915 MHz (Australia & America's)		> 9 months @5 min. interval

FF02 options / add ons		
air temperature	**relative air humidity**	
range: - 15 … + 65 °C	range: 20 … 90% RH	accuracy: ± 1,5% RH
accuracy: ± 0,5 °C	range: 90 … 100% RH	accuracy: ± 2,5% RH
resolution: 0,01 °C	resolution: 0,01%	
GPS	**PAR**	**Barometric pressure**
accuracy: +/- 5 meters	± 5% (Apogee SQ 500SS calibrated)	
	calibrated for the solar spectrum	

Gateway (Indoor, ethernet, wifi)	Article number Gin



The gateway receives the Lora signals from the sensornodes and sends the data to the internet. This gateway has connection for ethernet and wifi. Each gateway can service +/- 100 sensornodes simultaneously.

frequency	range	network connections
868 MHz (EU + Africa) 915 MHz (Americas and Australia)	400m...1 km (indoor / obstacles) 1...3 km (urban)	ethernet, wifi
operating temperature	**operating moisture**	**power supply**
- 40 ... + 80 °C	extended < 80% rH	standard USB-C
	peaks < 95% rH	
	accessories included	**ingress protection**
	Lora antenna, USB-C cable	IP 30

R'n'D-modules for SYMBIOSYST 360W

Premium PV Panel for Greenhouse

The durable one.
For a green planet.

GENERATE MORE POWER
Shows an extremely high resistance to degradation phenomena (PID & LeTID).

PACKED FOR SAFE TRANSPORT
Packed upright, avoiding the emergence of microcracks and thus ensuring factory quality at the place of delivery.

A SUSTAINABLE CHOICE
A premium product, which lasts for decades. Manufactured according to rigid environmental standards, PFAS-free. Produced with 100 % green electricity.

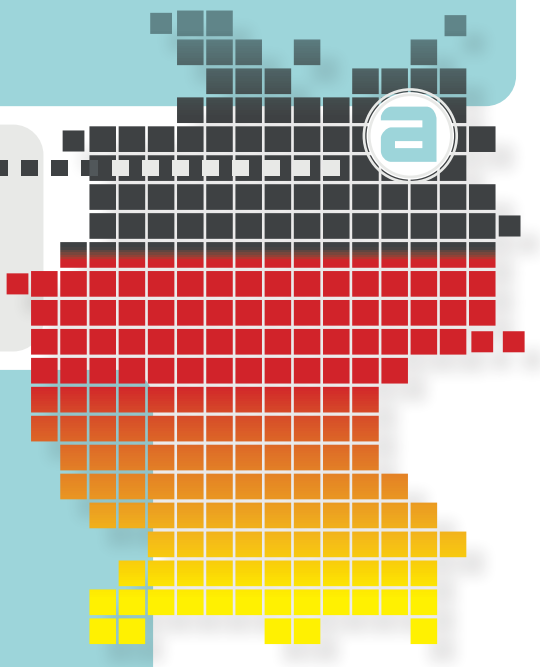

MADE IN GERMANY!

Right here. In Prenzlau. In our production facility. Here we manufacture under the aspects of quality & durability since 2001.

QUALITY UNDER HAND AND SEAL

Design optimized with SmartCalc.Module

aleo
www.aleo-solar.com

R'n'D-modules for SYMBIOSYST 360 W Premium PV panel

DIMENSIONS [mm]

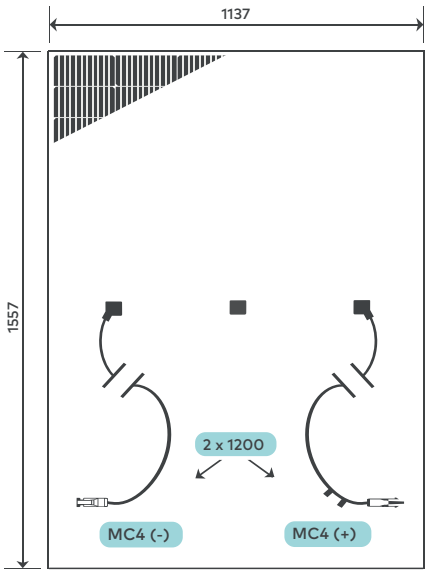

ELECTRICAL DATA (STC)

Rated power	P_{MPP}	[W]	360
Rated voltage	V_{MPP}	[V]	27.85
Rated current	I_{MPP}	[A]	12.92
Open-circuit voltage	V_{OC}	[V]	33.06
Short-circuit current	I_{SC}	[A]	13.53
Efficiency	η	[%]	20.3

Electrical values measured under standard test conditions (STC): 1000 W/m²; 25 °C; AM 1.5

BASIC MODULE DATA

Length x width x height	[mm]	1557 x 1137 x 5
Weight	[kg]	18
Number of cells		96
Cell size	[mm]	182 x 91
Cell material		Monocrystalline Si, PERC
Number of Busbars		10
Front sheet		3.2 mm Solar glass (TSG) with anti-reflective coating
Back sheet		Polymer sheet, white
Frame material		Frameless

ELECTRICAL DATA (LOW IRRADIANCE)

Power	P_{MPP}	[W]	70

Electrical values measured under: 200 W/m²; 25 °C; AM 1.5
Measurement tolerance of P_{MPP} under STC -3/+3 %
Accuracy of other electrical values -10/+10 %
Efficiency relating to gross module area

BASIC DATA JUNCTION BOX

3 parts junction box acc. to IEC 62790	[mm]	left & right: 62 x 58 x 14 middle: 49 x 55 x 14
Bypass diodes		3 (one per box)
IP class		IP68
Cable	[mm]	1200 (+), 1200 (-) acc. to EN 50618
Connectors		genuine MC4 acc. to EN 62852

CLASSIFICATION

Classification range (positive classification)	[W]	0/+9.99

TEMPERATURE COEFFICIENTS

Temperature coefficient I_{SC}	α (I_{SC})	[%/K]	+0.03
Temperature coefficient V_{OC}	ß (V_{OC})	[%/K]	-0.26
Temperature coefficient P_{MPP}	Y (P_{MPP})	[%/K]	-0.34

PLEASE CONTACT YOUR AUTHORISED ALEO DEALER

ALEO SOLAR GMBH
Marius-Eriksen-Straße 1
17291 PRENZLAU
GERMANY

CONTACT
+49 3984-8328-0
info@aleo-solar.com
www.aleo-solar.com

©aleo solar GmbH 12/2024

dyMat PYE MONO L PLUS®

PHOTOVOLTAIC | Optimized performance

PREMIUM BACKSHEET OPTIMIZED AND COMPLIANT TO NEW IEC NORMS.

High quality monolayer PET with UV and HR stabilization across whole width with extended life and superior abrasion resistance

The cell side is treated with a special primer which provides extremely high bonding to EVA. This primer can be supplied in different colours.
The laminate thickness has been designed to provide the best combination of properties in terms of electrical insulation and weatherability. Thanks to its excellent resistance to the atmospheric agents, its strong barrier to oxygen and humidity, the high voltage insulation and the long term resistance to UV and the hydrolysis of adhesives, dyMat PYE MONO L PLUS® is indicated for solar cell module encapsulation.

	Unit	Method	Typical values
PET thickness, air side, white	micron	caliper	158
Primer thickness	micron	caliper	50
Laminate thickness	micron	caliper	218
Unit weight	gr/sqm	10x10 weight	284
Tensile strength (MD)	N/10 mm	ASTM D-882	> 290
Tensile strength (TD)	N/10 mm	ASTM D-882	> 290
Elongation at break (MD)	%	ASTM D-882	> 120
Elongation at break (TD)	%	ASTM D-882	> 100
Heat shrinkage (MD) 150°C x 30'	%	ASTM D-1204	< 1,2
Heat shrinkage (TD) 150°C x 30'	%	ASTM D-1204	< 0,8
Layer peel strength	N/15 mm	T - peel (peak value)	> 6,0
EVA adhesion* (primer coated side vs EVA)	N/10 mm	internal	> 70
Water Vapour Transmission Rate (at 38°C 90% RH)	gr/sqm x day	ASTM F-1249	< 2,2
Breakdown voltage	kV	ASTM D-149	> 17
Partial discharge test	VDC	IEC 60664-1	> 1000
Reflectivity (420-700nm)	%	internal	Avg 87

All the values stated are to be considered as typical experimental values and not specification limits

Notes
Other thicknesses on request
Primer colours available: W (white), BK (black)
Other colours available upon request
Cut sheets (sizes, drills etc.) according to customer's specifications
Shelf life: 2 years

The above information is liable to change due to innovation and improvement in the manufacturing process.
We assume no liability for any infringement of any patent, copyright or design on the part of the customer while exploiting the film for different end-uses.

The polyester film employed in the manufacturing of dyMat PYE MONO L PLUS® is completely recyclable
dyMat PYE MONO L PLUS® is a Coveme registered trademark
Coveme is UNI EN ISO 9001:2008, ISO 14001:2004, OHSAS 18001:2007 certified

Date of revision: June 2017

COVEME EUROPE
Headquarters via Emilia Levante, 288 - 40068 S. Lazzaro di Savena - Bologna - Italy - Tel. +39 051 6226111
Registered Offices & Production Plant via A. Gregorcic, 16 - 34170 Zona Ind.le S. Andrea - Gorizia - Italy - Tel. +39 0481 579911
COVEME ASIA
Production Plant - No.4,Yuefeng road - Zhangjiagang - Jiangsu Province - China P.C. 215600 - Tel. +86 512 82559911
info@coveme.com
www.coveme.com

ANNEXES - DATASHEETS of the Scalea demo

valmont



Description of the agri-trackers of Barcelona and Bolzano demonstrators

Abbreviations

Abbreviations	Definitions
CU	Conversion Unit: portion of the plant belonging to the same ground network. Usually, it collides with a subfield.
DS	Switchboard to supply tracker actuator, where is housed a network Industrial switch and a 6-port RS-232/422/485 Serial Device Server.
GUI	Graphical User Interface: the software's
IPC	Industrial personal computer
IT	Information Technologies
PV	Photovoltaic
PS	Power Switchboard. It supplied the tracker actuators within the subfield.
QCC	Switchboard where is housed in the main tracker (second level SCADA) Server and allows access to HMI (optional). Each QCC could manage about 5MWp without any additional QP.
QP	Switchboard where is housed a network Industrial switch and a 4-port RS-232/422/485 Serial Device Servers.
RM	Resource Manager
SCADA	Supervision Control and Data Acquisition system
SF	Subfield: where all trackers are under the same snow and wind strategies and ground network.
SW	Software
TK	Tracker Kit is the mechanical component kit for tracker movement
TRJ-AI	Convert Tracker Control System™ software
TRK	Single-axis tracker
TSS	TRACKER SCADA SYSTEM

1. Background

As the Symbiosyst project, two different trackers were developed for AgriPV applications by Convert, tailored to the needs of the two Demo plants in the project: Demo in Bolzano and Demo in Barcelona.

The two trackers developed are different in terms of the track frame, while they are completely similar in terms of the mechanical handling part, the power supply system, the control system and the weather sensors.

More in detail:

- the structure of both trackers are completely innovative in shape and in many design solutions,
- the part concerning movement, power supply and control, refers to solutions already used to some extent by Convert in its standard trackers.

Therefore, bellow are reported:

- the technical data sheets of the two steel structures respectively trackers for Bolzano demo and Barcelona demo.
- The technical data sheets of all other components of the two trackers, which as indicated are the same in both cases.

2 . Main components of the power/control system.

The Convert power supply, movement control and handling is a system composed of many different devices:

1. QCC or Central Control Switchboard: it is the control unit (PLC) embedding all the functions that allow the monitoring and the control of the entire solar power plant **(SCADA)**.
2. QP or Remote Switchboard: it is a local unit that acts as an extension of the QCC, enabling to add additional weather sensors and/or to control one or more subfields.
3. PS or Power Switchboard: It is connected to LV or auxiliary transformers and is responsible to supply all the DS within the subfield.
4. DS or Distribution Switchboard: it is supplied by the PS and is responsible to supply the power and the communication to all the actuators connected to it.
5. Sensors: provide useful information and enable to set strategies for the safety of the entire system and optimal tracking.
6. Accessories: their existence depend on the PV plant requirements. For instance, whether wireless antenna (WLAN) are optional devices, they may become mandatory for a specific architecture, used for redundancy in case fiber optic is in use or to reach isolated portions of a plant.

MAIN (QCC) / REMOTE (QP) UNIT SWITCHBOARD



POWER SWITCHBOARD



DISTRIBUTION SWITCHBOARD

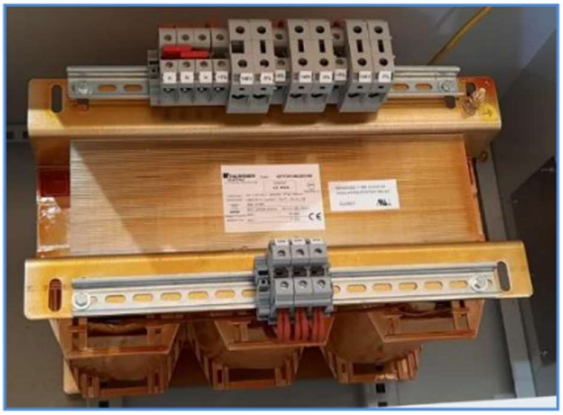

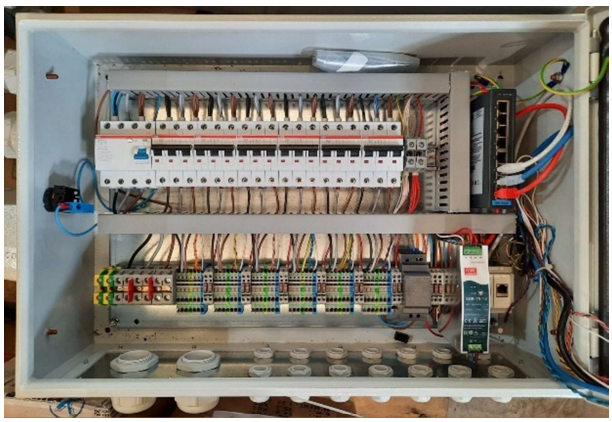

THREE-PHASE LINEAR ACTUATOR

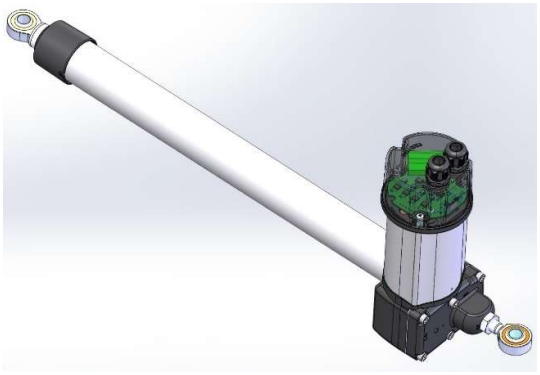

ELECTRONIC CONTROL BOARD

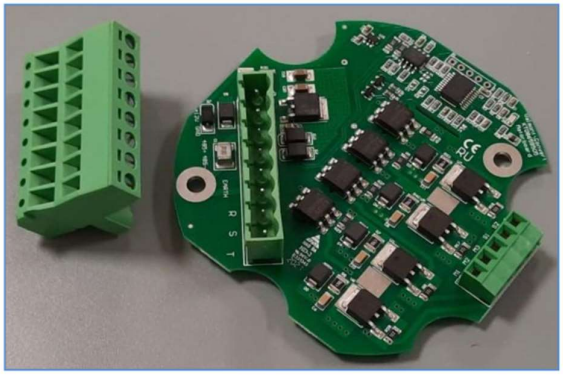

8-cores cable with conductors' colour.



GPS

IRRADIANCE SENSOR (PYRANOMETER)



SNOW SENSOR



ULTRASONIC WIND SENSOR



ANEMOMETER (WIND SPEED SENSOR)



ANEMOSCOPE (WIND DIRECTION SENSOR)



WLAN MAIN UNIT (OMNI) WITH ACCESS POINT



WLAN REMOTE UNIT (NANOSTATION)



All device respect the following guideline:

- **1993/68/EEC Directive of Council of the European Communities** dated July 22nd, 1993, and related to CE marking
- **2006/42/CE Directive of European Parliament** dated May 17th, 2006, related to machines
- **2006/95/CE Directive** on the approximation of the laws of the Member States relating to electrical equipment intended to be used within certain voltage limits
- **2004/108/CE Directive** on the approximation of the laws of the Member States relating to electromagnetic compatibility
- **2012/19/UE RAEE** Directive related to the waste of electrical and electronic equipment Identification Label

3 .DATASHEETS of power/control system componets.

SCADA QCC

TECHNICAL SPECIICATIONS	
Voltage	120 – 240 Vac +-10%
Frequency	50/60 Hz +-5%
Power Supply	1Phase + Neutral + Ground or 2Phase + Ground
Rated Current	2 A
Power Factor	0.6-1
Insulation Voltage	1000 Vac

COMMUNICATION
N°2 standard RS485 ports with additional stabilized 24Vdc power supply for tracker wireless system
N°2 standard RS485 ports with additional NOT stabilized 24Vdc power supply for wind speed and direction sensors
N°1 standard RS485 ports with additional stabilized 12Vdc power supply for snow sensor
N°1 standard RS232 port with additional stabilized 5Vdc power supply for GPS device
N°1 ethernet LAN port for an external internet connection
N°1 ethernet LAN port for an internal LAN connection with the plant QPs. An internal POE 24Vdc is integrated in the port to power the PLANT Wi-Fi connection.
N° 1 sun sensor port
Control interface to connect up to 40 tracker control boxes with up to 400 tracker axes

ACTUATOR

TECHNICAL SPECIICATIONS	
Thrust Load	20 kN
Mid-stroke static load limit	60 kN
Stroke	410mm
Speed	Max 1.75 mm/s
Voltage AC	148Vac ± 5%
Rated Frequency	50-60 Hz
Protection grade	IP 65
Thermal protection	Built-in thermal switch. Operating time 400s at 230 V / 5060 Hz – 20 °C
Configuration	Symmetrical three-phase induction actuator
Max. Current	0.85 A (60 kN)
Max. Power	130 W / 262 VA at 148V / 50-60 Hz
Nominal power	217 VA / 435 VA at 148V / 50-60 Hz

ELECTRONIC CONTROL BOARD

INPUT	
AC Voltage	DC Voltage
148 Vac ± 10%	12 Vdc ± 10%
50-60 Hz ± 5%	
Type 3P + G	
Nominal current 0.8 A	Nominal Current 20 mA
Integrated over-temperature protection	

LINEAR ACTUATOR CONTROL OUTPUT
Three-phase electric actuator driver

COMMUNICATION
RS485 Transceiver

FAILURE ALERTS
Status signal via n° 4 LED integrated on the board

OTHER CHARACTERISTICS
Micro controller unit 32 bits – 100 MHz – 512 kb flash
Static actuator driver controller
MTBF 500’000 hours

MECHANICAL CHARACTERISTICS
Diameter 90mm
Diameter 90 mm

ENVIRONMENTAL OPERATING CONDITIONS
Operating temperature -30 ÷ 85 °C
Max. operating altitude < 2000m asl

8-CORES CABLE FOR LINEAR ACTUATOR

TECHNICAL SPECIFICATIONS	
Type	Multipolar
Construction	Multipolar + outer sheath (Black)
Nominal size	4 x 1.0 mm^2 + 4 x 0.5 mm^2
Conductor	Flexible bar copper class 5 CEI EN 60228
Nominal conductor construction	Size 1.5mm: 28 wires x Φ 0.25mm Size 0.5mm: 16 wires x Φ 0.2mm
Max conductor resistance at 20 °C	Size 1.5mm: 13.3 Ohm/km Size 0.5mm: 39.0 Ohm/km
Average insulation thickness	Size 1.5mm: 0.7 mm Size 0.5mm: 0.7 mm
Core outer diameter	Size 1.5mm: 2.9 ± 0.1 mm Size 0.5mm: 2.3 ± 0.1 mm
Sheath material	PVC thermoplastic compound type DMV18 U.V. resistant according to HD605
Outer cable diameter	Max. 13 mm
Rated voltage U_o/U	0.45 / 0.75 kV
Max. operating temperature (on the conductor)	-40 ÷ 80 °C
Cable laying conditions	Cable duct without underground joints

POWER SWITCHBOARD

INPUT
Voltage 800/660/400 Vac ± 5%
Frequency 50 Hz ± 5%; 60Hz ± 5%
Type 3 P + G
Nominal power absorption 50 kVA Maximum power absorption 40 kVA / 60 kVA
Isolated
Integrated over-current protection

OUTPUT
8 x Three-Phase voltage outputs for Convert equipment
1 x Single-Phase voltage output for Convert equipment
Integrated over-current protection
Each power output provides power up to 2 Convert Distribution Switchboards
Each power output provides power up to 600 Convert Tracker Actuators

MECHANICAL CHARACTERISTICS
Cable entries from the side
Box size 610 x 460 x 720 (h) mm
Weight about 180 kg
Protection degree IP44 (box)
Cable entries from the side
Box size 610 x 460 x 720 (h) mm

ENVIRONMENTAL OPERATING CONDITIONS
Operating temperature -30°C ÷ +50°C
Storage temperature -20°C ÷ 60°C
Max. operating altitude < 2000m asl
Natural cooling without external air exchange

POWER SWITCHBOARD PROTECTION BOX

INPUT
Voltage: 800/660/400 Vac ± 5% / 148Vac ± 5%
Frequency 50 Hz ± 5%; 60Hz ± 5%
Type 3-phase + Ground
Nominal current: 46A
Icu: 6kA
Integrated over-voltage protection
Protection degree: IP65
Wall mounted
Cable entry: from the bottom

MAIN COMPONENTS
Metalic box 600x400x200 mm
Fuse holder 1000Vac 22x65mm
Circuit breaker 3x125 A
Fuse holder 600Vac 10x38mm

INPUT
Type: Fuses
Fuse holder 1000Vac 22x65mm
DIN rail 7,5x35mm mounting
Rated Voltage 1000Vac – 1500Vdc
Rated Current: 100A
SC withstand (SCCR): 50kA

DISTRIBUTION SWITCHBOARD

INPUT
Customized voltage supplied by Power Switchboard or through Smart Power technology
Frequency 50 Hz ± 5%; 60Hz ± 5%
Type 3 P + G
Nominal current 14 A
Power factor 0.4-1
Integrated over-voltage protection
Customized voltage supplied by Power Switchboard

OUTPUT
Up to N°8 power output to control up to 80 actuators
For each output up to10 actuators be connected in daisy chain

LINEAR ACTUATOR CONNECTION BUS
Up to N° 4 RS485 transceiver
Integrated over-voltage protection according to IEC 61000-4-5 Surge 1kV
Electrical insulation 1.5kV

FAILURE ALERTS
Status signal via n°4 LED integrated on the board
Complete alarm signaling to the CONVERT TRJ-AI Scada System

ETHERNET INTERFACE
N. 2 bus connectors (in/out) for a daisy chain connection up to 6 distribution switchboards
TCP-IP communication protocol with the CONVERT TRJ-AI Scada System

WIRELESS OPTION
The ethernet cable can be replaced by a wireless link
5GHz wi-fi link between the distribution switchboard and the Convert Scada QCC in the substation
The ethernet cable can be replaced by a wireless link

OTHER CHARACTERISTICS
Micro controller unit 32 bit – 100 MHz – 512 kB flash
Static actuator driver controller
Automatic restart after a power failure
MTBF 500’000 hours

MECHANICAL CHARACTERISTICS
Supporting plate for the connection on the tracker’s pile
Total size 700 x 500 x 300 mm (with sun and rain screen)
Box size 600 x 400 x 200 mm
Weight about 20 kg
Protection degree IP65 (box)

WIND SENSORS

ELECTRICAL FEATURES		
	Anemometer	Anemoscope
Power supply	9-30 Vdc	9-30 Vdc
Maximum current	100 mA	20 mA
Output	RS485	RS485
Output maximum current	100mA	50 mA
MEASUREMENT PERFORMANCE		
Range	3-180 km/h	0-360º
Starting speed	8 km/h	3 km/h
Survival speed	200 km/h	200 km/h
Accuracy	1 km/h (3-15 km/h) 3% (15-180Km/h)	+/-3º
GENERAL FEATURES		
Material	PA + FV	PA+FV / Aluminium
Bearings	Stainless steel X65Cr13	Stainless steel X65Cr13
Type of connection	Cable: 4x0.65mm^2	Cable: 4x0.65mm^2
Cable length	10m	10m
Weight	160 g	170 g
Dimensions	125x139mm	129x190 mm
Storage temperature	-35ºC +80ºC	35ºC +80ºC
Working temperature without ice	-20ºC +70ºC	-20ºC +60ºC
Reference standards	EN 61000-6-2:2001 EN 55022:2001, Class B	EN 61000-6-2:2001 EN 55022:2001, Class B
Protection degree	IP65 (UNE 20324:1993)	IP65 (UNE 20324:1993)

SNOW SENSOR

MEASUREMENT PERFORMANCE			
Measurement range (TNU04)	0.6 ÷ 4 m		
Accuracy	± 1 cm		
Sensibility	0.5 cm		
Beam width at 3DS	12° ± 2°		
WORKING CONDITIONS			
Temperature	-20°C ÷ +65°C		
Humidity	0% ÷ 100%		
OUTPUTS			
RS485-MODBUS	Temperature, height		
Voltage	0 ÷ 2 V ↔ 0 ÷ 5m		
Current	4 ÷ 20 mA ↔ 0 ÷ 5m		
POWER SUPPLY AND CONSUMPTION			
Input voltage	10 ÷ 16 Vdc		
Consumption [mA]	Minimum	Typical	Maximum
RS485 MODBUS/0 ÷ 2 V (TNU04)	-	1	-
RS485 MODBUS/0 ÷ 2 V (TNU08)	1	1.5	-
4 ÷ 20 mA	7	-	30
Capsule drive peak power [W]	14.4		
MECHANICAL CHARACTERISTICS			
Enclosure material	Plastic, ABS, aluminium alloy and inox hardware		
Weight	1.6kg		
Dimensions	210 mm; height 323 mm		
Protection grade	IP67		
Connection	7-poles male		

ULTRASONIC WIND SENSOR

MEASUREMENT PERFORMANCE	
Reporting range	0-76 m/s
Response time	0.25 s
Accuracy	±3 % at 10 m/s
Output resolution	0.1 m/s / 1°
Azimuth	0-360°
Update interval	1 – 3600s, at 1s steps
ELECTRICAL FEATURES	
Operating voltage	6 - 24 V DC (−10 ÷ +30 %)
Heating voltage	DC, AC, or full-wave rectified AC 12 - 24 V DC (−10 ÷ +30 %) 12 - 17 V ACrms (−10 ÷ +30 %)
Typical heating current	12 V DC: 800 mA, 24 V DC: 400 mA
Digital output	RS485
Communication protocol	MODBUS RTU
WORKING CONDITIONS	
Temperature	−52 ÷ 60 °C (−60 ÷ +140 °F)
Humidity	0 ÷ 100 %RH
Pressure	500 ÷ 1100 hPa
Wind	0 ÷ 60 m/s
MECHANICAL CHARACTERISTICS	
Dimensions	141 × 114 mm
Weight	510 g
Materials	Polycarbonate +20 % fiberglass Stainless steel (AISI 316)
Protection degree	IP65
Compliance marks	CE, RCM, RoHS, China RoHS, UKCA
Reference standards	EN 61326-1, industrial environment CISPR 32 / EN 55032, Class B, IEC 60068-2-1, 2, 6, 14, 30, 31, 78 IEC 60529, VDA 621-415, IEC 60945 (Exposed) DNV GL Type Examination Certificate No. TAA00000VF

WLAN MAIN UNIT ANTENNA

TECHNICAL DETAILS
Dimensions (mm): 799x90x65
Weight: 0,82 Kg
Power supply (POE): 24V – 0,5A
Wind Survivability: 200Km/h
Gain: 13 DSi
Operating Frequency: 5,45-5,85 GHz
Cross-pol Isolation: 25 DS minimum
Max. VSWR: 1,5:1
Beamwidth: 7° (Elevation)

WLAN REMOTE UNIT ANTENNA

TECHNICAL DETAILS
Dimensions (mm): 163x31x80
Weight: 0,18 Kg
Power supply (POE): 24V – 0,5A
Max Power consumption: 5,5W
Gain: 13 DSi
Operating Frequency: 5170-5875 MHz
Cross-pol Isolation: 20DS minimum
Max. VSWR: 1,4:1
Beamwidth: 45° (H-Pol)/45° (V-Pol) / 45° (Elevation)

4 . Tracker Barcellona Demo

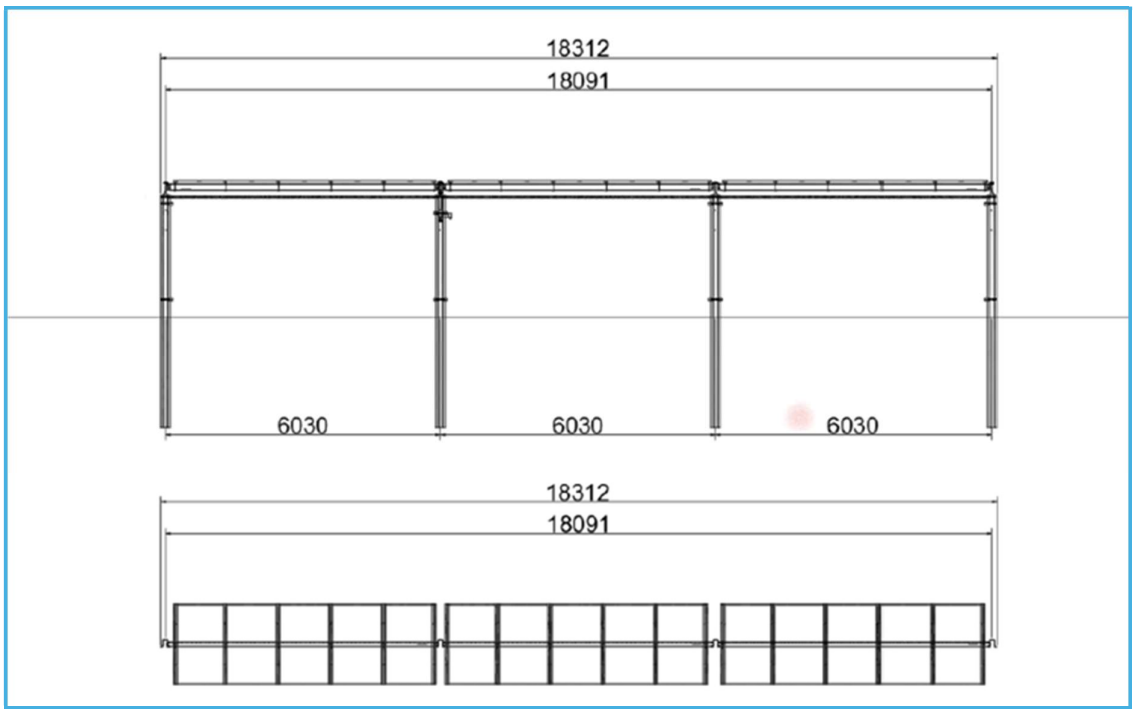

Top and Front View

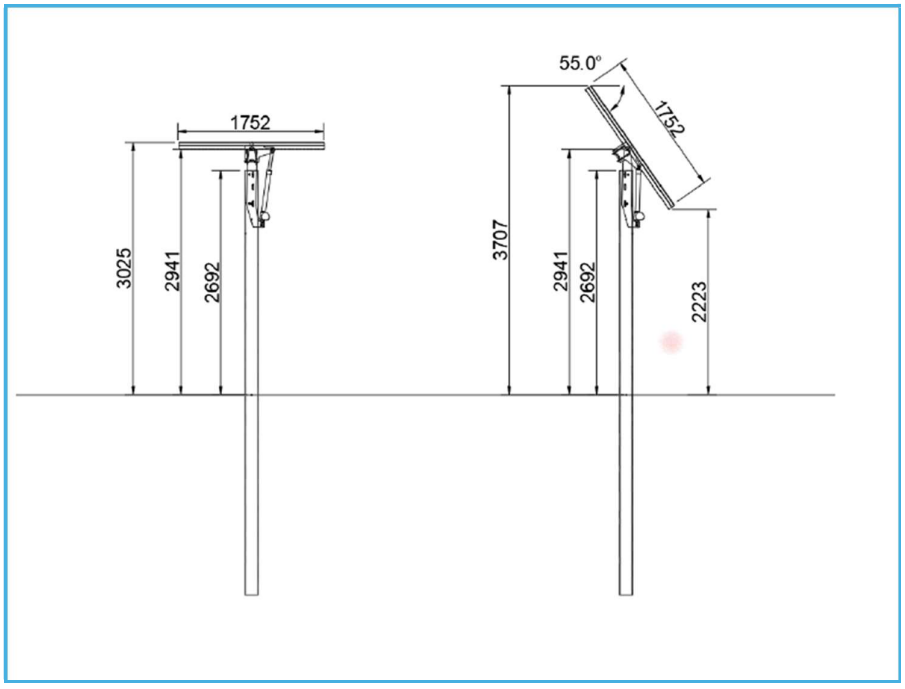

Lateral View

SOLAR TRACKING

Type of tracking system: horizontal single axis tracking system with back-tracking
Axis Tilt 0°
Axis Azimuth 0°
Tracking angle ± 50°
Maximum tracking error ± 2°

DESEGN SPECIFICATIONS

1 x 15 PV-modules in portrait configuration
Dimensions 18.291 m x 1.752 m x 3.5 96 (h Max) / 2.20 (h Min)
Minimum height over ground at maximum tracking angle: 2.20 m
Foundation: 4 driven pile
Photovoltaic area 31.69 m^2
Length of PV area 18.092 m
Foundations piles will be hot dip galvanized according with EN ISO 1461: 80.micron, Other parts will be galvanized according to the environmental constraints: 50 micron, mm
The tracker can be installed by four workers using: lift platform, mechanical crane lift and standard tools and mechanical equipment's for moving single components. No welding or cuttings are planned on site during installation phases
No mechanical transmission components between two tracker. The tracker is completely adaptable to geotechnical condition of site.
Balanced system: rotation axis is located on the center of gravity of the moving part of the structure
Stow position: 0°
Stow position wind conditions: • wind gust 3 sec.: 15,6 m/sec, at a height of 5 m • constant-speed wind. 29 m/sec, at a height of 5 m

DESIGN REFERENCE CODE

-
- EN 1990 (2006) – Basis of structural design
- EN 1991-1-3 (2015): Eurocode 1: Actions on structures - Part 1-3: General actions – snow loads;
- EN 1991-1-4 (2010): Eurocode 1: Actions on structures - Part 1-4: General actions – Wind actions;
- EN 1993-1-1 (2014): Eurocode 3: Design of steel structures - Part 1-1: General rules and rules for buildings;
- EN 1993-1-3 (2007): Eurocode 3: Design of steel structures - Part 1-3: General rules – Supplementary rules for cold-formed members and sheeting;
- EN 1993-1-5 (2017): Eurocode 3: Design of steel structures - Part 1-5: General rules – Plated structural elements;
- EN 1993-1-8 (2017): Eurocode 3: Design of steel structures - Part 1-8: General rules – Design of joints;
- EN 1997-1 (2017): Eurocode 7: Geotechnical design - Part 1: General rules;
- EN 1998-1 (2013): Eurocode 8: Design of structures for earthquake resistance - Part 1: General rules, seismic actions and rules for buildings;
- DB SE- AE (2009): Documento Básico Seguridad Estructural Acciones en la edificación
- NCSE-02 (2004): Norma de Construcción Sismorresistente: Parte general y edificación

5 .Tracker Bolzano Demo

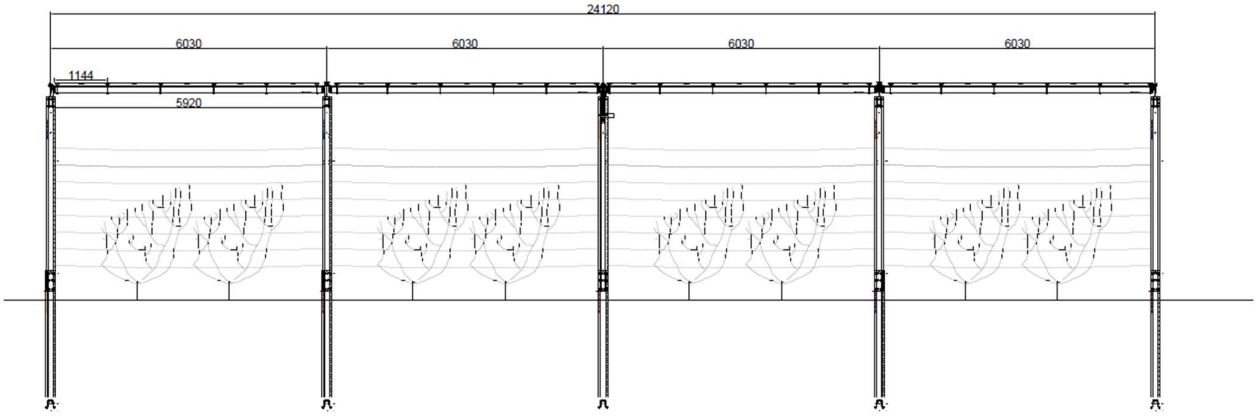

Front View

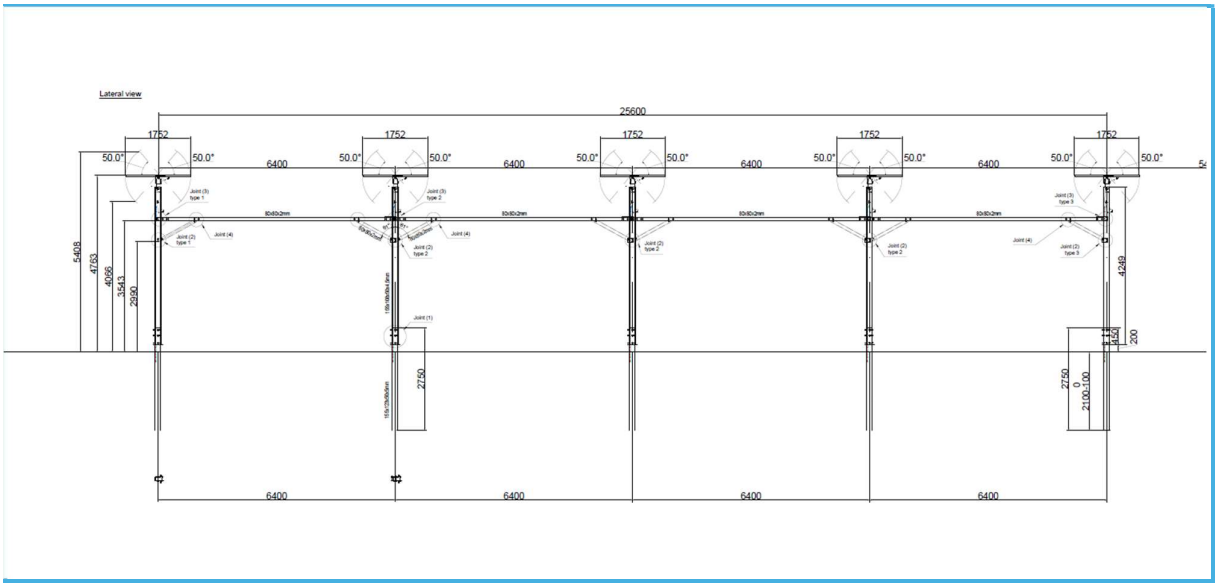

Lateral View

SOLAR TRACKING

Type of tracking system: horizontal single axis tracking system with back-tracking
Axis Tilt 0°
Axis Azimuth 0°
Tracking angle ± 50°
Maximum tracking error ± 2°

DESEGN SPECIFICATIONS

1 x 20 PV-modules in portrait configuration; modulus dimension: 1752x1144x40 mm
Dimensions 24.120 m x 1.752 m x 5.408 (h Max) / 4.763 (h Min)
Minimum free height over ground at maximum tracking angle: 3.543 m
Foundation: 5 driven pile
Rows of trackers connected to each other at poles by beam, a height of 3.5 m.
Photovoltaic area 40,04 m^2
Length of PV area 22,88 m
Foundations piles will be hot dip galvanized according with EN ISO 1461: 80.micron, Other parts are in Weathering Steel
The tracker can be installed by four workers using: lift platform, mechanical crane lift and standard tools and mechanical equipment's for moving single components. No welding or cuttings are planned on site during installation phases
No mechanical transmission components between two tracker. The tracker is completely adaptable to geotechnical condition of site.

Balanced system: rotation axis is located on the center of gravity of the moving part of the structure
Stow position: 0°
Stow position wind Conditions: • wind gust 3 sec.: 15,6 m/sec, at a height of 5 m • constant-speed wind. 29 m/sec, at a height of 5 m

DESIGN REFERENCE CODE

- EN 1990 (2006) – Basis of structural design
- EN 1991-1-3 (2015): Eurocode 1: Actions on structures - Part 1-3: General actions – snow loads;
- EN 1991-1-4 (2010): Eurocode 1: Actions on structures - Part 1-4: General actions – Wind actions;
- EN 1993-1-1 (2014): Eurocode 3: Design of steel structures - Part 1-1: General rules and rules for buildings;
- EN 1993-1-3 (2007): Eurocode 3: Design of steel structures - Part 1-3: General rules – Supplementary rules for cold-formed members and sheeting;
- EN 1993-1-5 (2017): Eurocode 3: Design of steel structures - Part 1-5: General rules – Plated structural elements;
- EN 1993-1-8 (2017): Eurocode 3: Design of steel structures - Part 1-8: General rules – Design of joints;
- EN 1997-1 (2017): Eurocode 7: Geotechnical design - Part 1: General rules;
- EN 1998-1 (2013): Eurocode 8: Design of structures for earthquake resistance - Part 1: General rules, seismic actions and rules for buildings;
- DB SE- AE (2009): Documento Básico Seguridad Estructural Acciones en la edificación
- NCSE-02 (2004): Norma de Construcción Sismorresistente: Parte general y edificación

Harvest the Sunshine

DEEP BLUE 3.0

Mono

550W MBB Bifacial Mono PERC Half-cell Double Glass Module

JAM72D30 525-550/MB/1500V Series

Introduction

Assembled with 11BB bifacial PERCIUM cells and half-cell configuration, these double glass modules have the capability of converting the incident light from the rear side together with the front side into electricity, providing higher output power, lower temperature coefficient, less shading loss, as well as enhanced tolerance for mechanical loading.

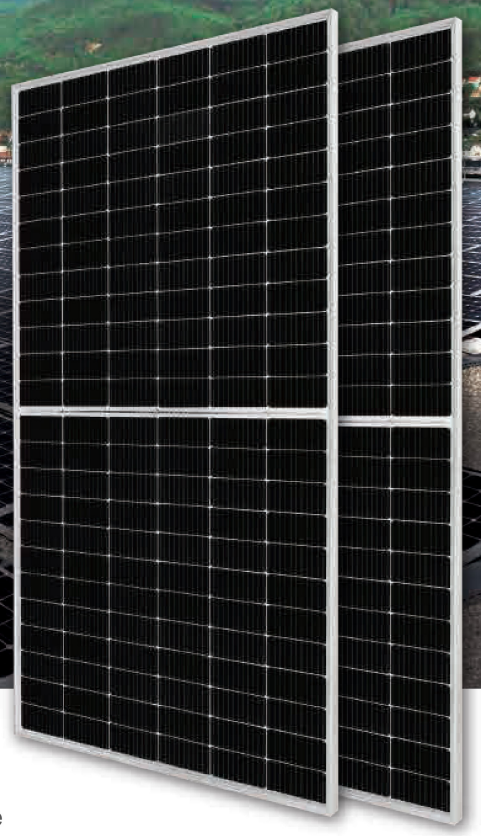

- Higher output power
- More reliable, more stable power generation
- Less shading effect
- Lower temperature coefficient

Superior Warranty

- 12-year product warranty
- 30-year linear power output warranty

0.45% Annual Degradation Over 30 years

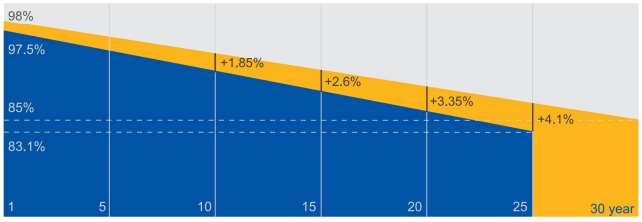

- Bifacial double glass module linear power warranty
- Standard module linear power warranty

Comprehensive Certificates

- IEC 61215, IEC 61730
- ISO 9001: 2015 Quality management systems
- ISO 14001: 2015 Environmental management systems
- ISO 45001: 2018 Occupational health and safety management systems

JA SOLAR

www.jasolar.com

Specifications subject to technical changes and tests.
JA Solar reserves the right of final interpretation.
Shanghai JA Solar Technology Co., Ltd.

JAM72D30 525-550/MB/1500V Series

MECHANICAL DIAGRAMS

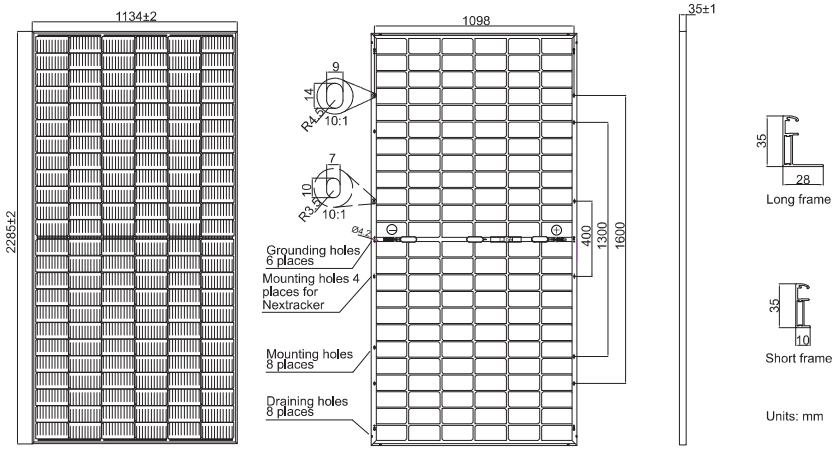

Remark: customized frame color and cable length available upon request

SPECIFICATIONS

Cell	Mono
Weight	31.6kg±3%
Dimensions	2285±2mm×1134±2mm×35±1mm
Cable Cross Section Size	4mm² (IEC), 12 AWG(UL)
No. of cells	144(6×24)
Junction Box	IP68, 3 diodes
Connector	Genuine MC4-EVO2 QC 4.10-35/45
Cable Length (Including Connector)	Portrait:300mm(+)/400mm(-); Landscape:1300mm(+)/1300mm(-)
Front Glass/Back Glass	2.0mm/2.0mm
Country of Manufacturer	China/Vietnam

ELECTRICAL PARAMETERS AT STC

TYPE	JAM72D30 -525/MB/1500V	JAM72D30 -530/MB/1500V	JAM72D30 -535/MB/1500V	JAM72D30 -540/MB/1500V	JAM72D30 -545/MB/1500V	JAM72D30 -550/MB/1500V
Rated Maximum Power(Pmax) [W]	525	530	535	540	545	550
Open Circuit Voltage(Voc) [V]	49.15	49.30	49.45	49.60	49.75	49.90
Maximum Power Voltage(Vmp) [V]	41.15	41.31	41.47	41.64	41.80	41.96
Short Circuit Current(Isc) [A]	13.65	13.72	13.79	13.86	13.93	14.00
Maximum Power Current(Imp) [A]	12.76	12.83	12.90	12.97	13.04	13.11
Module Efficiency [%]	20.3	20.5	20.6	20.8	21.0	21.2
Power Tolerance	0~+5W					
Temperature Coefficient of Isc(α_Isc)	+0.045%/°C					
Temperature Coefficient of Voc(β_Voc)	-0.275%/°C					
Temperature Coefficient of Pmax(γ_Pmp)	-0.350%/°C					
STC	Irradiance 1000W/m², cell temperature 25°C, AM1.5G					

Remark: Electrical data in this catalog do not refer to a single module and they are not part of the offer.They only serve for comparison among different module types.
Measurement tolerance at STC: Pmax ±3 %, Voc ±3% and Isc ±4%.

ELECTRICAL CHARACTERISTICS WITH 10% SOLAR IRRADIATION RATIO

TYPE	JAM72D30 -525/MB	JAM72D30 -530/MB	JAM72D30 -535/MB	JAM72D30 -540/MB	JAM72D30 -545/MB	JAM72D30 -550/MB
Rated Max Power(Pmax) [W]	562	567	572	578	583	589
Open Circuit Voltage(Voc) [V]	49.54	49.67	49.80	49.93	50.03	50.21
Max Power Voltage(Vmp) [V]	41.14	41.31	41.47	41.65	41.78	41.95
Short Circuit Current(Isc) [A]	14.61	14.68	14.76	14.83	14.91	14.98
Max Power Current(Imp) [A]	13.65	13.73	13.80	13.88	13.95	14.03
Irradiation Ratio(rear/front)	10%					

*For NexTracker installations, Maximum Static Load, Front is 2400Pa while Maximum Static Load, Back is 2400Pa.

**Bifaciality=Pmax,rear/Rated Pmax,front

OPERATING CONDITIONS

Maximum System Voltage	1500V DC
Operating Temperature	-40°C~+85°C
Maximum Series Fuse Rating	30A
Maximum Static Load,Front* Maximum Static Load,Back*	3600Pa, 1.5 1600Pa, 1.5
NOCT	45±2°C
Bifaciality**	70%±10%
Fire Performance	UL Type 29

CHARACTERISTICS

Current-Voltage Curve JAM72D30-540/MB/1500V

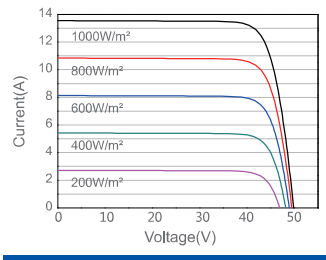

Power-Voltage Curve JAM72D30-540/MB/1500V

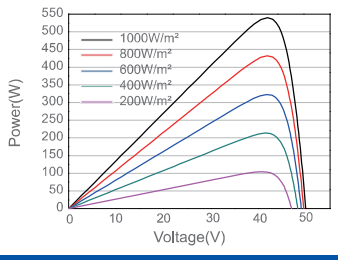

Current-Voltage Curve JAM72D30-540/MB/1500V

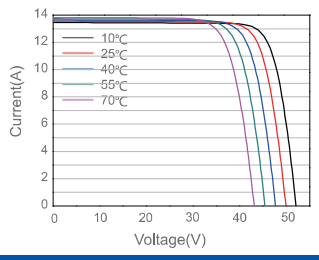

ZCS AZZURRO - INVERTER IBRIDO TRIFASE

HYD 10000 ZSS / HYD 15000 ZSS/HYD 20000 ZSS



- Gestione automatica dei flussi di energia da fotovoltaico, batteria e rete
- Energy Meter integrato a bordo macchina
- Parallelabile
- Possibilità di funzionamento in modalità zero immissione in rete
- Unità compatibile con batteria al litio ad alta tensione (200-750V)
- Modalità di supporto Stand Alone, garantisce la continuità di esercizio ed il funzionamento in isola, sia da fonte fotovoltaica che da batteria, in caso di black-out elettrico

SCHEMA A BLOCCHI

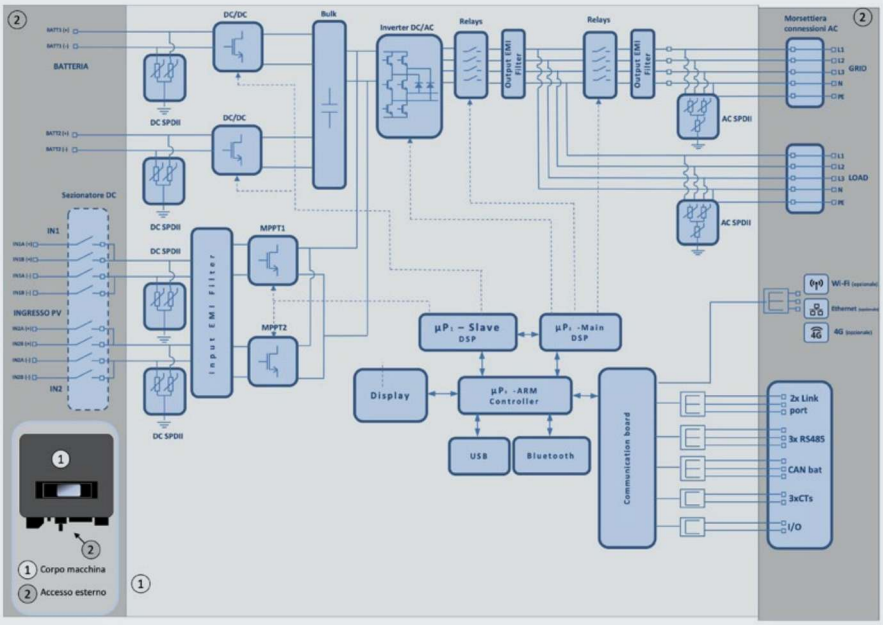

DATI TECNICI	3PH HYD10000 ZSS	3PH HYD15000 ZSS	3PH HYD20000 ZSS
Dati tecnici ingresso DC (fotovoltaico)			
Potenza DC Tipica*	15000W	22500W	30000W
Massima Potenza DC per ogni MPPT	7500W (300V-850V)	11250W (450V-850V)	15000W (600V-850V)
N. MPPT indipendenti/ N. stringhe per MPPT	2/2		
Tensione massima di ingresso	1000V		
Tensione di attivazione	250V		
Tensione nominale di ingresso	600V		
Intervallo MPPT di tensione DC	180V-960V		
Intervallo di tensione DC a pieno carico	220V-850V	350V-850V	450V-850V
Massima corrente in ingresso per ogni MPPT	25A/25A		
Massima corrente assoluta per ogni MPPT	30A/30A		
Dati tecnici collegamento batterie			
Tipo di batteria compatibile	Ioni di litio (fornite da Zucchetti)		
Intervallo di tensione ammessa	180V-750V		
Numero di canali batteria indipendenti	2 canali batteria HV (configurabili come indipendenti o in parallelo)		
Massima potenza di carica/scarica	10000W	15000W	20000W
Range di temperatura ammesso**	-10°C/+50°C		
Massima corrente di carica per canale batteria	25A (35A di picco per 60s)		
Massima corrente di scarica per canale batteria	25A (35A di picco per 60s)		
Curva di carica	Gestita da BMS batteria		
Profondità di scarica (DoD)	0%-90% (programmabile)		
Uscita AC (lato rete)			
Potenza nominale	10000W	15000W	20000W
Potenza massima	11000VA	16500VA	22000VA
Massima corrente	16A	24A	32A
Tipologia connessione/Tensione nominale	Trifase 3/N/PE, 220/380, 230/400		
Intervallo di tensione AC	184V~276V (in accordo con gli standard locali)		
Frequenza nominale	50Hz/60Hz		
Intervallo di frequenza AC	45Hz~55Hz / 55Hz~65Hz (in accordo con gli standard locali)		
Distorsione armonica totale	<3%		
Fattore di potenza	1 default (programmabile +/- 0.8)		
Limitazione immissione in rete	Programmabile da display		
Uscita EPS (Emergency Power Supply)			
Potenza erogata in EPS***	10000W	15000W	20000W
Potenza apparente di picco in EPS***	20000VA per 60s	22000VA per 60s	22000VA per 60s
Tensione e frequenza uscita EPS	Trifase 230V/400V 50Hz		
Corrente erogabile in EPS (di picco)	16A (30A per 60s)	24A (32A per 60s)	32A (33A per 60s)
Distorsione armonica totale	3%		
Switch time	<20ms		
Efficienza			
Efficienza massima	98.2%		
Efficienza peseta (EURO)	97.7%		
Efficienza MPPT	99.9%		
Massima efficienza di carica/scarica delle batterie	97.8%		
Consumo in stand-by	<15W		
Protezioni			
Protezione di interfaccia interna	si	no	
Protezioni di sicurezza	Anti islanding, RCMU, Ground Fault monitoring		
Protezione da inversione di polarità DC	si		
Sezionatore DC	integrato		
Protezione da surriscaldamento	si		
Categoria Sovratensione/Tipo di protezione	Overvoltage Category III / Protective class I		
Scaricatori integrati	AC/DC MOV: Tipo 2 standard		
Protezione da sovracorrenti in uscita	si		
Soft Start Batteria	si		
Standard			
EMC	EN61000-1, EN61000-3		
Safety standard	IEC62109-1, IEC62109-2, NB-T32004/IEC62040-1		
Standard di connessione alla rete	Certificati e standard di connessione disponibili su www.zcsazzurro.com		
Comunicazione			
Interfacce di comunicazione	Wi-Fi/4G/Ethernet (opzionali), RS485 (protocollo proprietario), USB , CAN 2.0 (per collegamento con batterie), Bluetooth		
Altri ingressi	Linea RS485 per Meter esterni (fino a 4 meter collegabili), 6 input digitali (5V TTL), connessione per sensori diretti (CT)		
Dati Generali			
Intervallo di temperatura ambiente ammesso	-30~60 °C		
Topologia	Transformerless		
Grado di protezione ambientale	IP65		
Intervallo di umidità relativa ammesso	0~100%		
Massima altitudine operativa	4000m		
Rumorosità	<45 dB @ 1m		
Peso	37Kg		
Raffreddamento	Convezione forzata		
Dimensioni (H*L*P)	515mm*571mm*264mm		
Display	LED display e APP		
Garanzia	10 anni		

* La potenza DC tipica non rappresenta un limite massimo di potenza applicabile. Il configuratore online disponibile sul sito www.zcsazzurro.com fornirà le possibili configurazioni applicabili
** Valore standard per batterie al litio; massima operatività tra +10°C/+40°C
*** La potenza erogata in EPS dipende dal numero e dal tipo di batterie nonché dallo stato del sistema (capacità residua, temperatura)

SCHEDA TECNICA: BATTERIE ZCS HIGH VOLTAGE

ZCS AZZURRO HV ZBT 5K

Dati tecnici	
Modello	ZCS – AZZURRO HV ZBT 5K
Codice	ZZT-BAT-ZBT5K
Tecnologia	Litio Ferro Fosfato
Dimensioni (A*L*P)	708mm*420mm*170mm
Peso	50 Kg
Classe di protezione	IP65
Montaggio	A terra impilabili
Kit cavi di connessione	Incluso con la batteria
BMS	Integrato (necessario BDU esterno per protezione in alta tensione - ZZT-ZBT5K-BDU)
Intervallo di temperatura di utilizzo in carica*	0°C - +50°C
Intervallo di temperatura di utilizzo in scarica*	-10°C - +50°C
Intervallo di umidità relative ammesso	0....95% senza condensazione
Massima altitudine operativa	2000m
Cicli operativi in condizioni standard**	>6000
Numero massimo di batterie installabili in parallelo	4
Certificazioni	IEC62619, IEC62040-1, CE, UN 38.3
Garanzia	10 anni
Comunicazione	RS232, RS485, CAN bus
Dati capacità	
Capacità nominale singolo modulo	5.12 kWh
Capacità utile singolo modulo (profondità di scarica 90%)	4.61 kWh
Capacità utile complessiva (profondità di scarica 90%)	Da 4.61 kWh (con 1 modulo) Fino a 18.44 (con 4 moduli in parallelo)
Tensione nominale	400 V
Corrente carica massima***	Da 7A (singolo modulo) fino a 28 A (4 moduli)
Corrente scarica massima***	Da 7A (singolo modulo) fino a 28 A (4 moduli)
Profondità di scarica massima	90%

* per garantire le massime prestazioni è consigliata l'installazione in un ambiente a temperatura controllata tra 15°C a 40°C (al di sotto dei 15°C le batterie si autoproteggono limitando la corrente di carica)
**Condizioni operative standard per batterie: temperatura ambiente 25°C, umidità relativa 40%, profondità di scarica 80%
***Le correnti effettive di carica e scarica possono essere limitate dalle condizioni operative della batteria, nonché dagli inverter alle quali le batterie sono collegate. Si prega di riferirsi alla scheda tecnica degli inverter per l'effettiva corrente di carica e scarica.

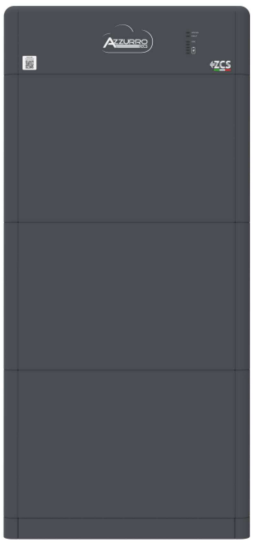



Zucchetti Centro Sistemi S.p.A. - Green Innovation Division
Via Lungarno, 248 - 52028 Terranuova Bracciolini - Arezzo, Italy
tel. +39 055 91971 - fax. +39 055 9197515
innovation@zcscompany.com - zcs@pec.it - **zcsazzurro.com**
Reg. Pile IT12110P00002965 - Capitale Sociale € 100.000,00 I.V.
Reg. Impr. AR n.03225010481 - REA AR - 94189
Azienda Certificata ISO 9001 - Certificato n. 9151 - CNS0 - IT-17778

Identificazione: MD-AL-GI-00
Rev. 4.0 del 31.01.18 - Applicazione: GID
V1.0/24

APOGEE QUANTUM SENSORS

Original X & Full-spectrum Series



The photosynthetically active radiation measurement tool of choice for lighting researchers

Features

Apogee Instruments Quantum Sensors are the tool of choice for researchers and agricultural professionals measuring photosynthetically active radiation (PAR) all over the world. Apogee offers two types of quantum sensors: a **Full-spectrum Quantum** and **Original X Quantum Sensor.** Consult our spectral response graph to decide which model is right for your application.

Accurate, Stable Measurements

Cost-effective, original quantum sensors work well for broadband radiation sources (sun, high-pressure sodium, metal halide, cool white fluorescent lamps), while full-spectrum sensors are good for all light sources, including LEDs. Offers a self-cleaning, cosine-corrected head that is fully-potted for a waterproof design.

Typical PPFD Measurement Applications

- Incoming and reflected PPFD over and under plant canopies in greenhouses, in fields, and in growth chambers
- Aquatic environments including salt water aquariums and freshwater lakes and streams

Calibration Traceability

Apogee SQ series quantum sensors are calibrated through side-by-side comparison to the mean of four transfer standard sensors under a reference lamp. The reference sensors are recalibrated with a quartz halogen lamp traceable to the National Institute of Standards and Technology (NIST).

Spectral Response

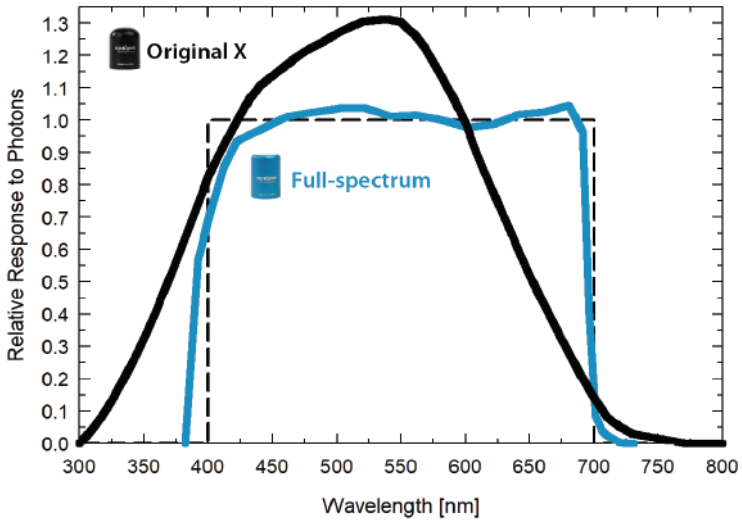

Spectral response of **original X quantum sensor (black)** and **full-spectrum quantum sensor (blue)** compared to defined response of plants to radiation (dashed).

Spectral Errors

	Apogee SQ-500	Apogee SQ-100X	LI-COR LI-190	Kipp & Zonen PQS 1
Sun (Clear Sky)	**0.0**	0.0	-0.4	-1.0
Sun (Cloudy Sky)	**0.1**	0.2	-0.2	-1.3
Sun (Reflected from Grass Canopy)	**-0.3**	5.0	-0.8	1.1
Sun (Transmitted below Wheat Canopy)	**0.1**	7.0	-0.1	-0.3
Cool White Fluorescent (T5)	**0.0**	7.2	0.0	0.0
Metal Halide	**0.9**	6.9	0.2	-1.7
Ceramic Metal Halide	**0.3**	-8.8	0.4	-0.7
High Pressure Sodium	**0.1**	3.3	1.3	1.4
Red LED (667 nm peak, 20 nm full-width half-maximum)	**2.8**	-56.7	3.5	-1.8
Red, Blue, White LED Mixture (60 % Red, 25 % White, 15 % Blue)	**-2.0**	-21.2	2.6	-1.7

FULL-SPECTRUM QUANTUM SENSORS

SQ-500 Series



Output Options

- 0 to 40 mV
- 0 to 5 V
- USB
- Modbus
- 0 to 2.5 V
- 4 to 20 mA
- SDI-12
- or hand-held meter

MQ-500



Product Specifications

	SQ-500-SS	SQ-512-SS	SQ-514-SS	SQ-515-SS	SQ-520	SQ-521-SS	SQ-522-SS
Power Supply	Self-powered	5 to 24 V DC	12 to 24 V DC	5.5 to 24 V DC	5 V USB power source	5.5 to 24 V DC	
Current Draw	–	At 12 V is 57 µA	maximum of 20 mA	At 12 V is 57 µA	61 mA when logging	1.4 mA (quiescent), 1.8 mA (active)	RS-232 37 mA; RS-485 quiescent 37 mA, active 42 mA
Output (sensitivity)	0.01 mV per µmol m^{-2} s^{-1}	0.625 mV per µmol m^{-2} s^{-1}	0.004 mA per µmol m^{-2} s^{-1}	1.25 mV per µmol m^{-2} s^{-1}	–		
Resolution	–				0.1 µmol m^{-2} s^{-1}	–	
Calibration Factor (reciprocal of output)	100 µmol m^{-2} s^{-1} per mV	1.6 µmol m^{-2} s^{-1} per mV	250 µmol m^{-2} s^{-1} per mA	0.8 µmol m^{-2} s^{-1} per mV	Custom for each sensor and stored in the firmware		
Calibration Uncertainty	± 5 %						
Output Range	0 to 40 mV	0 to 2.5 V	4 to 20 mA	0 to 5 V	USB	SDI-12	Modbus
Measurement Repeatability	Less than 0.5 %						
Long-term Drift	Less than 2 % per year						
Non-linearity	Less than 1 % (up to 4000 µmol m^{-2} s^{-1})						
Response Time	Less than 1 ms				Software updates every second	Less than 0.6 s	Less than 200 ms
Field of View	180°						
Spectral Range	389 to 692 nm ± 5 nm (wavelengths where response is greater than 50 %)						
Directional (cosine) Response	± 5 % at 75° zenith angle						
Temperature Response	-0.11 ± 0.04 % per C						
Operating Environment	-40 to 70 C; 0 to 100 % relative humidity; can be submerged in water up to depths of 30 m						
Dimensions	24 mm diameter, 37 mm height	30.5 mm diameter, 37 mm height			24 mm diameter, 37 mm height	30.5 mm diameter, 37 mm height	
Mass (5 m of cable)	100 g	140 g			100 g	140 g	
Warranty	4 years against defects in materials and workmanship						

ORIGINAL X QUANTUM SENSORS

SQ-100X, SQ-200X, & SQ-400X Series



Output Options

- 0 to 400 mV
- 0 to 5 V
- USB
- Modbus
- 0 to 2.5 V
- 4 to 20 mA
- SDI-12
- or hand-held meter

MQ-200X



Product Specifications

	SQ-100X-SS	SQ-202X-SS	SQ-204X-SS	SQ-205X-SS	SQ-420X	SQ-421X-SS	SQ-422X-SS
Power Supply	Self-powered	5 to 24 V DC	7 to 24 V DC	5.5 to 24 V DC	5 V USB power source	5.5 to 24 V DC	
Current Draw	–	10 µA	22 mA maximum; 2 mA quiescent	10 µA	61 mA when logging	1.4 mA (quiescent), 1.8 mA (active)	RS-232 37 mA; RS-485 quiescent 37 mA, active 42 mA
Output (sensitivity)	0.1 mV per µmol m^{-2} s^{-1}	0.6 mV per µmol m^{-2} s^{-1}	0.004 mA per µmol m^{-2} s^{-1}	1.25 mV per µmol m^{-2} s^{-1}	–		
Calibration Factor (reciprocal of output)	10 µmol m^{-2} s^{-1} per mV	1.6 µmol m^{-2} s^{-1} per mV	250 µmol m^{-2} s^{-1} per mA	0.8 µmol m^{-2} s^{-1} per mV	Custom for each sensor and stored in the firmware		
Calibration for Uncertainty	± 5 %						
Output Range	0 to 250 mV	0 to 2.5 V	4 to 20 mA	0 to 5 V	USB	SDI-12	Modbus
Measurement Repeatability	Less than 0.5 %						
Long-term Drift	Less than 2 % per year						
Non-linearity	Less than 1 % (up to 2500 µmol m^{-2} s^{-1})	Less than 1 % (up to 4000 µmol m^{-2} s^{-1})			Less than 1 % (up to 2500 µmol m^{-2} s^{-1})		
Response Time	Less than 1 ms				Software updates every second	Less than 0.6 s	Less than 200 ms
Field of View	180°						
Spectral Range	370 to 650 nm (wavelengths where response is greater than 50 % maximum)						
Directional (cosine) Response	± 5 % at 75° zenith angle						
Temperature Response	-0.04 % per C						
Operating Environment	-10 to 60 C; 0 to 100 % relative humidity; can be submerged in water up to 30 m						
Dimensions	30.5 mm diameter, 36.6 mm height						
Mass (5 m of cable)	90 g	140 g			90 g	140 g	
Warranty	4 years against defects in materials and workmanship						

Dimensions

SQ-500 & SQ-520

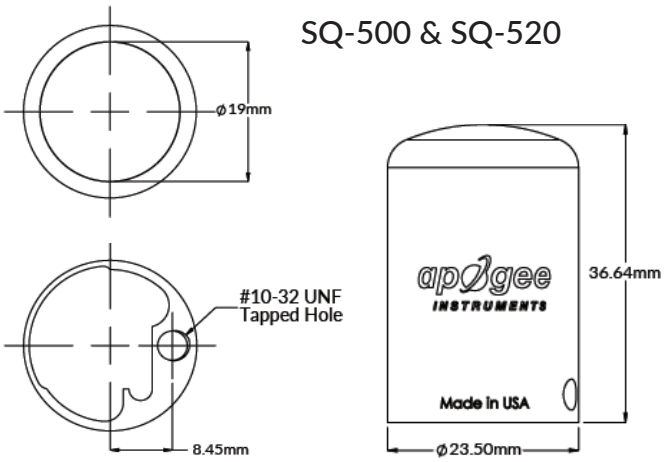

All other full-spectrum quantum and original X quantum models

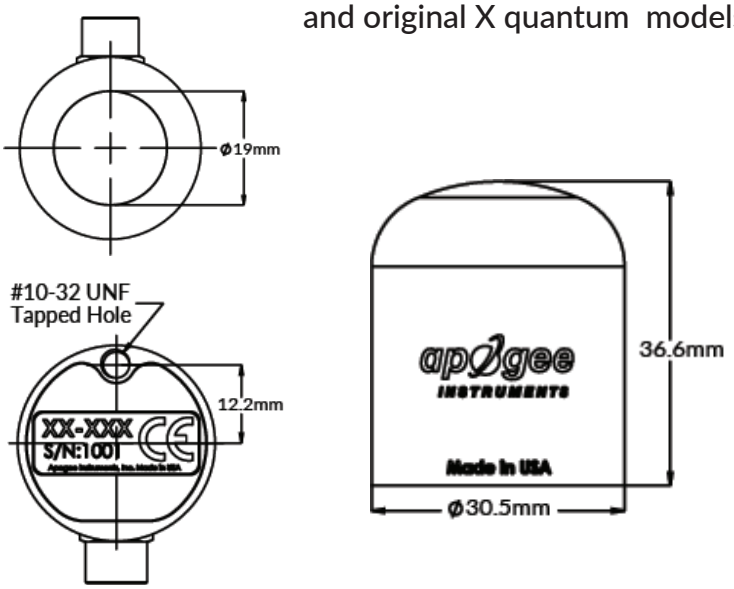

SQ-100X
& SQ-420X

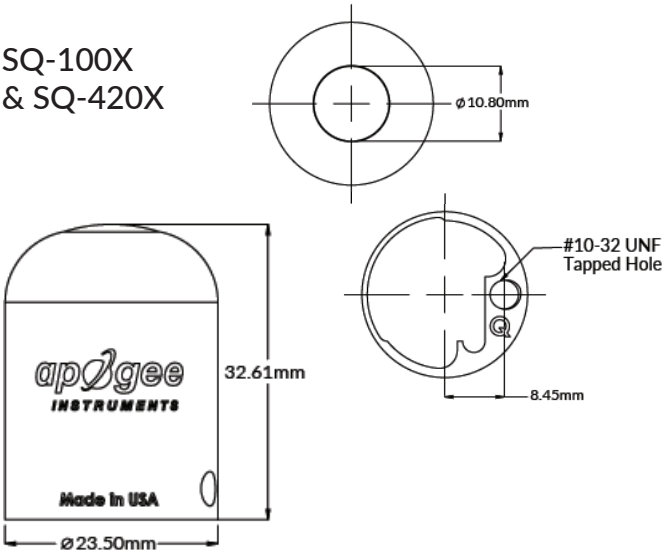



Case Study

The **Kuwait Institute for Scientific Research** used Apogee's **MQ-510** underwater full-spectrum quantum meters to help model algal species and their growth rate in Kuwait Bay. This research advances the researchers' understanding of the frequent algal bloom and fish kill incidents that typically occur in the summer.



GroPoint™

Growing innovation.

GroPoint Lite

Accurate and reliable analog or digital soil moisture sensor

The GroPoint™ Lite soil sensor is robust, reliable and highly accurate, providing cost effective soil moisture and temperature measurements. The sleek, lightweight design installs quickly with minimal soil disruption. When installed vertically, the sensor averages volumetric moisture content over a soil layer of about 6” (15cm). When installed horizontally, the sensor can be used to measure moisture at a specific soil depth.

GroPoint Lite can be deployed in irrigation-sensitive zones, such as around the root zone, to enable full control of precision irrigation needs.

- ✔ Soil moisture (and temperature with digital versions) sensor
- ✔ Flexible interface options (SDI-12, MODBUS and 4-20ma) simplify integration into a broad range of applications, ancillary equipment and data loggers.
- ✔ Moisture readings can be user-calibrated with 3rd-order polynomials to meet custom requirements.
- ✔ Low power requirements—suitable for remote, autonomous applications.
- ✔ Patented TDT^5 technology for scientific-grade accuracy and excellent long-term stability of measurements.
- ✔ Fully potted electronics for excellent durability.

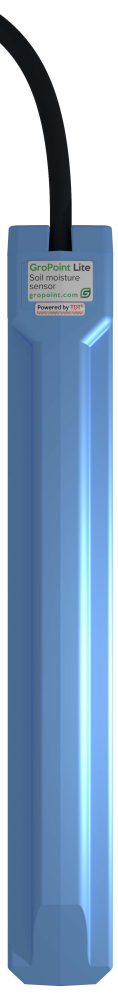

Our proprietary TDT[5] technology delivers an **exceptional price:performance ratio**, with performance as good (in most cases better) as sensors costing much more.

GroPoint™ sensors are based on the field-proven Time Domain Transmission (TDT) method of reliably measuring soil moisture, which is a refined version of Time Domain Reflectometry (TDR). TDT-based sensors do not need to be calibrated to each type of soil they will be buried in.

TDT5 enhances TDT in 5 key ways:

1: Accurate across entire length

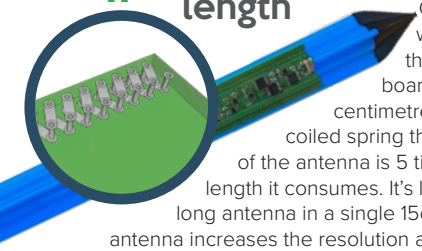

Our patented design weaves the antenna through the circuit board 20 times per centimetre, and much like a coiled spring the effective length of the antenna is 5 times the physical length it consumes. It's like having a 75cm long antenna in a single 15cm sensor. A larger antenna increases the resolution and sample area of each sample, allowing more noise to be filtered out. This gives highly accurate tracking of moisture changes with no "dead spots".

2: Reduced manufacturing costs

Unlike other moisture probes, Gropoint sensors do not have separate components for electronics and bulky metal antennas. By integrating the antenna and all electronics into the same circuit board (possible thanks to the patented antenna design), manufacturing costs are dramatically reduced.

TDT5

Our patented technique for soil moisture measurement

3: Repeatable accuracy

400,000 pulses filtered per measurement

Each time a measurement is taken, GroPoint sends 400,000 pulses through the sensing element to generate data for the measurement, then employs advanced filtering to eliminate outlying readings (noise) before averaging the data and sending the measurement as SDI-12 output. This ensures that the same extreme accuracy (±1%) is obtained each and every time moisture is measured.

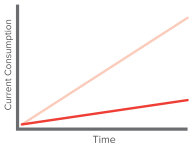

4: Low power consumption

Despite 400,000 pulses for each measurement, the total time to take the measurement is less than 100 ms. This means that power consumption is minimal, and that permits GroPoint sensors to be operated for many months with small 9V battery-powered data loggers.

5: Maximum durability

Unlike typical sensors, the antenna is not exposed to the soil, so there's nothing to bend or break. The entire sensor circuit board (including antenna) is sealed in epoxy, then encased in a sealed polycarbonate housing.



Technical Specifications

MOISTURE

Measurement range	0% to 100% of VMC
Accuracy	±2.0% *
Precision	< 0.2%

TEMPERATURE (DIGITAL VERSIONS ONLY)

Measurement range	-20°C to +70°C (-4°F to 158°F)
Accuracy	±0.5°C

ELECTRICAL

Interface	**Analog:** 4-20 mA **Digital:** SDI-12, **MODBUS**
Connection	Bare wire (optional 4 pin, IP66/IP68 rated environmental connector)
Warm-up time	**Analog:** < 100 ms **Digital:** < 1 sec
Input voltage	6 to 14 VDC max. 18 VDC
Current consumption	**0-5 mA:** 18 mA (nominal), 25mA (max) **4-20 mA:** 30mA (nominal), 50 mA (max) **Digital:** < 0.1 mA (quiescent), 15-35 mA (active)

ENVIRONMENTAL

Operating temperature	-20°C to +70°C (-4°F to 158°F)
Storage temperature	-40°C to 85°C (-40°F to 185°F)

PHYSICAL

Dimensions	19.6 cm x 2.0 cm x 0.56 cm (7.7" x 0.8" x 0.2")
Weight	272 g (0.6 lb.)
Cable weight	38 g per m (0.42 oz. per foot)
Standard cable	5 m (16.3 ft.) 3xAWG22 (4xAWG22 for digital version) dual-shielded, twisted pair, rated for direct burial
Warranty	1-year limited parts and labour

* 8% to 42% VMC, in controlled laboratory conditions; factory calibrated for most agricultural soils. In field applications, accuracy may slightly decrease due to the inevitable heterogeneity of soil texture, soil compaction, moisture and fluctuation in soil temperature. The accuracy may also decrease in difficult soil conditions (higher clay and salinity content). In normal conditions, GroPoint sensors will maintain their accuracy from permanent wilting through field capacity in sandy loam through clay soils with less than 60% clay particles. Under moderately saline conditions. GroPoint sensors will maintain their accuracy up to 6 ds/m.

Ordering

Analog 4-20mA Output (Moisture Sensor): Part #2577

SDI-12 or MODBUS Digital Interface (Moisture and Temperature Sensor): Part #2585

GroPoint™

RioT Technology Corp.
10114 McDonald Park Rd, Suite #220
North Saanich, BC V8L 5X8
CANADA

1 833 GRO-POIN (North America)
250 412 6642 (rest of the world)
gropoint.com

ENGLISH

METOS®
BY PESSL INSTRUMENTS

µMETOS NB-IoT

USER MANUAL

Version 2.1, 02-2022



Thank you for choosing an µMETOS NB-IoT weather station for monitoring your agrometeorological and other environmental parameters. The µMETOS NB-IoT has been designed to monitor data with a wide variety of sensor sets. Like all products of the METOS® family, it measures, logs and sends data to the FieldClimate platform. The users have access to data through the web and mobile applications as well as via API services which enables interface for other custom applications.

Additional services (ex. plant disease models and hyper localized weather forecasts) are available with a license fee.

µMETOS NB-IoT systems will be mainly used for:

- meteorological monitoring,
- site specific weather forecast corrected with local measurements,
- plant disease models,
- soil moisture and irrigation systems monitoring,
- hydrology and flood warning applications,
- environmental monitoring.

Pessl Instruments GmbH
Werksweg 107, 8160 Weiz, Austria
office@metos.at
+43 317 255 21

Pessl INSTRUMENTS

YOUR µMETOS NB-IoT

The µMETOS NB-IoT consists of one plastic case containing the electronics, the battery and the internal or external antenna. It can be customized with a wide variety of sensors for soil moisture, water level, temperature, salinity and more.
In the package with the device you will also find, taped to the solar panel, a sticker with a unique serial number and the keys that grants you the option to register the product under your FieldClimate platform profile and access the measured data.

On the picture to the right:
µMETOS NB-IoT



MAIN PRODUCT VARIATIONS:

- **µMETOS BASE:** a basic µMETOS NB-IoT station with no physical sensors
- **µMETOS FROST:** base + Wet & Dry bulb temperature sensors
- **µMETOS DISEASE:** base + rain gauge, air temperature, air humidity and leaf wetness sensors
- **µMETOS ET0:** base + rain gauge, air temperature, air humidity, global radiation, wind speed sensor
- **µMETOS ET0 DISEASE:** base + rain gauge, air temperature and humidity, leaf wetness, global radiation, ultrasonic wind speed and direction sensor

Supported mobile networks:
µMETOS NB-IoT Gen. 4 comes with a Sierra Wireless HL7802 modem. The HL7802 module supports Cat-M1/NB1 worldwide networks with 2G "GPRS" fallback and is fully compliant with the 3GPP Release 13 standard. More about the supported frequencies and countries can be found at: https://www.sierrawireless.com/iot-solutions/products/hl7802/ .

Supported sensors:
List of supported sensors can be found in the extended manual, available on the metos.at/manuals website.

START-UP THE µMETOS NB-IoT

By default, the µMETOS NB-IoT weather station comes with a disconnected battery and based on your order, it can come with or without the SIM card.

To start up the μMETOS NB-IoT it requires opening the housing, optionally inserting the SIM card, checking the settings via the USB cable connected to the PC with the TeraTerm application and connecting the battery.

To use the NBIoT or Cat-M1 connectivity, you need to have a micro SIM card which is provisioned for the NBIoT/Cat-M1 network from the network provider and sufficient signal from the radio tower.

Opening the Housing
Video instruction:
https://bit.ly/3sl6xIW

Take housing off
Video instruction:
https://bit.ly/3L92rfz

Insert Sim and Turn on battery
Video instruction:
https://bit.ly/3rxnGzZ

Take out Sim and Turn off battery
Video instruction:
https://bit.ly/3B4weBj

Configuration, sensors and connectivity checkup (Running test)
Video instruction:
https://bit.ly/3AZVGbe

Full μMETOS NB-IoT user manual:
https://bit.ly/35JH9Vo
For more detailed info visit
metos.at/manuals

INSTALLING µMETOS NB-IoT

Before the final installation on the pole, it is advised that the user reads and performs items written in the startu-up section of this manual.

The µMETOS NB-IoT has to be fixed on the pole: at the bottom of the unit there is a plastic ring with a metal clamp on. Make sure that the pole is as vertical as possible by checking the bubble level on the rain gauge to ensure the right installation verticality of the pole or use a leveler.

Place the solar panel on the main plastic box. In the northern hemisphere, it should be facing south while in the southern hemisphere it will be facing north. Solar panel require direct view to the Sun, not obstructed or in dark shades to ensure good battery charge.

Rain gauge is integrated on the plastic box as depicted in the above figure µMETOS NB-IoT. Make sure the sensors are installed correctly.

USE YOUR µMETOS NB-IoT

To start using services we provide, the weather station needs to successfully communicate with our FieldClimate cloud. After the first data is delivered to the cloud, you need to register on the FieldClimate platform, which gives you access to the transmitted data in graphs or tables. FieldClimate also provides a powerful decision support system for growing your crops (plant protection, irrigation, sowing, harvesting, fertilizing).

REGISTER AS A NEW USER ON FieldClimate.com

1. Open fieldclimate.com and log in as an existing user or register as a new FieldClimate user.

2. After creating a new account you will receive an email with a confirmation link with which you confirm creation of your FieldClimate profile.



ADD YOUR µMETOS DEVICE TO YOUR ACCOUNT

1. Locate the sticker with the device serial number and Key1 and Key2 passwords on the product.

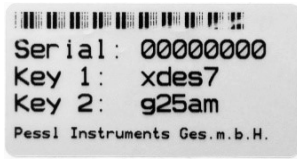

Key 1 gives you full (admin) access and enables you to change all the settings and set up the μMETOS.

With Key 2 the user is not allowed to change the station parameters, but can access all the data.

2. To add your μMETOS device, click on the icon in the top right corner User Menu > Add/Remove station. It will ask you for the Sta tion Serial number (SN) and the station key.

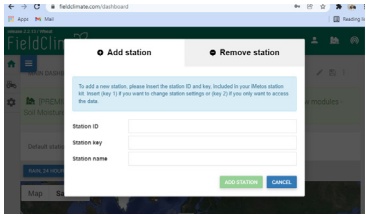

THE FieldClimate DASHBOARD, STATION DATA AND SETTINGS

In the **Dashboard**, the user can manage the fast access to the services of highest interest. On the top right corner, Station List allows you to choose among all the registered devices.

On the navigation bar, Station data page displays the data measured by your device. Data can be viewed in detailed graphs and tables. You can access the structured menu, which allows you to define time-series resolution and export data in a chart or table. On the left side, you can see all sensors connected to your μMETOS NB-IoT.

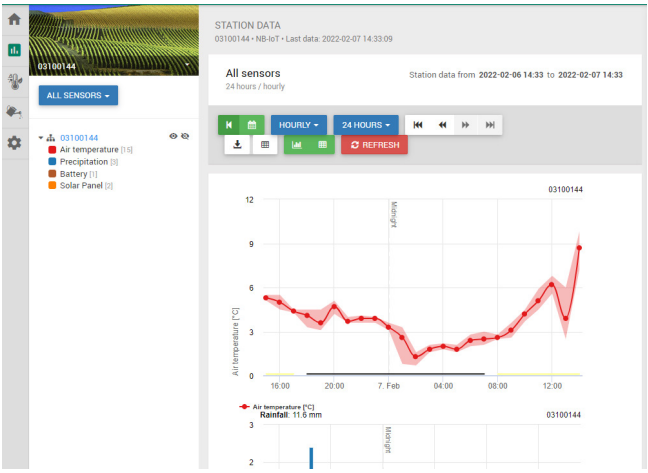

With the activation of licenses for high-precision localized weather forecast and plant disease models, it is possible to access all data of these additional services. To activate them, contact your local distributor or license@metos.at.

On the Station settings page you can configure your device.

Station settings > Sensors and nodes: You can define a custom name for your station and nodes connected to it. For convenient viewing of data, you can also rename each sensor and customize its color in the graph.

For further inquiries visit metos.at/fieldclimate-manual.

MAINTAINING YOUR µMETOS NB-IoT

The weather station should be checked periodically to ensure that sensors are in optimal condition. Regular maintenance is necessary for flawless operation and durability.

At the beginning of the new season, check that the station is working correctly; data must be transmitted at the set interval to FieldClimate. Keep the solar panel and sensors clean, especially the rain gauge.

Clean rain gauge ensures correct rainfall measurements. It also needs to be leveled by checking the bubble indicator and not obstructed by leaves, insects or debris that could prevent it from functioning properly. Check if the leaf wetness sensor has the appropriate filter paper intact and positioned correctly. When in doubt about the rainfall measurements, the first thing is to check the rain gauge for any debris.

When the solar panel of the µMETOS NB-IoT is exposed to the sun and gets enough sunlight it should constantly recharge the battery of the system.

Cleaning and maintenance

Video instruction:

https://bit.ly/3J9PmR8

For full user manual please visit:
https://bit.ly/35JH9Vo

Visit *metos.at/terms-of-use/* to view legal information for Pessl Instruments products and services.

TALGİL
Computing & Control Ltd.



DREAM 2

TALGIL
Computing & Control Ltd.

★★★ DREAM 2 ★★★

Proffesional internet enabled central controller for multiple irrigation heads

The **DREAM 2** is the next generation of central control irrigation systems. It allows combining various technologies to suit each project specific needs. It is an **Internet enabled controller** so the user can control everything from his **PC or Smartphone**.

The **DREAM 2** can handle **multiple irrigation heads** thus allowing the user to manage medium to very large projects with many irrigation lines using a single controller.

General Features:

Modular & Flexible Hardware:

- **Local outputs DC or AC** – Directly activating Solenoids and Electric Valves
- **Single cable 2W RTU** – Up to 10 km
- **Radio RTU** – Up to 5 km (Soon 10 km)
- **Ph/EC control** – Handles multiple fertilization injection units
- **Weather station** – Supplying data for irrigation by ET, Frost protection and Rain shutdown
- **Analog inputs** – Locally near the controller or remotely though the RTU (Both RF and 2W)

Irrigation:

- Hundreds of irrigation programs, irrigation heads and valves can be defined
- Water dosage by Time, Volume, Volume per area and ET
- Irrigation by days of the week or cycle of days
- Single cycle or pulse irrigation
- Start: by time, by condition, manually
- Each program allows irrigating single valves or sequences of valves or groups
- Main valve operation delayed, advanced, or together with the irrigation valves
- Can handle multiple water sources (Pump houses and water tanks)

Fertilization:

- Allows both Local and multiline (central) fertilization sites. Up to 6 fertilizers per site
- Fertilizer dosage modes:
  - Continuous - Time (h:m:s), Volume (Liters)
  - Concentration - L/m³, L/m:s, sec/min, m:s/L
  - Proportional - proportion calculated from amount of water and fertilizer
- Three stage fertigation: pre- watering, injection, post watering

Backflush:

- Allows both Local and multiline (central) filter sites.
- Flushing by time, by PD or by both
- Definable parameters: Flushing interval, Pre dwell time, Dwell time, Flushing time, PD delay
- Endless looping detection and prevention
- Accumulation of flushing cycles by time and by PD

Alarms:

- High flow, Low flow, Water leakage, Low pressure
- Fertilizer leakage, No pulses from fertilizer injector
- PD sensor failure
- Low battery, No AC

Communication:

- New PC software, Java based - **DREAM CONSOLE**. Simple to use, powerful and modern
- New Smartphone application – **DREAM SPOT**. From any device on any operating system
- Possible communication channels: **Netstick**, 3G modem, Ethernet cable, Radio, Cable
- Email alarm notifications

General:

- Multi language controller
- Large graphical LCD and full numeric keyboard
- Dealer definitions allows tailor fitting each controller to each user specific application
- Flexible condition systems allows starting, stopping, waiting and continuing of irrigation programs
- Detailed event log for all system events
- Controller configuration and irrigation programs are saved on non volatile memory

Energizing options:

- 12V DC from a solar panel and a rechargeable battery
- 220V / 110V AC

TALGIL COMPUTING & CONTROL LTD. P.O. B. 775 Kiryat Motzkin, 26119 ISRAEL TEL: +972-4-8775948 FAX: +972-4-8775949
Web: www.talgil.com E-mail: talgil33@netvision.net.il

TEROS 21 Soil Water Potential Sensor

When it comes to measuring water potential (or soil suction), it’s hard to find a sensor that meets your every need. You’re either forced to deal with lowered accuracy or high-maintenance hassles (plus getting soaked on cost). That's why we invented TEROS 21.



Broad soil applications. Dependable accuracy.

To say TEROS 21 is more accurate than competitor sensors doesn't do it justice. That's because unlike competitor models, we calibrate each and every sensor for you. To do this, we use a process that has been refined and perfected over the years that allows the TEROS 21 water potential sensor to come to a fixed water potential. The result: a long-term monitoring solution you can finally trust.

A true full-range water potential sensor that's low maintenance and low cost

The TEROS 21 water potential sensor is incredibly easy to use. It requires no maintenance, and it's accurate enough for most applications. In fact, the TEROS 21 provides an even more accurate soil moisture picture than measuring water content alone. A water content sensor only shows the percentage of water in the soil, but add a TEROS 21 water potential sensor, and you'll know if that water is available to plants and where it will move. Plus, unlike water content, matric potential isn't dependent on soil type, so you can compare moisture between different sites. Not only that, the TEROS 21 is surprisingly affordable, and the new Gen 2 version boasts an improved circuit, a more robust microprocessor, and an improved measurement range. It now measures all the way from near saturation to air dry (0 to −100,000 kPa) making it the world's first true full range water potential sensor.

TECHNICAL SPECIFICATIONS

Measurement Specifications

Water Potential

Range: 0 to −100,000 kPa (1.70 to 6.00 pF)

Resolution: 0 kPa

Accuracy: ±(10% of reading + 2 kPa) from −100 to −5 kPa

NOTE: TEROS 21 Gen 2 can read up to 0 kPa when on a wetting path. The air entry of the soil limits the performance of the sensor to 0 kPa on the drying curve.

NOTE: TEROS 21 is not well calibrated beyond -100 kPa. For more information on using the TEROS 21 beyond this range, see Section 3.3.3 in the user manual

Temperature

Range: -40.00 – 60.00 °C

Resolution: 0.10 °C

Accuracy: ±1.00 °C

Dielectric Measurement Frequency

70 MHz

Communication Specifications

Output

DDI serial or SDI-12 communication protocol

Data Logger Compatibility

Our ZL6, EM60, and Em50 data loggers or any data acquisition system capable of 3.6- to 15-VDC power and serial or SDI-12 communication

Physical Specifications

Dimensions

Length: 9.6 cm (3.8 in)

Width: 3.5 cm (1.4 in)

Height: 1.5 cm (0.6 in)

Sensor Diameter

3.2 cm (1.3 in)

Operating Temperature Range

Minimum: -40.00 °C

Maximum: 60.00 °C

NOTE: Sensors may be used at higher temperatures under certain conditions; contact Customer Support for assistance.

Cable Length
5 m (standard)
75 m (maximum custom cable length)

NOTE: Contact Customer Support if a nonstandard cable length is needed.

Connector Types
3.5-mm stereo plug connector or stripped and tinned wires

Electrical and Timing Characteristics

Supply Voltage (VCC to GND)
Minimum: 3.6 VDC

Maximum: 15.0 VDC

Digital Input Voltage (Logic High)
Minimum: 2.8 V

Typical: 3.6 V

Maximum: 5.0 V

Digital Input Voltage (Logic Low)
Minimum: -0.3 V

Typical: 0.0 V

Maximum: 0.8 V

Power Line Slew Rate
Minimum: 1.0 V/ms

Current Drain (During Measurement)
Minimum: 3.0 mA

Typical: 5.0 mA

Maximum: 16.0 mA

Current Drain (While Asleep)
Minimum: 0.0 mA

Power Up Time (DDI Serial)
Maximum: 50 ms

Power Up Time (SDI-12)
Typical: 175 ms

Measurement Duration
Typical: 175 ms

Diameter Dendrometer
Type DD-S

Technical Specifications

ECOMATIK GmbH
Muenchner Str. 23
D-85221 Dachau/Germany
Tel.: +49 8131 260 738
Fax: +49 8131 260 736
e-mail: info@ecomatik.de
website: www.ecomatik.de


DD-S1


DD-S2


DD-S2


DD-S2W

Name of the Sensor	**Diameter dendrometer small** **Type DD-S1 (former name DD-S)**	**Type DD-S2 & DD-S2W (encapsulated)**
Use area	slow/normal growing, woody and herbaceous species standard mounting frame	fast, toolless installation
Suitable for plant size	Diameter 0-5 cm	
Range of the senor	11 mm	
Resolution	The resolution of the sensor itself is infinite. The resolution of readings is determined by connected data logger, e.g.: CR1000 (differential w/i): 1.5 µm Dendrometer logger DL18: 0.2 µm	
Accuracy	Dendrometer dependent: max. ±4.5% of reading (stable offset) Logger dependent, e.g.: CR1000: ± (0.04% of reading +4.4 µm) Dendrometer logger DL18: ±0.1%	
Temperature coeffi-cient of the sensor	< 0.2 µm / °C in the whole range	
Linearity	<1%	
Environment	Outdoor condition: -25 to 70°C air temperature, 0 to 100% relative humidity	
Weight of the sensor	13 g without cable	15 g without cable
Power supply	Stabilized Vex of 0.5 – 10 VDC, power consumption practically zero	
Material	Stainless steel and Aluminium	
Cable length	5 m, extendable up to 100 m	

Data samples of dendrometers

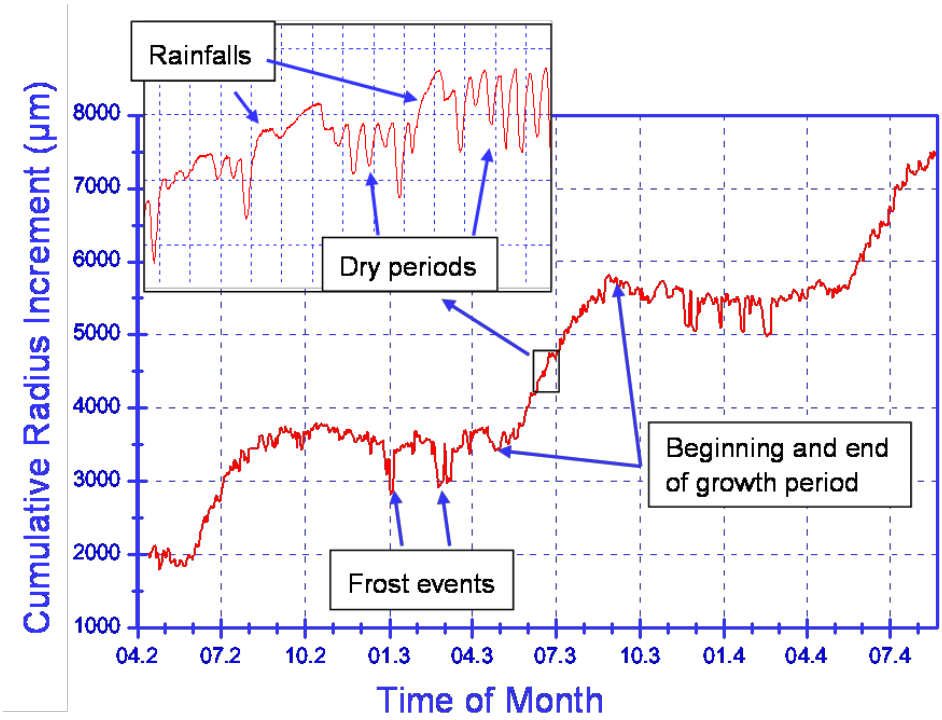

Fig. 1 Growth curve of a spruce tree

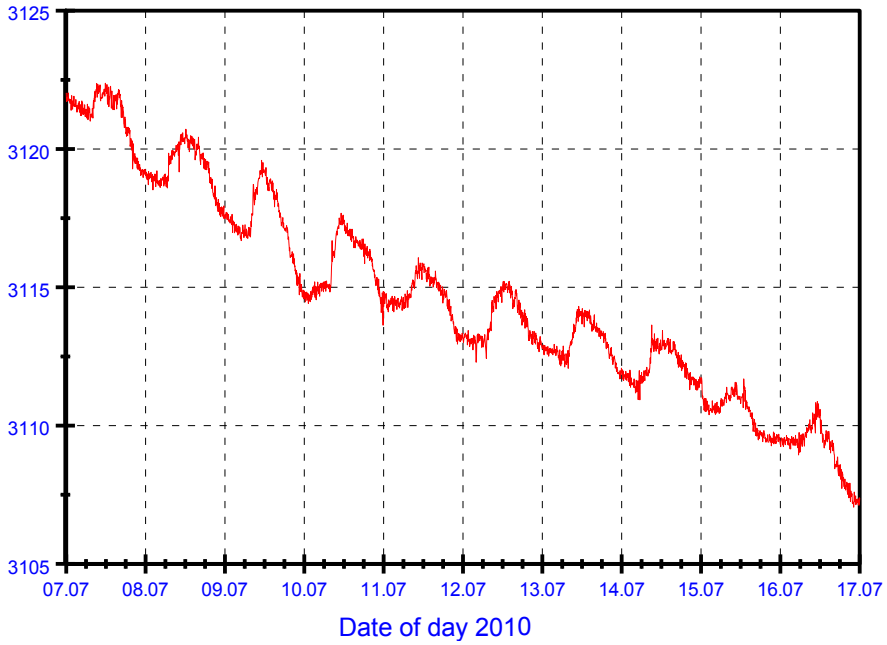

Growth Curve of a wheat measured with a DD-S dendrometer
in the dry July days of 2010 in Germany

JUMO

MORE THAN SENSORS AND AUTOMATION

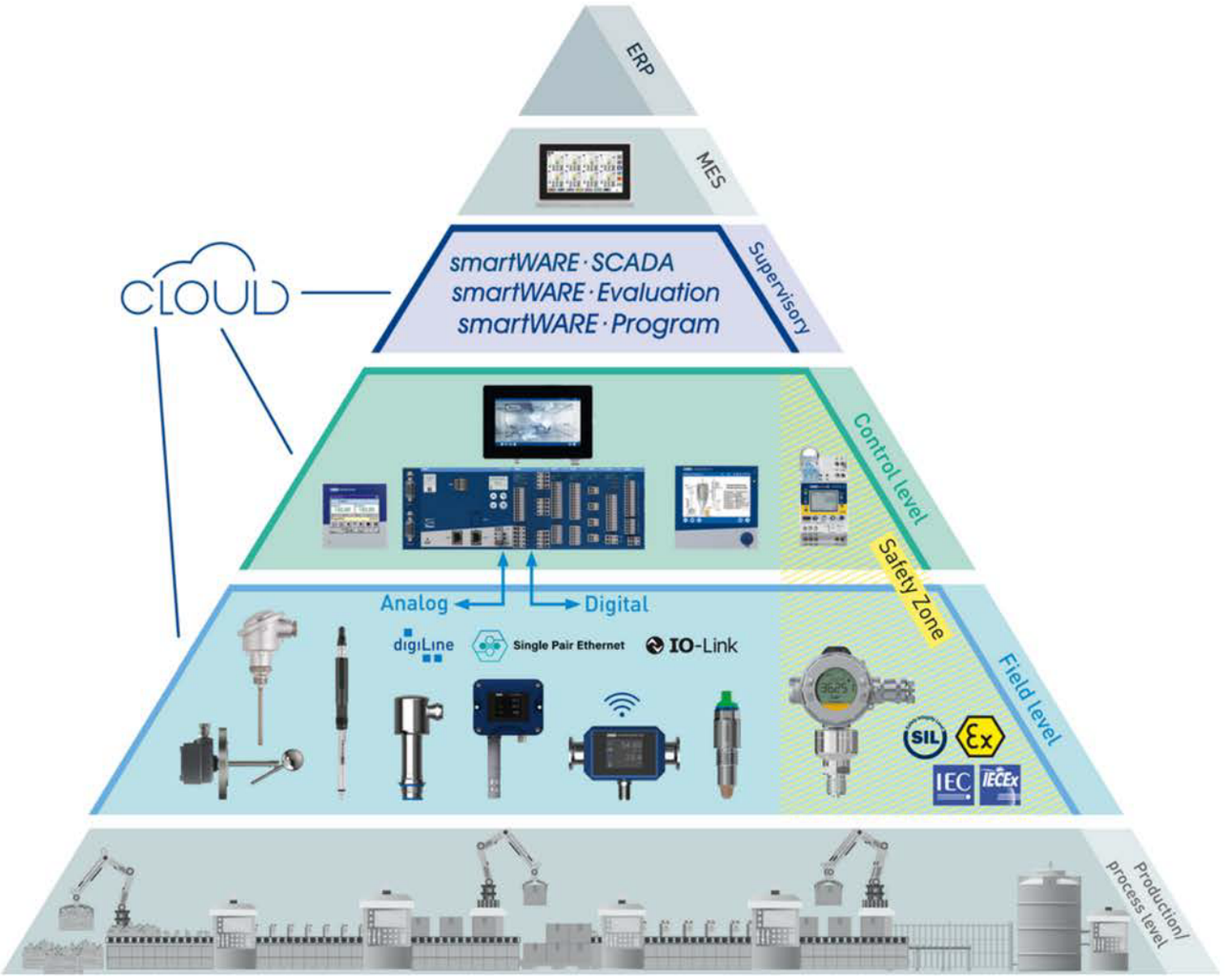

2024 Stock Catalog USA



JUMO Process Control, Inc.
6724 Joy Road
East Syracuse, NY 13057
Tel: (315) 437-5866
info.us@jumo.net
www.jumousa.com

Warehouse - Service

This stock catalog lists the products we have in our US warehouse in stock and ready to ship, but our full product selection is vast. If you don't see exactly what you are looking for, you can visit our website, call, or email us. We would be happy to help you find the right product. Many more products are available as stock items at JUMO headquarters in Germany, or we can work with you to build the right custom product for your particular application. We have a long history of success partnering with OEM manufacturers to supply custom components. Prices are valid through 2024.
You can view and download our terms and conditions online:
www.jumousa.com/en_US/about-us/generalterms.html

Delivery Time:
These devices are readily available from stock. However, we reserve the right to sell individual warehouse items in the meantime. In such cases, we'll provide you with an order confirmation, including a delivery date. If your order includes devices from multiple delivery groups, we'll consolidate delivery unless you specify otherwise.

Shipping:
Shipping: Shipments are typically sent via UPS Ground unless otherwise specified by the customer on their order. Alternative delivery methods are implemented only upon specific request in your order.

Pricing:
Our prices are in USD $. For further details, please review our general "Terms and Conditions". Prices are subject to change.

Take advantage of our product and application training at our facility.

All data sheets and operating instructions are accessible at www.jumousa.com.

JUMO Process Control, Inc
6724 Joy Road
East Syracuse, NY 13057
Phone: (315) 437-5866
Email: info.us@jumo.net
www.jumousa.com

Reach us by phone or email:
Mon to Thurs 08:00 AM to 5:00 PM Eastern Time and
Fri 08:00 AM to 02:30 PM Eastern Time.

TABLE OF CONTENTS

05 Temperature Probes

09 Thermostats

10 Transmitters

11 Controllers

15 Safety Limiters

16 Chart Recorders

17 Pressure Transmitter

19 Conductivity

20 Liquid Analysis

23 General Terms and Conditions

25 Return Material Authorization "RMA" Terms and Conditions

Thermocouples according to EN 60 584

Element	Maximum temperature	Defined to	Color coding
Fe-CuNi "J"	750°C	1200°C	+ sw - ws
Cu-CuNi "T"	350°C	400°C	+ bn - ws
NiCr-Ni "K"	1200°C	1370°C	+ gn - ws
NiCr-CuNi "E"	900°C	1000°C	+ vt - ws
NiCrSi-NiSi "N"	1200°C	1300°C	+ vt - ws
Pt10Rh-Pt "S"	1600°C	1540°C	+ or - ws
Pt13Rh-Pt "R"	1600°C	1760°C	+ or - ws
Pt30Rh-Pt6Rh "B"	1700°C	1820°C	+ gr - ws

Thermocouples according to DIN 43 710

Fe-CuNi "L"	700°C*	900°C	+ rd - bl
Cu-CuNi "U"	400°C*	600°C	+ rd - bn

*Constant temperature in pure air

Tolerance classes (according to DIN EN 60751)

class	Sensor category	Temperature range	Tolerance in K
AA	Thin film F0,1 Wire W0,1	0 to +150°C -50 to +250°C	± (0.10 K + 0.0017 x |t|)
A	Thin film F0,15 Wire W0,15	-30 to +300°C -100 to +450°C	± (0.15 K + 0.002 x |t|)
B	Thin film F0,3 Wire W0,3	-50 to +500°C -196 to +600°C	± (0.30 K + 0.005 x |t|)
C	Thin film F0,6 Wire W0,6	-50 to +600°C -196 to +600°C	± (0.60 K + 0.01 x |t|)

Speed

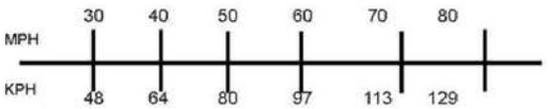

Temperature

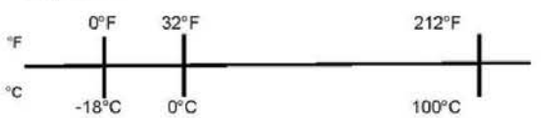

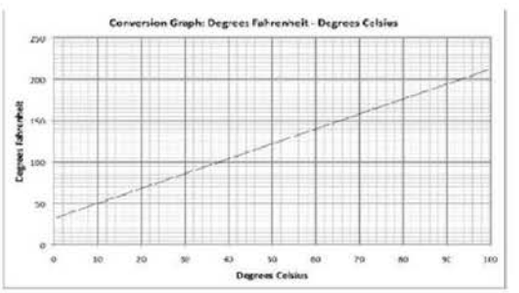

Conversion table

Length

1 in	= 25.4 mm	1 cm	= 0.3937 in
1 ft = 12 in	= 304.8 mm	1 cm	= 0.0328 ft
1 yard = 3 ft	= 914.4 mm	1 m	= 1.0936 yd
1 mile (statue)	= 1.609 km	1 km	= 0.6214 mile (statue)
1 mile (nautical)	= 1.853 km	1 km	= 0.54 mile (nautical)

Area

1 in²	= 6.4516 cm²	1 cm²	= 0.1550 in²
1 ft² = 144 in²	= 0.0929 m²	1 m²	= 10.7639 ft²
1 yd² = 9 ft²	= 0.8361 m²	1 m²	= 1.19599 yd²
1 acre = 4840 yd²	= 0.4047 ha	1 a	= 0.0247 acre = 119.6 yd²
1 mile²	= 2.5900 km²	1 km²	= 0.387 mile²

Volume

1 in³	= 16.387 cm³	1 cm³	= 0.06102 in³
1 ft³ = 1728 in³	= 0.0283 m³	1 m³	= 35.3156 ft³
1 yd³	= 0.7646 m³	1 m³	= 1.30795 yd³
1 US gal	= 3.7854 l	1 l	= 0.2642 US gal
1 US gal	= 0.8327 UK gal		
1 register ton	= 2.8317 m³	1 m³	= 03531 reg. ton

Mass

1 oz (ounce)	= 28.35 g	1 g	= 0.0353 oz
1 lb (pound)	= 0.45359 kg	1 kg	= 2.205 lb
1 ton (short)	= 907.185 kg	1 to	= 1.102 ton short
1 ton (long)	= 1.01605 to	1 to	= 0.984 ton long

Density

1 lb/in³	= 27.68 g/cm³	1 g/cm³	= 0.362 lb/in³
1 lb/ft³	= 0.16 g/cm³	1 g/cm³	= 62.4 lb/ft³
1 lb/imp.gal.	= 0.09978 g/cm³	1 g/cm³	= 10.022 lb/ig
1 lb/US gal.	= 0.1198 g/cm³	1 g/cm³	= 8.35 lb/USg

Force

1 gr. weight (wt.)	= 0.0648 p	1 p	= 15.4 gr.wt.
1 pound weight (lbf)	= 0.4536 kp	1 kp	= 2.204 lbf
1 poundal (pdl.)	= 0.0141 kp	1 kp	= 70.937 pdl
1 ton weight short	= 0.907185 Mp	1 Mp	= 1.1023 ton wt.sht
1 ton weight long	= 1.016 Mp	1 Mp	= 0.984 ton wt. long

Pressure

1 lbf/ft²	=0.0049 kp/cm²	1 kp/cm²	= 2048 lb/ft²
1 lbf/in²	= 0.070307 kp/cm²	1 kp/cm²	= 14.223 lbf/in²
1 in of water	= 0.002539 kp/cm²	1 kp/cm²	= 394 in of water
1 in of mercury	= 0.03453 kp/cm²	1 kp/cm²	= 28.96 in of merc.
1 kips = 1000 psi	= 70.3 kp/cm²		

Speed

1 ft/sec	= 1.0973 km/h	1 km/h	= 0.911327 ft/sec
1 ft/min	= 0.0183 km/h	1 km/h	= 54.681 ft/min
1 mile/h	= 1.6093 km/h	1 km/h	= 0.621388 mile/h

Pt100 characteristic curve

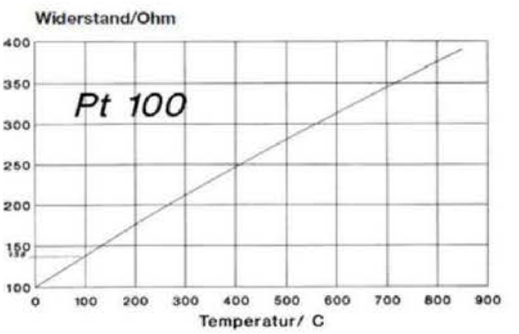

Pressure unit conversion table

	bar	mbar	Pa (N/m²)	kPa (kN/m²)	torr mmHg (0°C)	mWS (4°C)	at kp/cm²	inch Hg (0°C)	inch H2O (4°C)	PSI lb/inch²	atm
bar	1	1000	100000	100	750.062	10.1972	1.01972	29.53	401.463	14.5038	0.986923
mbar	0.001	1	100	0.1	0.750062	0.0101972	0.00101972	0.02953	0.401463	0.014504	0.000986923
Pa (N/m²)	0.00001	0.01	1	0.001	0.007501		1.01972 x 10-5	0.0002953	0.004015	0.000145038	9.86923 x 106
kPa (kN/m²)	0.01	10	1000	1	7.501	0.10197	0.010197	0.2953	4.015	0.145038	0.00986923
torr mmHg (0°C)	0.00133322	1.33322	133.322	0.133322	1	0.0135951	0.00135951	0.03937	0.53524	0.019337	0.00131579
mWs (4°C)	0.098067	98.0665	9806.65	9.80665	73.5559	1	0.1	2.8959	39.3701	1.42233	0.096784
at kp/cm²	0.980665	980.665	98066.5	98.0665	735.559	10	1	28.959	393.701	14.2233	0.967841
inch Hg (0°C)	0.033864	33.8639	3386	3.386	25.4	0.345316	0.034532	1	13.5951	0.491154	0.033421
inch H2O (4°C)	0.00249089	2.49089	249.089	0.249089	1.86832	0.0254	0.00254	0.073556	1	0.03613	0.002458
PSI lb/inch²	0.06895	68.9476	6894.76	6.89476	51.7149	0.70307	0.070307	2.03602	27.68	1	0.068046
atm	1.01325	101325	1013.25	101.325	760	10.3323	1.03323	29.921	406.78	14.6959	1

JUMO Mineral-Insulated Thermocouples with Compensating Cable

According to DIN 43710 and DIN EN 60584 (901210)

Features
- For temperatures between -328 and 2192 °F (-200 and 1200 °C)
- Flexible sheath cable with vibration-resistant measuring insert
- Protection tube diameter: 1.5 mm
- Quick response time
- Application-specific insertion length



Part number	Operating temperature	Measuring Insert	Diameter	Fitting length	Cable length	Price
00445812	-328 to 2192 °F (-200 to 1200 °C)	1 x NiCr-Ni "K"	1.5 mm	190 mm	3000 mm	$68.52

JUMO Screw-in RTD Temperature Probe

with form B terminal head (902020)

Features
- For temperatures between -58 and 752 °F (-50 and 400 °C)
- With interchangeable measuring insert
- As single or double RTD temperature probe
- Available with transmitter
- Protection type IP65



Part number	Class	Operating temperature	Measuring insert	Diameter	Fitting length	Process connection	Price
00329928	B	-58 to 752 °F (-50 to 400 °C)	2 x Pt 100 (2-wire)	9mm	100 mm	Thread G 1/2	$206.95
00439161	B	-58 to 752 °F (-50 to 400 °C)	1 x Pt 100 (3-wire)	9mm	160 mm	Thread 1/2-14 NPT	$193.99

JUMO Screw-in RTD Temperature Probe

with form J terminal head (902030)

Features
- For temperatures between -58 and 752 °F (-50 and 400 °C)
- As single or double RTD temperature probe
- Protection type IP65



Part number	Operating temperature	Measuring insert	Diameter	Fitting length	Process connection	Price
00055692	-58 to 752 °F (-50 to 400 °C)	1 x Pt 100 (2-wire)	6 mm	50 mm	Thread G 1/2	$119.93
00055693	-58 to 752 °F (-50 to 400 °C)	1 x Pt 100 (2-wire)	6 mm	100 mm	Thread G 1/2	$119.15
00055694	-58 to 752 °F (-50 to 400 °C)	1 x Pt 100 (2-wire)	6 mm	150 mm	Thread G 1/2	$122.48
00383011	-58 to 752 °F (-50 to 400 °C)	1 x Pt 100 (2-wire)	6 mm	50 mm	Thread G 1/2	$153.59

Temperature Probes

JUMO Screw-in RTD Temperature Probe

with connecting cable (902050)



Features
- For measuring temperatures in liquids and gases
- For temperatures from -58 to 572 °F (-50 to 300°C)
- Ability to form reliable seals for vacuum and high pressure applications
- Single RTD temperature probe in 2-wire circuit
- Shielded connecting cable is bend-protected

Part number	Cable shielding	Process connection	Operating temperature	Measuring insert	Diameter	Fitting length	Cable length	Price
00055722	Shielded connecting cable	Thread M8 (x1.25)	-58 to 572 °F (-50 to 300 °C)	1 x Pt 100 2-wire	8 mm	25 mm	2500 mm	$125.16

JUMO Push-In RTD Temperature Probe

with connecting cable (902150)



Features
- For temperatures between -58 to 356 °F (-50 to 180°C)
- Single RTD temperature probe in 2-wire circuit
- Connecting cable made of silicone or PTFE

Part number	Model	Operating temperature	Measuring insert	Diameter	Fitting length	Cable end	Cable length	Price
00389771	Push-in RTD with connecting cable, one piece protection tube in SS	-58 to 356 °F (-50 to 180 °C) Silicone cable	1 x Pt 100 2-wire	6 mm	50 mm	Ferrules	2500 mm	$51.04
00589437	Push-in RTD with connecting cable, multi-part protection tube (welded) in SS	-58 to 356 °F (-50 to 180 °C) Silicone cable	1 x Pt 100 2-wire	6.4 mm	152.4 mm	Ferrules	2500 mm	$64.31
00589459	Push-in RTD with connecting cable, one piece protection tube in SS	-58 to 356 °F (-50 to 180 °C) Silicone cable	1 x Pt 100 2-wire	6 mm	50 mm	Tin plated cable ends	2000 mm	$45.32
00589505	Push-in RTD with connecting cable, multi-part protection tube (welded) in SS	-58 to 356 °F (-50 to 180 °C) Silicone cable	1 x Pt 100 2-wire	6.4 mm	51 mm	Bare cable ends	2000 mm	$54.48
00642527	Push-in RTD with connecting cable	-58 to 500 °F (-50 to 260 °C) PTFE	1 x Pt 100 2-wire	4.8 mm	76 mm	Contact pin 6.3	1000 mm	$88.22

JUMO Mineral-Insulated RTD Temperature Probes

with connecting cable according to DIN EN 60751 (902210)



Features
- Flexible sheath cable with vibration-resistant measuring insert
- Sheath contains low-ohmic copper conductor wires embedded in compressed, heat-resistant magnesium oxide
- For temperatures between -58 and 1112 °F (-50 and 600 °C)
- Quick response time

Part number	Operating temperature	Measuring insert	Diameter	Fitting length	Cable length	Price
00055763	-58° to 1112 °F (-50 to 600 °C)	1 x Pt 100 2-wire	3 mm	300 mm	2500 mm	$115.49
00068243	-58° to 1112 °F (-50 to 600 °C)	1 x Pt 100 2-wire	3 mm	100 mm	2500 mm	$110.38

JUMO FOODtemp

Insertion RTD temperature probe (902350)

Features
- For temperatures between -58 to 500 °F (-50 to 260 °C)
- Steam tight and pressure resistant
- High mechanical strength
- In 3-wire circuit
- Available with multiple measuring points





Part number	Model	Operating temperature	Measuring insert	Diameter	Fitting length	Insertion tip	Cable length	Connecting cable specs	Price
00083792	RTD insertion temperature probe with PPS plastic handle Ø 20 mm and PTFE cable	-58 to 392 °F -50 to 200 °C	1 x Pt 100 3-wire	4 mm	100 mm	Centric, angle 25°	4000 mm		$287.28
00089569	RTD insertion temperature probe with PPS plastic handle Ø 20 mm and PTFE cable	-58 to 392 °F -50 to 200 °C	2 x Pt 100 3-wire	4 mm	100 mm	Centric, angle 25°	4000 mm		$325.71
00325266	RTD insertion temperature probe with PTFE handle Ø 15 mm and PTFE cable	-58 to 392 °F -50 to 200 °C	2 x Pt 100 3-wire	4.5 mm	100 mm	Bevel, angle 45°	4000 mm		$398.53
00328395	RTD insertion temperature probe with PTFE handle Ø 15 mm and PTFE cable	-58 to 500 °F -50 to 260 °C	1 x Pt 100 3-wire	4 mm	150 mm	Centric, angle 25°	4000 mm	Shielded	$348.83
00333089	RTD insertion temperature probe with PTFE handle Ø 15 mm and PTFE cable	-58 to 500 °F -50 to 260 °C	1 x Pt 100 3-wire	4 mm	100 mm	Centric, angle 25°	4000 mm		$389.40
00338153	RTD insertion temperature probe with silicone handle Ø 10 mm and silicone cable	-58 to 500 °F -50 to 260 °C	1 x Pt 100 3-wire	4 mm	100 mm	Centric, angle 25°	4000 mm	Shielded	$180.04
00369207	Miniature RTD insertion temperature probe with FPM handle Ø 6.5 mm and shielded PTFE cable	-58 to 392 °F -50 to 200 °C	1 x Pt 100 3-wire	Ø 4 mm stepped down to Ø 2.5 mm	80 mm	Centric, angle 25°	4000 mm	Shielded	$228.29
00412785	RTD insertion temperature probe with PPS plastic handle Ø 20 mm and PTFE cable	-58 to 392 °F -50 to 200 °C	1 x Pt 100 3-wire	4 mm	150 mm	Centric, angle 25°	4000 mm		$259.09
00475199	RTD insertion temperature probe with silicone handle Ø 10 mm and PTFE cable	-58 to 392 °F -50 to 200 °C	1 x Pt 100 3-wire	4.5 mm	150 mm	Centric, angle 25°	8000 mm	Shielded	$248.65
00523228	RTD insertion temperature probe with PEEK handle and PTFE cable	-58 to 500 °F -50 to 260 °C	1 x Pt 100 3-wire	4 mm	100 mm	Bevel, angle 25°	4000 mm		$240.21
00585550	RTD insertion temperature probe with PEEK handle and PTFE cable	-58 to 500 °F -50 to 260 °C	1 x Pt 100 3-wire	Ø 4 mm stepped down to Ø 2.5 mm	100 mm	Centric, angle 25°	4000 mm		$256.76

Temperature Probes

JUMO Surface RTD Temperature Probe

with connecting cable (902550)



Features
- For temperatures from -58 to 500 °F (-50 to 260 °C)
- Aluminum protection fittings
- Simple and quick installation
- Low thermal mass
- Used for measuring temperatures on closed pipe systems and / or other round or level surfaces

Part number	Operating temperature	Measuring insert	Class	Connecting cable ends	Cable length	Price
00306774	-58 to 500 °F (-50 to 260 °C)	1x Pt 100 (2-wire)	B	Ferrules	2500 mm	$90.83

JUMO STEAMtemp Push-in RTD Temperature Probe

in steam tight version (902830)



Features
- For temperatures between -58 to 302 °F (-50 to 150 °C)
- As single or double RTD temperature probe
- Preferred choice for measuring in sterilizers and other applications in a pressurized atmosphere containing steam, such as laboratory equipment

Part number	Operating temperature	Measuring insert	Diameter	Class	Fitting length	Cable length	Price
00374486	-58 to 302 °F (-50 to 150 °C) PTFE connecting cable	2 x Pt 100 (3-wire)	6 mm	A	200 mm	5000 mm	$166.54
00446561	-58 to 302 °F (-50 to 150 °C) PTFE connecting cable	1 x Pt 100 (3-wire)	6 mm	A	200 mm	5000 mm	$165.22

JUMO Wtrans T

RTD Temperature Probe with Wireless Data Transmission (902930)



Features
- Measuring ranges: -22 to +500 °F or -328 to +1112 °F
- Radio frequency: 868.4 MHz or 915 MHz
- Also available with ATEX approval *ATEX only comes in 868MHz
- Open air range up to 300 m
- Wiring expenses are eliminated with modern wireless technology
- Fail-safe transmission with telegram coding
- Battery status monitoring
- Configurable with easy-to-use PC setup program

Part number	Operating temperature	Measuring insert	Transmit. frequency	Insertion length	Insertion tip	Price
00496833	-22...500°F (-30..260°C)	1x Pt1000 3-wire	915 MHz	100 mm	bevel, angle 45°	$523.37

PC Interface cable	Interface	Price
00534690	Battery-Set 3,6 V/1700 mAh Lithium (+125°C) EBD BATTERY ETS	$43.03
00456352	PC interface with converter USB/TTL	$236.76

JUMO wTRANS receiver

Universal Receiver for JUMO Wireless Measuring Probes (902931)



Features

- Universal receiver for JUMO wireless measuring probe
- In combination with corresponding transmitter for RTD temperature probes, thermocouples, resistance/potentiometer, voltage input, or pressure measurement
- Wiring expenses are eliminated with modern wireless technology
- For up to 16 transmitters per receiver (can be freely combined)
- RS485 interface with Modbus protocol
- Four analog outputs/up to two switching outputs (relay)
- Operation directly on device or by using setup program on PC
- Customer-specific linearization (40 value pairs or 4th order polynomial)

Part number	Basic type	ITransmitter frequency	Voltage supply	Price
00543032	Wtrans receiver T01.EC1 with wireless transmission of the measured values, 4 analog outputs	915 MHz	AC 110..240V +10/-15%,48..63Hz	$746.73

PC Interface cable	Interface	Price
00482648	Antenna wall bracket with opposite pole for Lambda/4-antenna	$27.20
00456352	Converter USB/TTL	$236.76

JUMO EM-Series

Panel mounted thermostats up to 572 °F (300 °C) (602021)



Features

- Liquid or gas expansion
- Self-monitoring in the event of a pressure drop
- Safety cut-out at -4 °F (-20 °C)
- Single-pole snap switches

Part number	Basic Type	Range	Capillary Length	Switch differential	Probe diameter	Price
60000211	EM-5 Temperature limiter, adjustable (TB), 1-pole	122 to 572 °F (50 to 300 °C)	1000 mm	2.5 %	6 mm	$205.62
60000494	EM-1 Temperature controller (TR), 1-pole	32 to 212 °F (0 to 100 °C)	1000 mm	2.5 %	6 mm	$166.10
60000495	EM-1 Temperature controller (TR), 1-pole	122 to 572 °F (50 to 300 °C)	1000 mm	2.5 %	6 mm	$192.53
60000923	EM-1 Temperature controller (TR), 1-pole	122 to 572 °F (50 to 300 °C)	2000 mm	2.5 %	6 mm	$203.06
60000924	EM-5 Temperature limiter, adjustable (TB), 1-pole	122 to 572 °F (50 to 300 °C)	1000 mm	2.5 %	6 mm	$179.18
60002717	EM-1 Temperature controller (TR), 1-pole	122 to 572 °F (50 to 300 °C)	1000 mm	2.5 %	8 mm	$166.10

JUMO dTRANS T03

2-wire / 3-wire transmitter (707030)

Features
- Designs for B head or DIN rail installation
- PT100 (2 or 3-wire connection)
- Analog measured value processing
- Smallest measuring range 25 kelvin
- Output: 2-wire 4 to 20 mA; 3-wire 0 to 10 V
- Adjustable / configurable version
- Measuring circuit monitoring NAMUR NE 43
- Fine adjustment / configuration via setup program





Part number	Input	Output	Range	Price
00394779	1 x Pt 100 (3-wire)	4 to 20 mA (2-wire)	32 to 212 °F (0 to 100 °C)	$84.29
00438518	1 x Pt 100 (3-wire)	4 to 20 mA (2-wire)	32 to 212 °F (0 to 100 °C)	$171.51

Part number	Interface	Price
00543032	PC Interface with Converter USB/SPI	$746.73

JUMO dTRANS T05

Programmable 2-wire transmitter (707050)

Measuring input for RTD temperature probe, thermocouple, resistor / potentiometer, resistance transmitter, and voltage

Features
- Input and output are galvanically isolated
- Control LED (red / green)
- Configuration directly via USB cable (mini B) without additional auxiliary voltage
- Customer-specific linearization
- Detection of the min./max. process value (drag indicator function including point in time)
- Option to specify the temperature in °F for temperature sensors



Part number	Input	Output	Range	Price
00582219	1 x Pt 100 (3-wire)	4 to 20 mA (2-wire)	32 to 212 °F (0 to 100 °C)	$165.73

JUMO dTRANS T06

Multifunctional Four-Wire Transmitter in Mounting Rail Case (707071)



Features
- Universal input for a large number of sensors and standard signals
- Intuitive operation and configuration on the device or through USB interface with setup program
- RS485 interface (Modbus RTU) and relay output limit value (option)
- Intelligent additional functions such as min./max. drag indicator, operating hours counter, and output simulation
- SIL 2/SIL 3 according to DIN EN 61508 and PL c/d according to DIN ISO 13849 (option)
- Sensor matching for RTD temperature probes

Part number	Version	Voltage supply	Range	Input 1	Output	Price
00694861	Standard with default settings	DC24V +10/-15 %	0...100	Pt100 3-wire	4..20 mA	$408.11

JUMO miroTRON refrigeration Kit

Electronic thermostat with optional PID two-state controller function (701080) + Push-in RTD temperature probe with connecting cable (902150)



Features
- Intuitive startup and operation for ease of use
- High degree of control quality with optional PID autotuning
- Integrated timer function for precise timing operations
- Service and operating hours counter for maintenance tracking
- Cost-effective solution ideal for simple control applications
- Shielded cable with optional bend protection
- Available in straight and angled variants for versatile installations
- Strain-relieved design for durability and longevity

Part number	Version	Voltage supply	Input 1	Output	Price
00786083	Standard with default settings	AC 115v +10/ -15%	RTD Pt100/pt1000	2 relays	$235.52

JUMO eTRON T100

Electronic Thermostat (701052)

Features
- 5 measuring input groups available
- User level with 8 parameters
- Dot matrix display 64 × 80 pixels with 4 national languages
- Data logger function
- Service and operating hours counter
- Connection via terminal blocks with PUSH IN technology
- 10 A relay (changeover contact)
- Customer-specific linearization in the setup program
- Limit value monitoring
- Timer function
- Meeting the standards and specifications for use in rail vehicles according to DIN EN 50155, DIN EN 50121, and DIN EN 45545



PC Interface cable	Interface	Input	Voltage Supply	Price
00702233	eTRON T100			$71.61
00718287	Standard with default settings	RTD temperature probes pt100, pt1000	AC 230 V +10/-15%, 48 to 63 Hz	$221.50

JUMO diraTRON

Compact Controller (702110/11/12/13/14)

Features
- Fixed value or program controller
- 2 parameter blocks
- Setpoint changeover (4 setpoint values)
- Ramp and timer function
- 4 limit value monitoring functions
- Individual operator level
- Separate application using structured text (ST code; option)
- Fast wiring through PUSH IN technology
- RS485 interface (option)



Part number	Format	Input	Output	Power Supply	Price
00680786	48x48 mm	1x analog input, 1x digital input	digital input	AC 110..240V +10/-15%,48..63Hz	$437.23
00680787	948x48 mm	1x analog input, 1x digital input	digital input	AC/DC 20..30V,48..63Hz	$437.23

Part number	Version	Software 1	Price
00678822	setup data	383.01.xx/1.03J	$188.05

JUMO dTRON 304 / 308 / 316

Compact controller with program function (703041)

Features
- 48 x 48, 48 × 96 mm, 96 x 48, 96 × 96 mm formats
- Universal analog measuring input, two programmable binary input
- 2-state / 3-state continuous controller, 3-step continuous controller
- Timer / ramp function
- Program with 8 sections
- Customizable function for math and logic
- 4 limit values are monitored
- Modbus interface, PROFIBUS-DP interface
- Standard configuration: 1x universal measuring input, 2 x binary inputs, 2 x relays, 2 x logic output
- Voltage supply for 2-wire transmitter (see data sheet)
- UL approval



Part number	Format	Input	Output	Power supply	Price
00441973	48 x 48 mm	2 x relay, 2 x logic-in/output 0 / 12V	1 x analog	AC/DC 110 to 240V +10 / -15 %, 48 to 63 Hz	$437.47
00441999	48 x 48 mm	2 x relay, 2 x logic-in/output 0 / 12V	1 x analog	AC/DC 110 to 240V +10 / -15 %, 48 to 63 Hz	$499.45
00442004	48 x 96 mm	2 x relay, 2 x logic-in/output 0 / 12V	1 x analog	AC/DC 110 to 240V +10 / -15 %, 48 to 63 Hz	$534.56
00442005	96 x 48 mm	2 x relay, 2 x logic-in/output 0 / 12V	1 x analog	AC/DC 110 to 240V +10 / -15 %, 48 to 63 Hz	$472.57
00442007	96 x 96 mm	2 x relay, 2 x logic-in/output 0 / 12V	1 x analog	AC/DC 110 to 240V +10 / -15 %, 48 to 63 Hz	$477.12
00475571	96 x 96 mm	2 x relay, 2 x logic-in/output 0 / 12V	1 x analog	AC/DC 20 to 30V 48 to 63Hz	$477.12

JUMO DICON touch

Two-Channel Process and Program Controller with Paperless Recorder and Touchscreen (703571)

Features
- Precise control of two PID processes
- Easy-to-use program generator control and program entry
- Interfaces: USB host, USB device, Modbus, PROFIBUS DP, PROFINET IO device, and Ethernet
- Process-data recording with tamper-proof data storage
- Individual process-screen display with configurable edit boxes
- Flexible through modular hardware
- Password-protected user management
- Five-digit analog-value display
- Control loop and output value monitoring
- Protection type IP66



Part number	Input	Version	Voltage Supply	Dimensions	Price
00607044	2x universal inputs, 2x relays	Standard with default settings	AC 110..240V +10/-15%,48..63Hz	96x96x130 mm	$1,509.47

Part number	Interface	Price
00606496	Setup/Programmeditor/Startup JUMO DICON touch Download 266.exe (30 days Test Version) (117.7 MB)	$386.14
00581177	Math and logic module	$295.62

Last Chance Controllers- Discontinued models
Only available until September 2024

JUMO IMAGO F3000

Process control for the meat processing industry (700101)



Features
- 5" color graphic display and LED display with height of 12 mm
- 8 universal measuring inputs
- 2-state / 3-state, three step controller, continuous controller
- 4 control channels
- F value, C value, delta T, core temperature
- Inputs / outputs can be expanded in a modular structure
- 99 programs with real-time clock
- Math and logic function
- Recording function
- Modbus interface, PROFIBUS-DP interface
- Self-optimization
- Plug and Play memory
- Configurable via keypad or setup program
- UL approval

Part number	Input	Version	Voltage Supply	Dimensions	Price
00439671	4 analog / 5 logic inputs totally configurable	Standard with default settings	AC 110..240V +10/-15%,48..63Hz	332x165mm	$9,485.42
PC Interface cable	Input				Price
00301315	PC interface with converter RS232/TTL				$121.02
00456352	PC interface with converter USB/TTL				$236.76

JUMO IMAGO 500

Multichannel process controller and program controller (703590)

Features
- 144 × 130 mm format (installation dimensions 92 × 92 mm)
- 5" color graphic display
- 2-state controller, 3-state controller, 3-step controller, position controller, continuous controller
- Control of C-level, differential, ratio, and humidity
- Up to 8 control channels (4 cascade controllers)
- Inputs / outputs have modular extensibility
- Extendable by 2 relay modules (8 relays each)
- Modbus interface, PROFIBUS-DP interface
- Freely configurable screen masks
- 50 programs with 100 segments and real time clock
- 16 control contacts
- Math and logic functions
- 16 limit values are monitored
- Recording function
- Teleservice through external modem
- Configuration with setup program
- UL approval



Part number	Input	Output	Power Supply	Math and logic	Price
00458766	Universal x 3	5 x 2 relay (make contacts)	AC 110 to 240 V +10 / -15 % 48 to 63Hz	Math and Logic module formula 1-8	$3,126.62
PC Interface cable	Input				Price
00301315	PC interface with converter RS232/TTL				$121.02
00456352	PC interface with converter USB/TTL				$236.76

JUMO safetyM STB/STW Ex

Safety Temperature Limiter/Monitor According to DIN EN 14597 and ATEX Approval (701150)



Features
- Ignition source monitoring according to EN 13463 IPL 2
- Temperature monitoring unit for monitoring potential ignition sources according to EN 50495 SIL 2
- Minimum pressure monitoring SIL 2
- Ignition protection type [Ex ia] with intrinsically safe inputs or [Ex e] with increased safety
- 1oo2D structure for a high degree of process reliability
- Security-related limit value relay (230 V, 3 A)
- Pre-alarm absolute or adjustable as a margin from the limit value
- Voltage supply range AC 110 to 240 V +10 %/-15 % or AC/DC 20 to 30 V
- Can be configured as safety temperature limiter (STB) or safety temperature monitor (STW)
- Approvals for DIN EN 14597, SIL, PL, ATEX, IECEx, PED
- Optional approval: DNVGL

Part number	Basic Type	Input	Output	Power Supply	Price
00548736	Safety temperature limiter	2x Pt100 3-wire	4..20mA analog	AC 110..240V +10/-15%,48..63Hz	$776.60
00548737	Safety temperature limiter	2x Pt100 3-wire	4..20mA analog	AC/DC 20..30V,48..63Hz	$776.60

PC Interface Cable	Interface	Price
00548742	Setup JUMO STB/STW 701150/55 Download 257.exe (30 days Test Version) (73.5 MB)	$83.06

JUMO safetyM TB / TW

Temperature limiter and temperature monitor (701160)



Features
- Design width 22.5 mm
- For installation on 35 mm DIN rail
- Approval according to DIN EN 14597, cULus
- Universal measuring input (including standard signal)
- 2 × Pt100 for differential measurement
- Alphanumeric LCD display
- Configurable limiter or monitor
- Temperature monitoring up to 4523 °F (2495 °C)
- Pre-alarm absolute or as a margin from the limit value
- Internal and external unlocking possible
- Configuration with setup program
- UL approval

Part number	Basic Type	Input	Power Supply	Price
00506382	Temperature limiter (inverse)	Pt 100 (3-wire)	AC 110 to 240V +10 / -15 %, 48 to 63Hz	$474.50

PC Interface cable	Interface	Price
00301315	PC interface with converter RS232/TTL	$121.02
00456352	PC interface with converter USB/TTL	$236.76

JUMO LOGOSCREEN 601

Paperless Recorder with Touchscreen (706521)



Features
- 144 × 144 mm format
- 14.5 cm (5.7") TFT color graphics screen (640 × 480 pixel)
- 3 or 6 universal measurement inputs (optional)
- Up to 24 digital inputs (optional)
- 12 digital inputs and outputs (optional)
- 24 external digital and analog inputs via interface
- Up to 2 analog outputs
- Up to 6 customer-specific process screens
- Intuitive touch operation
- PROFINET IO device interface (extra code)
- Integrated web server for online visualization same as on device
- Batch report recording
- Limit value monitoring function (24 channels)
- Flow measurement (2 channels, optional)
- 2 counter inputs (up to 12.5 kHz, optional)
- Paperless recording of analog and digital process data

Part number	Type	Power Supply	Option 1	Option 2	Price
00727738	With software packet	AC 110..240V +10/-15%,48..63Hz	3 analog, 6 digital inp., 1 analog outp.	3 analog, 6 digital inp., 1 analog outp.	$2,716.24

JUMO LOGOSCREEN 700

Highly-Scalable Paperless Recorder (706530)



Features
- Intuitive touch operation
- Up to 3 analog outputs
- Up to 10 customer-specific process screens
- PROFINET IO device interface (extra code)
- Integrated web server for online visualization same as on device
- Recording of up to 5 batch reports
- Up to 500 individual texts
- Limit value monitoring function (120 channels)
- Flow measurement (up to 8 channels)
- Up to 8 counter inputs (max. 12.5 kHz)
- User-specific application using structured text (ST code; extra code)
- Automatic data readout via PCA Communication Software PCC
- Data recording compliant with FDA 21 CFR Part 11 (extra code)
- Manipulation detection with digital certificate (extra code)
- AMS2750/CQI-9 (extra code)

Part number	Type	Power Supply	Option 1	Option 2	Price
00725552	1x Ethernet, 2x USB (1x RS232/485 interface	AC 110..240V +10/-15%,48..63Hz	Analog: 6 analog inputs	Analog: 6 analog inputs	$3,950.19

JUMO MIDAS Series

Pressure transmitters – universal application (401001)



Features
- Measuring range up to 0 to 1000 psi relative
- Elastomer sealed
- Compact design
- High chemical resistance
- Membrane withstands high mechanical load

Part number	Range	Output	Process connection 1/4	Material	Power supply	Seal	Price
43011693	0 to 25 psi relative	4 to 20mA (2-wire)	– 18 NPT to EN 837	CrNi (Stainless steel)	DC 10 to 30V	FPM	$244.23
43008814	0 to 50 psi relative	4 to 20mA (2-wire)	1/4 – 18 NPT to EN 837	CrNi (Stainless steel)	DC 10 to 30V	FPM	$244.23
43011696	0 to 60 psi relative	4 to 20mA (2-wire)	1/4 – 18 NPT to EN 837	CrNi (Stainless steel)	DC 10 to 30V	FPM	$244.23
43006736	0 to 100 psi relative	4 to 20mA (2-wire)	1/4 – 18 NPT to EN 837	CrNi (Stainless steel)	DC 10 to 30V	FPM	$244.23
43008815	0 to 150 psi relative	4 to 20mA (2-wire)	1/4 – 18 NPT to EN 837	CrNi (Stainless steel)	DC 10 to 30V	FPM	$244.23
43008816	0 to 200 psi relative	4 to 20mA (2-wire)	1/4 – 18 NPT to EN 837	CrNi (Stainless steel)	DC 10 to 30V	FPM	$244.23
43010669	0 to 250 psi relative	4 to 20mA (2-wire)	1/4 – 18 NPT to EN 837	CrNi (Stainless steel)	DC 10 to 30V	FPM	$244.23
43008817	0 to 300 psi relative	4 to 20mA (2-wire)	1/4 – 18 NPT to EN 837	CrNi (Stainless steel)	DC 10 to 30V	FPM	$244.23
43008818	0 to 500 psi relative	4 to 20mA (2-wire)	1/4 – 18 NPT to EN 837	CrNi (Stainless steel)	DC 10 to 30V	FPM	$244.23
43008819	0 to 1000 psi relative	4 to 20mA (2-wire)	1/4 – 18 NPT to EN 837	CrNi (Stainless steel)	DC 10 to 30V	FPM	$244.23

JUMO dTRANS p20

Process pressure transmitter with display (403025)



Features
- HART® interface
- Optional explosion protection Ex ia according to ATEX, INMETRO, GOST-R
- Linearity: 0.05 %
- Turn down: 1:50
- Simple operation with rotary knob
- Stainless steel housing
- Setup program
- LCD display with bar graph
- Display scaling with a choice of measuring units
- Display of sensor temperature
- Display of minimum and maximum pressures

Part number	Range	Output	Process connection	Material	Power supply	Price
00560711	0 to 4 bar absolute	4 to 20mA (2-wire)	1/2 – 14 NPT	CrNi (stainless steel)	DC 11.5 to 36V	$1,025.56

JUMO MIDAS C08

OEM basic pressure transmitter (401002)

Features
- Measuring range: 0 to 10 bar relative
- Elastomer sealed
- Compact design
- Long-term stability: < 0.2 %
- New level of quality for the OEM sector
- 60 % quicker device installation with the QUICKON quick-clamp technology
- Temperature compensation range increased by 50 % to -4 to 212 °F (-20 to 100 °C)
- 2.5 times more vibration resistance than the industry standard



Part number	Range	Output	Process connection	Power supply	Material	Seal	Price
00546121	0 bar to 10 bar relative	4 to 20mA (2-wire)	G 1/4 DIN EN 837	DC 8 to 30V	CrNi (Stainless steel)	FPM	$220.39

JUMO MIDAS S05

OEM universal pressure transmitter (401010)

Features
- Successor model to MIDAS SI (type 401006)
- Measuring range: 0 to 2.5 bar relative pressure
- Silicon sensor with stainless steel separating diaphragm
- Welded measuring system
- Compact design



Part number	Range	Output	Process connection	Power supply	Material	Price
43012486	0 to 2.5 bar relative pressure	4 to 20mA (2-wire)	G 1/4 DIN EN 837	DC 10 to 30V	CrNi (Stainless steel)	$278.17

JUMO MIDAS DP10

OEM differential pressure transmitter (401050)

Features
- Measuring range: 0 to 600 mbar relative
- Silicon sensor with stainless steel separating diaphragm
- Medium: gaseous, liquid, or low-aggression
- Version with elastomer seal, optional welding
- Compact design
- Parts in contact with media: PBT plastic, option with full stainless steel
- Overload pressure up to 30 bar on one side



Part number	Range	Output	Process connection	Power supply	Material	Seal	Price
43011497	0 to 600 mbar relative	4 to 20mA (2-wire)	2 x G 1/8 DIN EN 837	DC 10 to 30V	PBT	FPM	$406.23

JUMO dTRANS pH 02 – Compact Multichannel Transmitter/Controller

for pH, redox, ammonia, standard signals, and temperature (202551)

Features
- Display visualization options: large numbers, bar graph or trend display
- Integrated calibration routines: 1, 2, and 3 points
- Math and logic module
- Calibration logbook
- Integrated washing timer to control the cleaning equipment
- 12 integrated user languages
- Setup program features convenient programming and system documentation
- RS422/RS485 interface (option)
- PROFIBUS-DP interface (option)
- Data logger with real-time clock (option)
- Electrode monitoring can be activated
- UL approval



Part number	Format Input	Output	Power supply	Price
00579766	96 x 48 mm2 x binary 1 x analog (compensation) 1 x main (pH, redox, ammonia)	2 relays 1 analog output	AC 110 to 240V +10 / -15 %, 48 to 63 Hz	$928.65

PC Interface cable	Interface	Price
00301315	PC interface with converter RS232/TTL	$121.02
00456352	PC interface with converter USB/TTL	$236.76

JUMO BlackLine CR-EC

Conductive 2-electrode conductivity sensor (202922)

Features
- Inexpensive, compact design with integrated Pt 100
- Can be screwed into pipelines with small nominal width
- Designed as coaxial measuring cell
- Can be used up to approximately 1000 µS/cm



Part number	Cell constant	Measuring insert	Process connection	Electrode material	Fitting length	Electrical connection	Connection cable length	Price
00441398	K = 0.10	1 x Pt100 (2-wire)	1/2 - 14 NPT	CrNi (stainless steel)	40 mm	Fixed cable	5000 mm	$185.11

JUMO ecoTRANS Lf 03 – Transmitter/Switching Device

for conductivity or resistivity and temperature (202732)



Features
- Displayed units µS/cm, mS/cm, kOhm x cm, MOhm x cm, µmho/cm, mmho/cm
- Two current value outputs for conductivity and process temperature
- Switching output
- USP switching function as per USP<645>
- Selectable temperature compensation natural water EN 27 888, ASTM D 1125-95, linear
- 3-way isolation (input, output and voltage supply are electrically isolated from each other)
- DIN rail mounting
- Calibration timer
- Delivery including calibration certificate

Part number	Input	Output	Power supply	Price
00441865	2 x analog output, 1 x relay	2 x analog	DC 20 to 30 V	$618.26

PC Interface cable	Interface	Price
00301315	PC interface with converter RS232/TTL	$121.02
00456352	PC interface with converter USB/TTL	$236.76

JUMO Ammonia Sensitive Sensor (201040)



Features
- For monitoring ammonia leakage in refrigerating plants
- Special PTFE membrane
- Easy membrane replacement

Part number	Connector	Fitting length	Price
00440655	Screw cap Pg 13.5	120 mm	$584.37

JUMO tecLine Cl2

Sensor for free chlorine (202630)

Features
- Membrane-covered, amperometric measuring cell with integrated temperature compensation for continuous measurement of a suitable flow-through fitting
- Two electrode principle
- Easy calibration
- Integrated temperature compensation
- Proven measuring system
- Used for drinking water disinfection
- Used for swimming pool disinfection



Part number	Measuring range	Approx. pH range	Temperature range	Pressure range	Output	Power supply	Flow velocity	Flow rate	Accuracy	Material	Price
00401586	0 to 5 mg/L	± 5.5 to 8.0	> 32 to 113 °F > 0 to 45 °C	up to 1 bar	4 to 20mA (2-wire)	12 to 30V DC	± 15 cm/s	± 30 l/h	± 2 %	PVC	$1,527.67

JUMO digiLine

Intelligent Electronics with Digital Interface or Analog Output for pH/ORP/T (202705)



Features
- High quality industrial electrodes
- Process and industrial applications
- Pressure resistant up to 10 bar
- Additional temperature probe can be integrated
- Different fitting lengths

Part number	Type	Elec. connect. input	Output	Price
00652283	digiLine pH value	N cable socket	RS-485 Modbus	$496.91
00652284	digiLine pH value	N cable socket	Current value output, free config.	$578.23
00646871	digiLine hub			$232.58

JUMO ecoLine / JUMO BlackLine pH

Combination electrodes (201005/201010)



Features
High quality measuring probes
- Good value for money
- Variable fitting lengths

Part number	Active component	Connector	Fitting Length	Cable length	Price
00417300	UW glass (pH 0 to 12, 23 to 176 °F (0 to 80 °C))	BNC connector	120 mm	2 m	$156.85

JUMO tecLine pH

Combination electrodes (201020)



Features
- High quality industrial electrodes
- Process and industrial applications
- Pressure resistant up to 10 bar
- Additional temperature probe can be integrated
- Different fitting lengths

Part number	Temperature range	Connector	Fitting Length	Diaphragm	Price
00304030	HT glass (pH 0 to 14, 23 to 275 °F (-5 to 135 °C))	Screw cap Pg 13.5	120 mm	1 x zirconium	$201.65

JUMO tecLine H2O2 and PAA

Sensor for hydrogen peroxide and peracetic acid (202636)

Features

- Membrane-covered, amperometric measuring cell with integrated temperature compensation for continuous measurement of hydrogen peroxide in a suitable flow-through fitting
- Detection of peracetic acid or hydrogen peroxide concentration in the mg range
- The membrane is impervious to chemicals and surfactants
- Two electrode principle
- Easy calibration
- Integrated temperature compensation
- Proven measuring system



Part number	Measuring range	Temperature range	Pressure range	Output	Power supply	Flow velocity	Flow rate	Accuracy	Material	Price
00409343	0 to 10000 mg/L	> 32 to 113 °F > 0 to 45 °C	up to 1 bar	4 to 20mA (2-wire)	12 to 30V DC	± 15 cm/s	± 30 l/h	± 2 %	PVC	$1,831.01

JUMO Technical Buffer and Cleaning Solutions

(202950)

These solutions are used to clean and/or calibrate. For pH buffer solutions, various pH levels are available. The typical accuracy is +/-0.02 pH units. Color-coded bottle caps enable easy differentiation. JUMO buffer solutions are traceable to NIST (National Institute of Standards and Technology). The minimum durability and the batch number are specified on the label.



Part number	Type	Filling quantity	Price
00301072	Technical buffer solution pH 9.27	250 mL	$27.35
00301073	Redox test solution 468 mV	250 mL	$23.36
00306215	3-molar KCl solution	250 mL	$27.35
00307586	Diaphragm cleaner (thiourea solution)	250 mL	$23.36
00338371	Technical buffer solution pH 7.00	250 mL	$23.36
00344977	Technical buffer solution pH 4.00	250 mL	$23.36
00345027	Technical buffer solution pH 10.00	250 mL	$23.36
00346056	Conductivity calibration solution 1.41 mS/cm	250 mL	$23.36

General Terms and Conditions

The following terms and conditions govern the sales of all products (the "Products") manufactured by JUMO Process Control, Inc. ("JUMO") or its' Affiliates, (each, a "Seller"), as well as any service relating to such Products if applicable. "Affiliates" as used herein shall mean a business entity now or hereafter controlled by, controlling or under common control with JUMO. These terms and conditions of sale constitute the final, complete, and exclusive agreement between Buyer and Seller relating to the subject matter hereof and supersede all prior or contemporaneous proposals, understandings, representations, warranties, promises and other communications, whether oral or written, unless otherwise specifically agreed to in writing by an authorized representative of Seller. Any term or condition in any order, confirmation or other document furnished by Buyer that is in any way inconsistent herewith is hereby expressly rejected and Seller's acceptance of any offer or order of Buyer is expressly made in reliance of Buyer's assent to all terms and conditions hereof. Buyer's acceptance of delivery of any Products shall constitute Buyer's acceptance of these terms and conditions. In the event of conflict between the terms and conditions set forth herein and any other forms, purchase orders, documents or instruments of the Buyer, the provisions contained herein shall prevail.

1. PRICES

Prices applicable to the Products shall be as listed or quoted by Seller to Buyer and are F.O.B. Seller's U.S. warehouse unless otherwise specified. Seller's prices are subject to change without notice. Stenographic and clerical errors are subject to correction. Prices listed or quoted do not include any present or future federal, state, local, use, excise, transportation or similar taxes or other governmental charges, all of which shall be invoiced to and paid by the Buyer. Any such taxes or governmental charges paid by Seller on Buyer's behalf shall be reimbursed by Buyer on demand.

1.1 PURCHASE ORDER PROCESS; TERMS OF PAYMENT

Buyer shall place orders for the Products to be purchased hereunder by submitting one or more purchase orders to Seller. Each such purchase order is intended for convenience only and shall state the descriptions and quantities of Products being ordered and the requested shipments dates for such Products. In no event shall any terms and conditions set forth on a purchase order submitted by Buyer other than the terms and conditions set forth herein, including, without limitation, any preprinted terms and conditions of Buyer, be binding on Seller. In addition, no purchase order shall be binding on Seller until Seller has accepted such purchase order by written acknowledgement or by shipment of the Products applicable to such purchase order. Orders for the purchase of Products when made by the Buyer shall be considered irrevocable for such Buyer.

The purchase price of the Products shall be payable, without deduction of any kind, within thirty (30) days from the date of invoice, unless otherwise agreed to by Seller in writing. In the event Buyer has a blanket order in place with Seller for the recurring supply of Products over a period of time which is subject to discounted pricing (a "Blanket Order"), Buyer shall be responsible for prompt payment of all discounts received under the given period's Blanket Order, if Buyer has not by that given period's end purchased all items so pre-specified under the Buyer's Blanket Order for that period. The period on a Blanket Order shall be one (1) year unless otherwise specified in such Blanket Order.

1.2 SERVICE CHARGE

Interest at the rate of one and one-half percent (1 1/2%) per month (not to exceed the maximum interest allowable by law) shall be paid on the unpaid balance of any invoice not paid by Buyer within thirty (30) days of the due date thereof. Such interest shall be in addition to the purchase price hereunder. In the event Seller engages a collection agency or commences a legal action or suit to collect the purchase price or any part thereof, Buyer shall, in addition to the full purchase price including interest, be liable for all costs and expenses of such legal action or suit (including reasonable attorney's fees).

1.3 TITLE

Title to and risk of loss or damage to the Products shall pass to Buyer upon delivery of the Products to a carrier for shipment.

2. DELIVERY AND SHIPPING SCHEDULE

Shipment/delivery dates are approximate and are determined from the date as specified in Seller's acceptance of Buyer's order. Seller will make every effort to deliver the Products hereunder in accordance with the requested delivery date, provided that Seller shall not be liable for unavoidable delays in delivery caused indirectly or directly or in any manner by fires, flood, accidents, riots, acts of God, war, governmental interference, embargoes, strikes, labor difficulties, shortage of labor, fuel, power, materials or supplies, transportation delays or any other cause or causes (whether or not similar in nature to any of those specified herein) either beyond its control or which it cannot remedy without great economic hardship. Seller shall not be liable for any damages or penalties whatsoever whether direct or indirect, special, incidental or consequential, resulting from Seller's failure or the failure of its suppliers to perform or delay in performing unless otherwise agreed in writing by an authorized officer of Seller. Buyer agrees that any delay in delivery shall not affect the validity of any orders or these terms and conditions.

Seller reserves the right to deliver Products in installments unless expressly prohibited in an applicable purchase order. Installment deliveries will be invoiced by Seller at time of shipment unless otherwise agreed to by Seller. Delay in any installment delivery shall not relieve Buyer of its obligation to accept all remaining installment deliveries pursuant to a purchase order.

3. RETURNS

No returns will be accepted by the Seller for any reason without prior authorization from Seller and Buyer's receipt of a "Return Material Authorization Number" from Seller in accordance with Seller's "Return Material Authorization Terms and Conditions", which are incorporated herein and made a part hereof (the "RMA Terms and Conditions").

Products, which have not been used or modified, as determined by Seller, may be returned to Seller for a refund provided that a $100 or a twenty percent (20%) restocking charge on the applicable purchase price for such Product(s), whichever is greater, shall apply. For controllers, recorders, programmable transmitters and indicators only, such Products may be returned if not permanently modified, for a minimum $150 or thirty percent (30%) restocking charge. All stock and modified-stock Products shall require Seller's prior authorization to be returned and must be returned within one hundred twenty (120) days from the date of delivery. Products for which the packaging seal has been broken may only be returned if agreed to by Seller, in Seller's sole discretion. Non-stock Products (i.e. "Specialized Products"), Seller's software products and accessories may not be returned under any condition.

4. LIMITED WARRANTY; DISCLAIMERS

Seller warrants that the Products described herein are free from defects in material and workmanship. The foregoing warranty shall extend to the first ultimate user only for the Product for a period of one (1) year from the date of shipment (the "Warranty Period"), provided the Products: (i) have been properly cared for (i.e. the Products have not been subject to misuse, neglect, misapplication etc.); (ii) have been properly installed, operated and maintained in accordance with Seller's instructions, if any; (iii) have not been tampered with or modified without Seller's prior written approval; and (iv) Buyer promptly notifies Seller in writing of any warranty claim during the Warranty Period. The warranty provided by Seller in this Section 4 is the only warranty provided by Seller with respect to the Product(s) sold hereunder, and may be modified or amended only by a written instrument signed by Seller. In the event any Product fails to meet the warranty in this Section 4 during the Warranty Period, Buyer shall return the allegedly defective Products to Seller at Buyer's expense and risk in accordance with the RMA Terms and Conditions. All returned Products shall be returned with shipping prepaid. The Seller's sole obligation under this warranty shall be limited to, at Seller's option, to either repairing or replacing the non-conforming Product or issuing a credit in the amount of the purchase price for the non- conforming Product. Upon written agreement with Buyer, Seller may repair defective Products at Buyer's premises and Buyer shall pay all reasonable expenses incurred by Seller in connection thereto, including, without limitation, Seller's reasonable travel expenses.

Seller's warranty does not apply to Products not manufactured by Seller and do not apply to components furnished by third parties. Any components furnished by third parties are warranted only to the extent of the original manufacturer's warranty and then only if such original manufacturer's warranty is assignable to Buyer.

THE EXPRESS WARRANTY OF SELLER CONTAINED HEREIN IS EXCLUSIVE AND EXPRESSLY IN LIEU OF ALL OTHER WARRANTIES, WRITTEN, ORAL, IMPLIED OR STATUTORY, INCLUDING BUT NOT LIMITED TO EXPRESS OR IMPLIED WARRANTIES OF MERCHANTABILITY OR OF FITNESS FOR A PARTICULAR PURPOSE. SELLER'S WARRANTY OBLIGATIONS AND BUYER'S REMEDIES ARE SOLELY AND EXCLUSIVELY AS STATED IN THIS SECTION 4.

Notwithstanding anything to the contrary contained herein, Seller's aggregate liability in connection with the sale or use of

Product(s) hereunder, regardless of the form of action giving rise to such liability (whether in contract, tort or otherwise), shall not exceed the aggregate purchase price for Products paid by Buyer to Seller pursuant to an applicable order. IN ADDITION, SELLER SHALL NOT BE LIABLE FOR ANY LOSS, DAMAGE OR INJURY OF ANY NATURE, WHETHER DIRECT, INDIRECT OR CONSEQUENTIAL (INCLUDING, WITHOUT LIMITATION, LOSS OF PROFITS OR REVENUE, LOSS OF USE OF EQUIPMENT OR ANY OTHER EQUIPMENT, COST OF CAPITAL, COST OF SUBSTITUTE EQUIPMENT, FACILITIES OR SERVICES, DOWNTIME COSTS, OR CLAIMS OF CUSTOMERS OF BUYER FOR SUCH DAMAGES EVEN IF SELLER HAS BEEN INFORMED OF THE POSSIBILITY OF SUCH DAMAGE OR LOSS BY BUYER OR ANY THIRD PARTY) AND OTHER RISK(S) IN CONNECTION WITH OR RESULTING FROM USE OF THE PRODUCTS. THE FOREGOING STATES THE ENTIRE LIABILITY OF SELLER WITH REGARD TO THE SALE OF PRODUCTS HEREUNDER. THE LIMITATIONS CONTAINED IN THIS SECTION 4 ARE A FUNDAMENTAL PART OF THE BASIS FOR SELLER'S BARGAIN HEREUNDER, AND SELLER WOULD NOT ENTER INTO AN AGREEMENT WITH BUYER ABSENT SUCH LIMITATIONS.

5. CANCELLATION

Seller shall have the right to cancel an order if at any time Buyer does not strictly comply with all the terms and conditions contained herein or if Buyers credit standing is at any time disapproved by Seller, in Seller's reasonable determination, by giving written notice of such decision to Buyer. Orders may be cancelled by Buyer only with the written consent of Seller at Seller's sole discretion and upon reimbursement to Seller for any and all expenses and other losses incurred by Seller as a result of such cancellation, including Seller's actual out of pocket costs, overhead and anticipated profit. Partial cancellation of an order may result in adjustment of prices for the balance of the order.

6. INTELLECTUAL PROPERTY INDEMNITY

Buyer shall immediately inform Seller of any action or proceeding commenced against Buyer or to which Buyer is made a party based on a claim that a Product infringes a United States patent, copyright or trademark and shall cooperate in good faith with Seller in dealing with such claims and in the pursuance of its rights. Buyer shall indemnify and hold Seller harmless from all claims, liabilities, damages, costs and expenses incurred in connection with any action or proceeding commenced against Seller or to which Seller is made a party, relating in any manner to Buyer's purchase, possession or use of the Products, (including but not limited to any claims, damages and expenses asserted or brought against Seller based on the alleged infringement of any intellectual property contributed by Buyer to Seller or improper use of a third party's intellectual property rights by Buyer), except only to the extent it is determined that Seller's gross negligence has directly caused any damages to the party or parties seeking recovery for the same.

7. GENERAL

No agent, salesman or distributor has any authority to obligate Seller with regard to any terms or conditions not contained herein.

Buyer shall advise Seller immediately of anything contained herein to which Buyer does not assent as a term or condition governing transactions between Buyer and Seller.

The laws of the State of New York shall apply to these terms and conditions and govern all transactions between Buyer and Seller. The federal and state courts located within Onondaga County, New York shall have exclusive jurisdiction to determine any and all actions and proceedings relating to or arising from the terms and conditions set forth herein and the sale of Product(s) hereunder and each party hereby irrevocably consents to the personal and subject matter jurisdiction of such courts with respect thereto.

The failure of either party to insist upon strict performance of any provision of the terms and conditions set forth herein, or to exercise any right provided for herein, shall not be deemed a waiver for the future of such provision or right, and no waiver of any provision or right shall affect the right of the waiving party to enforce any other provision or right herein.

In the event any provision or provisions herein, or parts thereof, shall be held to be invalid, illegal or unenforceable, the validity, legality and enforceability of the remaining provisions shall not in any way be affected or impaired and shall remain in full force and effect.

Additional Terms and Conditions for Specialized Products

Specialized Products:

"Specialized Products" are those non-stock Products manufactured or furnished by Seller in accordance with drawings, samples or manufacturing specifications designated by Buyer.

Engineering Charge:

All Specialized Products shall be subject to an engineering charge to be applied or included in the price of such Products, as quoted by Seller. No discounts shall be afforded to an engineering charge.

Order Changes:

Buyer shall notify Seller in writing of requested changes in the quantity, drawings, designs or specifications for any Specialized Products, which are ordered but not yet in the process of manufacture. After receipt of such notice, Seller will inform Buyer of any adjustments to be made in price, delivery schedules, etc. resulting from Buyer's requested changes prior to incorporating requested changes into manufactured Specialized Products. Changes in materials, supplies, labor and/or changes made at the request of the Buyer shall be at the expense of the Buyer. Written notice of any requested changes must be delivered to Seller not less than sixty (60) days prior to scheduled shipping date.

Prototypes:

If Buyer orders a "Prototype" of a Specialized Product, Seller makes no guarantees, warranties or representations with respect to such Prototype. Buyer shall have the duty and sole responsibility to test a Prototype for suitability and acceptance prior to production of Specialized Products that are based on Prototype designs.

Warranty and Indemnification by Buyer:

Buyer hereby represents and warranty to Seller that any Specialized Products when built to Buyer's specifications, do not and will not infringe any rights of any third party, of any kind or nature. Buyer shall indemnify, defend and hold Seller harmless from all claims of any nature asserted or brought against Seller resulting from a breach of Buyer's warranty hereunder.

RETURN MATERIAL AUTHORIZATION ("RMA") TERMS AND CONDITIONS

INSTRUCTIONS:
In an effort to provide better service and expedite repairs, the following terms and conditions shall apply to all requests for repairs of JUMO products (the "Product(s)") from JUMO Process Control, Inc. or its affiliates (each a "Seller"). Please complete the Request for Return Material Authorization form for each Product being returned and fax it back to us. Seller will issue an RMA# upon receipt of the completed form and fax it back to you, where the form must be included with the returned Product. For dead-on-arrival (DOA) and warranty repair, please fax copies of the applicable invoice(s) with serial number(s) for the subject Products.

DOA:
DOA periods are determined by Seller and may change without notice. The current DOA period is three (3) business days after a Product is delivered to Buyer by Seller. If a Product is found to be defective "out of the box" during the DOA period, Seller, at its option, may replace it from stock, if available, or repair it at our expense. Upon receipt of a non-conforming Product that is alleged to be DOA, Seller will evaluate the Product, and if it is determined that any issue with the Product is not the result of a manufacturing defect with the Product, the Buyer will be charged for Seller's evaluation of the Product and/or the repair of the Product. If a Product is found to have a manufacturing defect, Seller, in its sole discretion, may issue a credit for the returned Product or repair or replace it with like product, as reasonably determined by Seller.

WARRANTY:
Products that have been in use beyond the DOA period and alleged to be non-conforming within the one (1) year warranty period for said Product, as further set forth in Seller's General Terms and Conditions of Sale, will likewise be evaluated by Seller and shall be either repaired or replaced, at Seller's option, if found by Seller to be non-conforming in accordance with Seller's warranty. Buyer will be advised of the warranty status of its' Product when the RMA number is issued. Products purchased directly from Seller and/or its authorized distributors are warranted for a period of 1 year from the date of shipment from Seller. Products purchased through OEM's are warranted for a period of 1 year from the date it is shipped to the OEM. Products purchased elsewhere or contained in OEM equipment not purchased through Seller may be subject to original manufacturing warranties. Please refer to Seller's General Terms and Conditions of Sale for the scope of Seller's warranty and disclaimers. Issuance of an RMA does not guarantee that a Product is under warranty.

Products that have had their serial numbers or part numbers removed, altered or are unreadable shall not be accepted for warranty repair and/or replacement.

NO FAULT FOUND:
Products returned as defective, but found to have no problems may incur a NO FAULT FOUND FEE of a minimum of $150.00. Normal routine user adjustments, maintenance, calibration, cleaning and programming are NOT covered under warranty.

OUT OF WARRANTY:
A minimum diagnostic fee of $150.00 will be charged for all non-warranty repairs. Buyer will be given a repair estimate before further charges are incurred.

SHIPPING:
All returns must be shipped by Buyer freight and insurance prepaid. Items that are freight collect, and items without an RMA number will not be accepted. Damage or loss of goods during shipment is the Buyer's responsibility. Please carefully package your return merchandise. Warranty repaired or replaced products will be shipped return freight free via UPS ground delivery. Shipping and handling charges will apply to non-warranty shipments. Air or overnight shipping costs is the responsibility of the Buyer.

NOTE:
All DOA products must be returned complete in original factory condition and packaging, with all boxes, accessories, manuals, warranty cards, cables and anti-static bags. Products must be clean, without scratches or usage marks. Place the manufacturer's box inside a shipping box to avoid damage to the original packaging. Write the RMA number on the shipping label. Do not write on the product box. A 10% re-box and repackaging fee is charged for any manufacturers box that is not returned in re-sellable condition. Seller will be entitled to charge for all other items that are missing, damaged, or do not meet the above conditions, plus a minimum 20% restocking fee to cover labor, processing and shipping costs.

OTHER RIGHTS:
Nothing herein shall otherwise limit any of the standard terms and conditions, including, warranties or limitations, as set forth in Seller's General Terms and Conditions of Sale which shall continue to apply to the Products.

Revised October 2022

JUMO Process Control, Inc.
6724 Joy Road
East Syracuse, New York 13057

Tel: (315) 437-5866

Email: info.us@jumo.net

www.jumousa.com

JUMO USA STOCK EN/2024-04-01

Photo credits: JUMO